CONSTRUCTION PLAN SUBMITTAL FOR:

DEWITT KNIGHTDALE MIXED-USE

901 PARKSTONE TOWNE BOULEVARD
KNIGHTDALE, NC 27545
TOWN OF KNIGHTDALE PROJECT #ZMA-15-21
ORDINANCE #23-02-15-004
PERMIT NUMBER: SEC-000015-2023

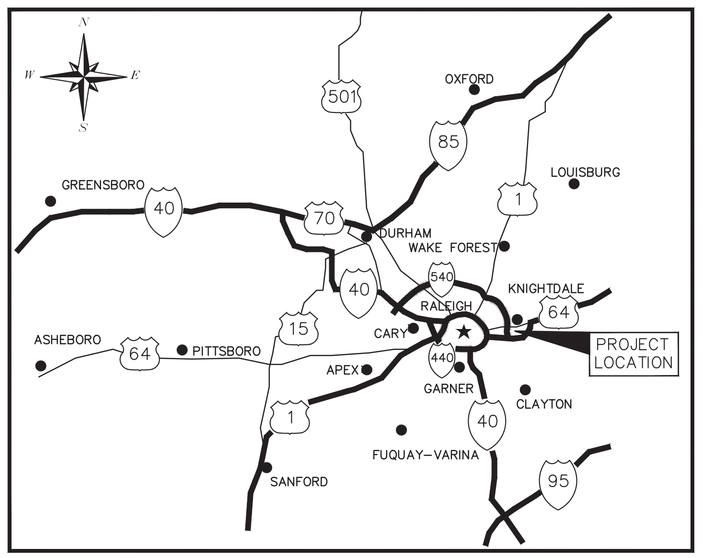

PROJECT LOCATION
NTS

PUBLIC IMPROVEMENT QUANTITIES	
SIDEWALK	890 LF
CURB & GUTTER	1,480 LF
STREETS	1,480 LF
STORM DRAINAGE	20 LF
WATER LINE	N/A
WATER STUBS	4
SANITARY SEWER	22 LF
SEWER STUBS	9

ATTENTION CONTRACTORS

The **Construction Contractor** responsible for the extension of water, sewer, and/or reuse, as approved in these plans, is responsible for contacting the **Public Works Department** at (919) 217-2250, and the **Public Utilities Department** at (919) 996-4540 at least **twenty four hours** prior to beginning any of their construction.

Failure to notify both **City Departments** in advance of beginning construction, will result in the issuance of **monetary fines,** and require reinstallation of any water or sewer facilities not inspected as a result of this notification failure.

Failure to call for **Inspection, Install a Downstream Plug,** have **Permitted Plans** on the **Jobsite,** or any other **Violation** of **City of Raleigh Standards** will result in a **Fine and Possible Exclusion** from future work in the City of Raleigh.

ALL CONSTRUCTION TO BE IN ACCORDANCE WITH ALL TOWN OF KNIGHTDALE, CORPUD AND/OR NCDOT STANDARDS AND SPECIFICATIONS.

SITE PERMITTING APPROVAL

Water and Sewer Permits (If applicable)

The City of Raleigh consents to the connection and extension of the City's **Public Sewer System** as shown on this plan. The material and Construction methods used for this project shall conform to the standards and specifications of the City's Public Utilities Handbook. **City of Raleigh Public Utilities Department Permit #** S-5449(P)

The City of Raleigh consents to the connection and extension of the City's **Public Water System** as shown on this plan. The material and Construction methods used for this project shall conform to the standards and specifications of the City's Public Utilities Handbook. **City of Raleigh Public Utilities Department Permit #** _____

The City of Raleigh consents to the connection to its public sewer system and extension of the **private sewer collection** system as shown on this plan. The material and constructions methods used for this project shall conform to the standards and specifications of the City's Public Utilities Handbook.

City of Raleigh Public Utilities Department Permit # S-5449(P)

CITY OF RALEIGH - PLANS AUTHORIZED FOR CONSTRUCTION

Electronic Approval: This approval is being issued electronically. This approval is valid only upon the signature of a City of Raleigh Review Officer below. The City will retain a copy of the approved plans. Any work authorized by this approval must proceed in accordance with the plans kept on file with the City. This electronic approval may not be edited once issued. Any modification to this approval once issued will invalidate this approval.

City of Raleigh Development Approval — Cydney S. Terry — Digitally signed by Cydney S. Terry DN: C=US, E=cydney.terry@raleighnc.gov, O=City of Raleigh, CN=Cydney S. Terry Reason: I am approving this document Date: 2024.04.17 10:58:19-04'00'

Raleigh Water Review Officer

ZMA-15-21 CONDITIONS
- Building 5 as indicated on the Master Plan shall exceed the maximum front setback for multi-family buildings from the right-of-way.
- Interior parking lot islands serving hte hotel shall be minimized, as indicated on the Master Plan.
- Sidewalks at the foundation of the hotel shall be a minimum of five feet as indicated on the Master plan.
- The hotel parking lot drive isles with a minimum width of 22-feet and parking spaces a minimum of 18-feet long.
- A total of 97,418 square feet of recreational open space shall be provided as indicated on the Master Plan.
- The site shall provide a distribution of uses consisting of 290 multi-family units and 29,200 square feet of commercial space.
- Main Street streetscape elements shall be extended along the public right-of-way frontage of Building 5.
- Additional traffic calming measures shall be included following review by Development Services and Engineering Staff.
- Two additional Electric Vehicle Charging Stations shall be installed in the parking lot adjacent to the retail store fronts.
- Public art shall be installed on both sides of Parkstone Towne Blvd.

a. Town Approved Standards Shall Control. In the event of a conflict or inconsistency between these construction drawings and the Town of Knightdale's Approved Standards for this project, the Approved Standards shall control. Town of Knightdale Approved Standards shall mean all development documents necessary for approval for the Property including, but not limited to, any special use permit, subdivision plan, site plan, subdivision plat(s), phasing schedule, Development Agreement, Utility Allocation Agreement, Annexation Agreement, the Town of Knightdale Standard Specification and Details Manual and applicable provisions of the North Carolina State Building Code.

b. Professional Design Engineer Certification. These improvements shall be constructed in accordance with the following drawings and with the Standard Specifications of the Town of Knightdale.

I, _____, PE, certify that the Standard Specifications of the Town of Knightdale have been thoroughly checked and found to be applicable to this project. All exceptions to the applicable Town standards have been previously approved by the Town of Knightdale and said exceptions are shown on Sheet(s) _____ of these drawings.

Seal By: _____, PE
Date: _____

a. Town Certification. This design has been reviewed by the Engineer for the Town of Knightdale, and to the best of my knowledge and belief, it conforms to the requirements established in the Standard Specifications of the Town of Knightdale.

By: Samuel A. MacDonald — Digitally signed by Samuel A. MacDonald DN: C=US, E=samuel.macdonald@knightdalenc.gov, O=Town of Knightdale, CN=Samuel A. MacDonald Reason: I am approving this document Date: 2024.04.15 09:54:58-04'00' Date: _____
Town Engineer

These plans are approved by the Town of Knightdale and serve as construction plans for this project.

By: Kevin Lewis — Digitally signed by Kevin Lewis DN: C=US, E=kevin.lewis@knightdalenc.gov, O=Town of Knightdale, CN=Kevin Lewis Reason: I am approving this document Date: 2024.04.15 10:25:41-04'00' Date: _____
Administrator

EROSION AND SEDIMENT CONTROL
APPROVED PLAN
DATE: _____
PERMIT NO. SEC-____-____
Town of Knightdale Public Works
Sedimentation & Erosion Control
(919) 217-2250

KNIGHTDALE — EFFECTIVE: 05/16/2022

Town of Knightdale Construction Inspector Signature

3

SITE DATA	
EXISTING USE:	UNDEVELOPED
ZONING:	NMX-PUD
PROPOSED USE:	MIXED USE (MULTI-FAMILY RESIDENTIAL, COMMERCIAL)
TOTAL SITE AREA:	11.02 ACRES
PROPERTY SETBACKS:	PRIMARY STREET = 10' ADJACENT TO UR-12 OR RMX = 10' ADJACENT TO GRB = 30' ADJACENT TO NMX OR HB = 0'
DISTURBED AREA:	12.00 ACRES
PROJECT DATA	
PIN#	1744-85-4115
MIXED-USE PROPOSED # OF BUILDINGS BUILDING LOT COVERAGE VEHICULAR SURFACE AREA	5 (105,250 GSF TOTAL) 21.92% (105,250 SF/480,153 SF) 36.51% (175,322 SF/480,153 SF)
PARKING	COMMERCIAL: TOTAL RETAIL = 29,200 SF MAXIMUM: 6 PER KSF OF GFA =29.2 KSF RETAIL * 6 = 175 SPACES MINIMUM: 1/2 OF MAXIMUM=88 SPACES RESIDENTIAL MAXIMUM: 1.5 SPACES PER BED UP TO 3 PER UNIT 1 BED: 114 UNITS = 171 SPACES 2-3 BED: 177 UNITS = 531 SPACES TOTAL RESIDENTIAL MAXIMUM = 702 SPACES MINIMUM:1/2 OF MAXIMUM=351 SPACES MINIMUM ELECTRIC VEHICLE CHARGING STATIONS REQUIRED: 10 STATIONS MAXIMUM ALLOWED: 877 SPACES MINIMUM REQUIRED: 439 SPACES TOTAL PARKING PROVIDED: 535 SPACES (INCLUDES 10 ADA AND 10 EV) TOTAL GARAGES PROVIDED: 48
ON-STREET PARKING PROVIDED:	40 SPACES
TOTAL PARKING PROVIDED:	575 SPACES
ACCESIBLE PARKING:	REQUIRED SPACES = 14 (INCLUDING 2 VAN SPACES) PROVIDED ADA: 15 SPACES PROVIDED VAN: 2 SPACES
BIKE PARKING	COMMERCIAL: 1 PER EVERY 10 CAR SPACES 88 CAR SPACES = 9 BIKE SPACES RESIDENTIAL 1 PER EVERY 20 CAR SPACES 447 CAR SPACES = 23 BIKE SPACES TOTAL REQUIRED: 32 SPACES TOTAL PROVIDED: 32 SPACES
ALLOWABLE IMPERVIOUS AREA TO POND 2	22.28 AC
EX. IMPERVIOUS AREA PROP. MIXED-USE IMP. AREA	9.57 AC 7.98 AC
REMAINING ADDITIONAL IMPERVIOUS AREA ALLOWED FOR POND 2	5.23 AC
OPEN SPACE ACREAGE:	REQUIRED RECREATIONAL OPEN SPACE: 97,418 SF REQUIRED ACTIVE OPEN SPACE (50% MIN): 97,418 SF TOTAL PROVIDED ACTIVE OPEN SPACE: 42,640 SF (51% OF REQUIRED) REQUIRED PASSIVE OPEN SPACE (UPTO 50%): 97,418 SF TOTAL PROVIDED PASSIVE OPEN SPACE: 58,140 SF (69% OF REQUIRED) TOTAL PROVIDED OPEN SPACE: 100,780 SF (103% OF REQUIRED)
TOTAL NUMBER OF PARCELS:	ONE (1)
TOTAL NUMBER OF HOUSING UNITS:	291
GROSS PROJECT DENSITY PER ACRE:	26.32
CONTROL POINT:	NCGS "GORE" ELEV: 324.31 NORTHING: 745865.08 EASTING: 2151017.85

NOTE: A DRAFT OF THE PROJECT'S PLAT IS TO BE SUBMITTED TO CORPUD FOR REVIEW AND APPROVAL PRIOR TO RECORDING OF THE PLAT. UTILITY BUILDING PERMITS WILL BE ISSUED BY THE TOWN UPON PLAT APPROVAL.

PROPOSED WATER ALLOCATION POLICY POINTS (AWARDED AT TIME OF OVERALL PARKSTONE MASTER PLAN/REZONING APPROVAL)
- MIXTURE OF USE DEVELOPMENT – 41 PTS.
- CLUBHOUSE <4000 S.F. W/ FULL KITCHEN – 9 PTS.

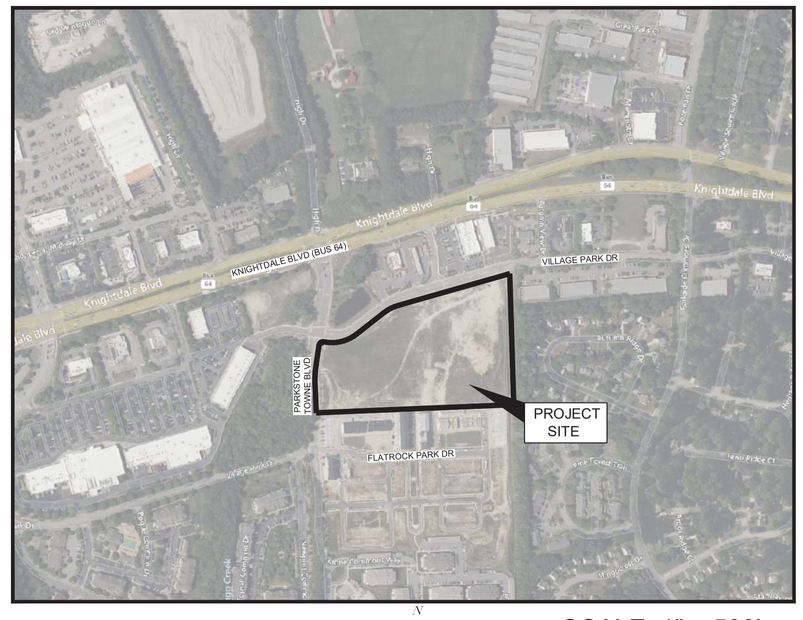

VICINITY MAP

N
W E
S

SCALE: 1" = 500'

Sheet List Table

Sheet Number	Sheet Title
C0.0	COVER SHEET
C0.1	GENERAL NOTES
C1.0	EXISTING CONDITIONS AND DEMOLITION PLAN
C2.0	SITE PLAN
C2.1	SIGNAGE AND PAVEMENT MARKING PLAN
C3.0	EROSION CONTROL PHASE 1
C3.1	EROSION CONTROL PHASE 2
C3.2	EROSION CONTROL PHASE 3
C4.0	GRADING AND DRAINAGE PLAN
C5.0	UTILITY PLAN
C5.1	UTILITY PLAN & PROFILE
C6.0	SITE DETAILS
C6.1	SITE DETAILS
C7.0	STORM DRAINAGE DETAILS
C8.0	UTILITY DETAILS
C8.1	UTILITY DETAILS
C9.0	EROSION CONTROL DETAILS
C9.1	EROSION CONTROL DETAILS
C9.2	EROSION CONTROL DETAILS
C10.0	EXISTING WET POND (FOR REFERENCE ONLY)
LS1.0	LANDSCAPE PLAN
LS1.1	PLANTING SCHEDULES
LS2.0	LANDSCAPE DETAILS
LS3.0	OPEN SPACE PLAN
LS3.1	OPEN SPACE DETAILS
I2.0	LIGHTING DETAILS
A1	BUILDING ELEVATIONS

This document, together with the concepts and designs presented herein, as an instrument of services, is intended only for the specific purpose and client for which it was prepared. Reuse of and improper reliance on this document without written authorization and adaptation by Kimley-Horn and Associates, Inc. shall be without liability to Kimley-Horn and Associates, Inc.

Copyright Kimley-Horn and Associates, Inc., 2023

SEAL:

JUNE 26, 2023

JOB NUMBER: 017254013

PROJECT OWNER AND CONSULTANT

SITE DEVELOPER:
KNIGHTDALE DEVELOPMENT COMPANY LLC AND WIDEWATERS KNIGHTDALE II COMPANY
5845 WIDEWATERS PARKWAY
SUITE 100
EAST SYRACUSE, NY 13057
PHONE: (704) 746-9844
ATTN: ERIC CANDEE
ecandee@widewaters.com

CIVIL ENGINEER:
KIMLEY-HORN AND ASSOCIATES, INC.
421 FAYETTEVILLE ST., SUITE 600
RALEIGH, NORTH CAROLINA 27601
PHONE: (919) 653-2927
ATTN.: CHRIS BOSTIC, P.E.
chris.bostic@kimley-horn.com

LANDSCAPE ARCHITECT:
KIMLEY-HORN AND ASSOCIATES, INC.
421 FAYETTEVILLE ST., SUITE 600
RALEIGH, NORTH CAROLINA 27601
PHONE: (919) 653-2945
ATTN.: RICHARD BROWN , PLA
richard.brown@kimley-horn.com

SURVEYOR:
RWK, P.A.
101 W. MAIN ST., SUITE 202
GARNER, NC 27529
PHONE: (919) 779-4854
ATTN.: CHUCK PIRATZKY
cpiratzky@rwkpa.com

PREPARED IN THE OFFICE OF:

Kimley»Horn

© 2023 Kimley-Horn and Associates, Inc.

421 FAYETTEVILLE STREET – SUITE 600 – RALEIGH, NORTH CAROLINA 27601
PHONE: (919) 677-2000

NC CERTIFICATE OF AUTHORIZATION: F-0102

No.	REVISIONS	DATE	BY
4	REVISED PER TOK COMMENTS	04/19/24	MDB
3	REVISED PER TOK COMMENTS	02/27/24	MDB
2	REVISED PER TOK COMMENTS	01/12/24	DPM
1	REVISED PER TOK COMMENTS	9/12/23	ASA

Kimley»Horn
© 2023 KIMLEY-HORN AND ASSOCIATES, INC.
421 FAYETTEVILLE STREET, SUITE 600, RALEIGH, NC 27601
PHONE: 919-677-2000 FAX: 919-677-2050
WWW.KIMLEY-HORN.COM
#F-0102

NORTH CAROLINA PROFESSIONAL ENGINEER SEAL 052434 TIMOTHY R. CARTER
4/25/2024

KHA PROJECT 017254013
DATE 06/26/2023
SCALE AS SHOWN
DESIGNED BY KEJ
DRAWN BY KEJ
CHECKED BY COB

COVER SHEET

DEWITT KNIGHTDALE
PREPARED FOR WIDEWATERS
TOWN OF KNIGHTDALE NORTH CAROLINA

SHEET NUMBER C0.0

Plotted By: Barnes, Michael Sheet Set: DeWitt Knightdale Layout: C0.0 COVER SHEET April 24, 2024 04:54:59pm K:\RAL_DEV\017254013_DeWitt Knightdale\Planning Phase\15_CAD Files\PlanSheets\C0.0 COVER SHEET.dwg
This document, together with the concepts and designs presented herein, as an instrument of service, is intended only for the specific purpose and client for which it was prepared. Reuse of and improper reliance on this document without written authorization and adaptation by Kimley-Horn and Associates, Inc. shall be without liability to Kimley-Horn and Associates, Inc.

GEOTECHNICAL NOTES

- THE CONTRACTOR IS RESPONSIBLE TO DO HIS OWN TAKEOFFS TO DETERMINE AMOUNTS OF CUT AND FILL, AND THE COST FOR BRINGING THE SITE TO THE LINES SHOWN ON THE PLANS IS TO BE INCLUDED IN THE BASE BID. AN ALLOWANCE IS INCLUDED IN THE CONTRACT AMOUNT FOR THE BLASTING OR RIPPING OF ROCK FOR BULK EXCAVATION AND TRENCH ROCK. THE CONTRACT AMOUNT WILL BE ADJUSTED UP OR DOWN FROM THE ROCK ALLOWANCE(S) AND APPROVED UNDERCUT AT THE UNIT RATES ESTABLISHED IN THE CONTRACT. ALL ROCK QUANTITY ADJUSTMENTS WILL BE MADE ON THE BASIS OF BANK YARDS AS OPPOSED TO TRUCK COUNTS UNLESS OTHERWISE ALLOWED BY THE OWNER. IF TRUCK COUNTS ARE ALLOWED, THE CONTRACTOR, OWNER, AND ENGINEER WILL AGREE ON THE NUMBER OF BANK YARDS PER TYPE OF TRUCK PRIOR TO THE START OF THE WORK AND THE ENGINEER WILL PERIODICALLY CHECK RANDOM TRUCKS TO VERIFY THEY ARE BEING LOADED IN A MANNER REPRESENTATIVE OF WHAT WAS ASSUMED WHEN DEVELOPING THE ESTIMATED LOAD VOLUMES. THE PHYSICAL DIMENSIONS OF THE TRUCK BED WILL NOT BE USED TO COMPUTE YARDS PER TRUCK LOAD.
- DIFFICULT EXCAVATION WILL BE DETERMINED AS DEFINED IN THE PROJECT SPECIFICATIONS AND THE CONTRACTOR WILL BE REQUIRED TO DEMONSTRATE DIFFICULT EXCAVATION WITH THE APPROPRIATE TYPE AND SIZE EQUIPMENT OR AS OTHERWISE DIRECTED BY THE ENGINEER BEFORE MATERIAL IS CLASSIFIED AS DIFFICULT EXCAVATION. IN THE CASE OF DIFFICULT TRENCH EXCAVATION, THE PAY LINES WILL BE THE NOMINAL DIAMETER OF THE PIPE PLUS 24 INCHES BUT NOT LESS THAN 4 FEET AND THE PAY DEPTH WILL EXTEND TO 6 INCHES BELOW DESIGN INVERT REGARDLESS HOW DEEP OR WIDE THE AREA IS SHOT. THE CONTRACTOR WILL BE RESPONSIBLE TO REPAIR ANY GROUND DAMAGED BY BLASTING TO THE SATISFACTION OF THE ENGINEER AT NO ADDITIONAL COST TO THE OWNER. IF DIFFICULT EXCAVATION MATERIAL IS UNDERLAIN BY SOIL WHICH CAN BE REMOVED WITH CONVENTIONAL EQUIPMENT WITHOUT RESORTING TO DIFFICULT EXCAVATION METHODS, ONLY THE LAYER OF MATERIAL CLASSIFIED AS DIFFICULT EXCAVATION WILL BE CLASSIFIED AS DIFFICULT EXCAVATION.
- MASS ROCK IS DEFINED AS MATERIAL WHICH CANNOT BE REMOVED WITH REASONABLE EFFORT, AS DEFINED BY THE ENGINEER, USING A D-8 DOZER WITH A SINGLE TOOTH RIPPER. TRENCH ROCK IS DEFINED AS MATERIAL WHICH CANNOT BE REMOVED WITH REASONABLE EFFORT, AS DEFINED BY THE ENGINEER, USING A CAT 330 OR EQUIVALENT TRACKHOE WITH A 3-FOOT WIDE BUCKET AND CARBIDE BULLET TEETH.
- SOIL WHICH IS SUITABLE EXCEPT THAT IT IS TOO WET WILL NOT BE DEEMED UNSUITABLE AND THE CONTRACTOR WILL BE EXPECTED TO PROVIDE EQUIPMENT TO MOISTURE CONDITION THE SOIL AND TO EXPEND THE TIME AND EFFORT NECESSARY TO ACHIEVE THE REQUIREMENTS IN THE SPECIFICATIONS AT NO ADDITIONAL COST TO THE OWNER. THERE WILL BE NO ADDITIONAL PAYMENT FOR MANIPULATING THE SOIL TO MODIFY THE MOISTURE CONTENT.
- THE CONTRACTOR IS TO PROVIDE A FARM TRACTOR AND DISK CAPABLE OF TURNING THE SOIL TO A DEPTH OF 12 INCHES ON EACH PASS. DURING DRYING OPERATIONS, THE CONTRACTOR WILL TURN THE SOIL EVERY 30 TO 45 MINUTES DURING TIMES OF FAVORABLE WEATHER. AT THE END OF THE DAY AND PRIOR TO PREDICTED RAIN EVENTS, THE CONTRACTOR WILL SEAL THE SURFACE OF THE FILL AND AREAS BEING DRIED WITH A DISK WITH A SMOOTH DRUM ROLLER. THE COST TO BLADE BACK 12 TO 18 INCHES OF SOIL, MOISTURE CONDITION THE REMAINING SOIL AND TO COMPACT THAT MATERIAL AND THEN PROPERLY COMPACT THE REMOVED SOIL IN ISOLATED AREAS WHERE DEEMED NECESSARY ON THE BASIS OF PROOF ROLLING BY THE ENGINEER IS TO BE INCLUDED IN THE BASE BID AND THERE WILL BE NO ADDITIONAL PAYMENT FOR THAT WORK.
- ALL CLASSIFIED ITEMS ENCOUNTERED ARE TO BE DOCUMENTED EACH DAY BY THE OWNER'S REPRESENTATIVE AND THERE WILL BE NO PAYMENT FOR ANY CHANGE ORDERS FOR UNDERCUT OR DIFFICULT EXCAVATION NOT SUPPORTED BY A FIELD REPORT FROM THE OWNER'S REPRESENTATIVE. ANY DEWATERING REQUIRED TO COMPLETE THE WORK SHOWN ON THE DRAWINGS IS TO BE INCLUDED IN THE BASE BID COST AND THERE WILL BE NO ADDITIONAL PAYMENT FOR DEWATERING. IF THE ENGINEER DIRECTS THE CONTRACTOR TO INSTALL PERMANENT FRENCH DRAINS NOT SHOWN ON THE PLANS, THE ADDITIONAL DRAINS WILL BE PAID FOR AS A CHANGE ORDER. THE CHANGE ORDER IS TO BE EXECUTED BEFORE THE ADDITIONAL DRAINS, IF ANY ARE INSTALLED OR THERE WILL BE NO PAYMENT FOR THOSE DRAINS.

GENERAL NOTES

1. A PRE-CONSTRUCTION MEETING WITH TOWN OF KNIGHTDALE, SITE CONTRACTOR, AND SUB-CONTRACTORS IS REQUIRED TO OCCUR PRIOR TO BEGINNING SITE GRADING.
2. CONTRACTOR SHALL REFER TO ARCHITECTURAL PLANS FOR PRECISE BUILDING DIMENSIONS, BUILDING UTILITY ENTRANCE LOCATIONS, AND EXACT LOCATIONS AND DIMENSIONS OF EXIT PORCHES, RAMPS, DOWNSPOUTS, GRAVEL AREAS ADJACENT TO BUILDING WALLS, UTILITY ENTRANCE LOCATIONS AND BOLLARDS IN BUILDING SIDEWALKS.
3. ACCESSIBLE SIGNS WITH A "VAN" MARKING SHALL HAVE ADDITIONAL SIGN MOUNTED ABOVE THE SYMBOL OF ACCESSIBILITY SIGN DENOTING VAN ACCESSIBILITY.
4. REFER TO DETAIL SHEET C8.0 & C8.1 FOR DETAILS OF ON-SITE SIGNAGE, STRIPING, AND PAVEMENT MARKING. REFER TO SITE PLAN FOR ADDITIONAL DIMENSIONAL INFORMATION.
5. ALL WORK AND MATERIALS SHALL COMPLY WITH ALL CITY, COUNTY AND STATE REGULATIONS AND CODES AND O.S.H.A. STANDARDS.
6. ALL ISLANDS WITH CURB & GUTTER SHALL BE LANDSCAPED. THOSE ISLANDS ARE TO HAVE CURB & GUTTER AS SHOWN ON THE CONSTRUCTION DRAWINGS.
7. EXISTING INFORMATION SHOWN FROM AN ALTA/ACSM LAND TITLE SURVEY PROVIDED BY CHANDLER LAND SURVEYING, INC., 83 ADAMS POINT DRIVE, GARNER, NC 27529, PHONE: 919-291-9163 AND DATED NOVEMBER 21, 2017 AND TAKEN FROM TOWN OF KNIGHTDALE APPROVED CONSTRUCTION PLAN FOR PARKSTONE AT KNIGHTDALE (KHA #017254001) DATED NOVEMBER 15, 2016, FROM TOWN OF KNIGHTDALE APPROVED CONSTRUCTION PLANS FOR PARKSTONE VILLAGE (KHA #017254009) DATED NOVEMBER 8, 2019 AND PROVIDED BY KIMLEY-HORN AND ASSOCIATES, 421 FAYETTEVILLE STREET, SUITE 600, RALEIGH, NC 27601, PHONE: 919-667-2000, AND FROM A SANITARY SEWER ELEVATION SURVEY PROVIDED BY RWK, PA, 101 W. MAIN ST SUITE 202M GARNER, NC 27529, PHONE: 919-779-4854 AND DATED NOVEMBER 10, 2021.
8. THE CONTRACTOR SHALL EMPLOY ALL NECESSARY BARRICADES, SIGNS, FENCES, FLASHING LIGHTS, TRAFFIC MEN, ETC. FOR MAINTENANCE AND PROTECTION OF TRAFFIC AS REQUIRED BY THE NORTH CAROLINA DEPT. OF TRANSPORTATION (NCDOT) AND CITY OF RALEIGH PUBLIC WORKS DEPARTMENT.
9. THE CONTRACTOR SHALL PROTECT ALL MONUMENTS, IRON PINS, AND PROPERTY CORNERS DURING CONSTRUCTION.
10. THE CONTRACTOR SHALL REPLACE EXISTING CONCRETE CURBS, SIDEWALK, PAVING, AND GUTTER AS NECESSARY.
11. APPROVAL OF THIS PLAN IS NOT AN AUTHORIZATION TO GRADE ADJACENT PROPERTIES. WHEN FIELD CONDITIONS WARRANT OFF-SITE GRADING, PERMISSION MUST BE OBTAINED FROM THE AFFECTED PROPERTY OWNERS.
12. CONTRACTOR AGREES TO REPAIR ANY DAMAGE TO THE PUBLIC RIGHT-OF-WAY IN ACCORDANCE WITH THE STANDARDS OF THE NCDOT AND CITY OF RALEIGH.
13. COORDINATE ALL CURB AND STREET GRADES IN INTERSECTIONS WITH INSPECTOR PRIOR TO CONSTRUCTION.
14. THE CONTRACTOR SHALL IMMEDIATELY REPORT TO THE OWNER ANY DISCREPANCIES FOUND BETWEEN THE ACTUAL FIELD CONDITIONS AND THE CONSTRUCTION DOCUMENTS AND SHALL WAIT FOR INSTRUCTION PRIOR TO PROCEEDING.
15. ALL SITE DIMENSIONS ARE REFERENCED TO THE FACE OF CURB OR EDGE OF PAVEMENT UNLESS OTHERWISE NOTED. ALL BUILDING DIMENSIONS ARE REFERENCED TO THE OUTSIDE FACE OF THE STRUCTURE.
16. THE CONTRACTOR SHALL CONSTRUCT ACCESSIBLE RAMPS AT ALL INTERSECTIONS IN ACCORDANCE WITH THE CITY OF RALEIGH STANDARD DETAIL AND NORTH CAROLINA DEPARTMENT OF TRANSPORTATION STANDARDS MANUAL (LATEST REVISIONS FOR ACCESSIBLE RAMP DETAILS).
17. SIGHT TRIANGLES SHOWN ARE THE MINIMUM REQUIRED. WITHIN THE AREA OF A DEFINED SIGHT TRIANGLE, THERE SHALL BE NO SIGHT OBSTRUCTING OR PARTLY OBSTRUCTING WALL, FENCE, SIGN, FOLIAGE, BERMING, OR PARKED VEHICLES BETWEEN THE HEIGHTS OF TWENTY-FOUR (24) INCHES AND EIGHT (8) FEET ABOVE THE CURB LINE ELEVATION OR THE NEAREST TRAVEL WAY IF NO CURBING EXISTS.
18. NO TREE SHALL BE LOCATED WITHIN 15' OF A LIGHTING LOCATION.
19. ALL CONSTRUCTION MUST BE PERFORMED IN ACCORDANCE WITH CURRENT NCDOT AND TOWN OF KNIGHTDALE STANDARD SPECIFICATIONS AND DETAILS.
20. ALL WORK MUST COMPLY WITH NORTH CAROLINA STATE BUILDING AND HANDICAPPED ACCESSIBILITY CODE VOL. 1C.
21. VERTICAL DATUM FOR SURVEY IS NAVD 88.

TREE PROTECTION NOTES

1. THE CONTRACTOR SHALL PROTECT ALL TREES AND SHRUBS OUTSIDE OF CUT/FILL LINES, IN ADDITION TO THOSE THAT RECEIVE TREE/SHRUB PROTECTION BARRIERS. THE CONTRACTOR IS ALSO REQUESTED TO SAVE ALL OTHER EXISTING TREES AND SHRUBS WHERE POSSIBLE.
2. WHEN ROOT PRUNING IS NECESSARY, CUT ROOTS CLEANLY USING A DISC TRENCHER AND IMMEDIATELY COVER ALL ROOT CUT SURFACES LARGER THAN TWO INCHES IN DIAMETER WITH TREE WOUND DRESSING. USE PLYWOOD FORMS WHEN TREE ROOTS ARE ADJACENT TO PROPOSED CURB & GUTTER OR SIDEWALK.
3. NO SOIL DISTURBANCE OR COMPACTION, CONSTRUCTION MATERIALS, TRAFFIC, BURIAL PITS, TRENCHING OR OTHER LAND DISTURBING ACTIVITY ALLOWED IN THE TREE PROTECTION ZONE. TREE BARRICADES MUST BE INSTALLED BEFORE ANY DEMOLITION, GRADING OR CONSTRUCTION BEGINS, AND NOT REMOVED UNTIL FINAL INSPECTION.
4. NO GRUBBING WITHIN TREE PROTECTION ZONE. LEAVE SOIL AND LEAF LITTER UNDISTURBED. SUPPLEMENT WITH 1-2 INCHES OF MULCH. RE-SEED WITH GRASS ONLY IN DISTURBED/GRADED AREAS.
5. TREE BARRICADES MUST BE INSTALLED BEFORE ANY DEMOLITION, CLEARING, GRADING OR CONSTRUCTION BEGINS AND IS NOT TO BE REMOVED UNTIL AFTER CONSTRUCTION.

TRAFFIC CONTROL

1. REFER TO MANUAL ON UNIFORM TRAFFIC CONTROL DEVICES (LATEST EDITION) FOR DETAILS OF STANDARD TRAFFIC CONTROL SIGNS AND STANDARDS.

DEMOLITION NOTES

A. CONTRACTOR SHALL COORDINATE WITH THE TOWN OF KNIGHTDALE TO OBTAIN ALL NECESSARY DEMOLITION PERMITS PRIOR TO THE START OF ANY DEMOLITION WORK.

B. REMOVE ENTIRE CONCRETE CURB TO LIMITS REQUIRED FOR NEW WORK, SAW CUTTING AND REMOVING NO LONGER ALLOWED.

C. REMOVE VEGETATION AND GRASS IN AREAS TO RECEIVE NEW ASPHALT AND CONCRETE PAVEMENTS.

D. SAW CUT AND REMOVE ASPHALT PAVEMENT TO LIMITS INDICATED ON PLAN.

E. THE CONTRACTOR SHALL DEMOLISH AND REMOVE OFF-SITE FACILITIES WITHIN THE PROJECT SITE TO INCLUDE BUILDINGS, CONCRETE STRUCTURES (ABOVE GROUND AND FOUNDATION), SITE LIGHTING STRUCTURES, PAVEMENTS AND SECONDARY UTILITIES. ALL MATERIALS SHALL BE PROPERLY DISPOSED OF PER STATE REGULATIONS.

F. ALL PRIMARY UTILITIES DISCOVERED DURING DEMOLITION OPERATIONS THAT SERVE ACTIVITIES OTHER THAN THE CANCER CENTER SITE SHALL BE PROPERLY PRESERVED AND PROTECTED.

G. THE CONTRACTOR SHALL IMMEDIATELY REPORT TO THE OWNER AND ENGINEER ANY UNFORESEEN OR ADVERSE CONDITIONS, INCLUDING UNCHARTED UTILITIES, DISCOVERED DURING DEMOLITION OPERATIONS.

GENERAL EROSION AND SEDIMENT CONTROL NOTES

1. REFER TO EXISTING CONDITIONS PLAN.
2. EXCAVATION AND EARTH MOVING OPERATIONS SHALL BE CONDUCTED UNDER THE SUPERVISION OF THE OWNER'S GEOTECHNICAL ENGINEER.
3. ALL CONSTRUCTION SHALL COMPLY WITH NCDENR AND WAKE COUNTY STANDARDS AND SPECIFICATIONS.
4. ENSURE THAT THE BUILDING PAD IS CONSTRUCTED WITH SUITABLE MATERIAL AS PER THE GEOTECHNICAL ENGINEERS DIRECTION.
5. VERIFY THE LOCATION OF ALL EXISTING UTILITIES PRIOR TO CONSTRUCTION. EXISTING UTILITIES SHOWN ARE FROM THE BEST AVAILABLE RECORDS AND FROM A SURVEY OF ABOVE GROUND FEATURES. NO WARRANTY IS GIVEN OR IMPLIED AS TO THE ACCURACY OF THE INFORMATION. ALL EXISTING UTILITIES SHOULD BE CONSIDERED APPROXIMATE IN LOCATION AND VERIFIED PRIOR TO COMMENCING ACTIVITY ON SITE.
6. STABILIZE DISTURBED AREAS WITH TEMPORARY VEGETATION. DENUDED AREAS MUST BE SEEDED WITHIN FOURTEEN (14) DAYS OF COMPLETION OF ANY PHASE OF CONSTRUCTION. (REFER TO NPDES SEEDING SCHEDULE FOR SEEDING IN CRITICAL AREAS).
7. ENSURE THAT ALL TEMPORARY DIVERSIONS ARE INSTALLED WITH POSITIVE DRAINAGE AND SHALL OPPOSE EXISTING GRADE WHEN NECESSARY TO PROVIDE A MINIMUM OF 0.5% LONGITUDINAL SLOPE.
8. ALL ADJACENT ROADS TO THE SITE ARE TO BE SWEPT AND WASHED AT THE END OF EACH WORK DAY TO ENSURE NO SEDIMENT COLLECTS ON THE ROADWAYS.
9. INSPECT AND PROPERLY MAINTAIN ALL EROSION AND SEDIMENT CONTROL MEASURES WEEKLY AND AFTER EVERY RAINFALL EVENT.
10. INSTALL ANY ADDITIONAL EROSION CONTROL MEASURES AS NECESSARY TO PREVENT SEDIMENT RUNOFF.

STORM DRAIN INSTALLATION SEQUENCE

1. STORM SEWER TO BE INSTALLED UPSTREAM FOR EACH RUN TO AVOID CONSTRUCTION IN THE BASINS. CONTRACTOR TO CONFIRM DOWNSTREAM STORM CONNECTION INVERT PRIOR TO INSTALLATION OF UPSTREAM STORM PIPES TO CONFIRM REQUIRED FALL IS ACHIEVABLE
2. BEGIN INSTALLATION OF STORM PIPES FROM INLET DI-18 TO INLET DI-1.
3. BEGIN INSTALLATION OF STORM PIPES FROM INLET CB-6 TO INLET CB-5.
4. BEGIN INSTALLATION OF STORM PIPES FROM INLET CB-3 TO INLET CB-2.
5. BEGIN INSTALLATION OF STORM PIPES FROM INLET DI-13 TO INLET DI-10.
6. BEGIN INSTALLATION OF STORM PIPES FROM INLET DI-20 TO INLET DI-12.
7. BEGIN INSTALLATION OF STORM PIPES FROM INLET DI-21 TO INLET DI-10.
8. BEGIN INSTALLATION OF STORM PIPES FROM INLET CB-13 TO INLET DI-14.
9. BEGIN INSTALLATION OF STORM PIPES FROM INLET CB-12 TO INLET DI-17.
10. BEGIN INSTALLATION OF STORM PIPES FROM INLET CB-11 TO INLET DI-14.
11. STORM DRAINS DISCHARGING INTO SEDIMENT BASINS SHALL DISCHARGE BEHIND THE BAFFELS AND MAY REQUIRE TEMPORARY PIPES TO ACHIEVE THIS.
12. STABILIZE SITE AS AREAS ARE BROUGHT UP TO FINISH GRADE WITH VEGETATION, PAVING, DITCH LININGS, ETC. SEED AND MULCH DENUDED AREAS PER GROUND STABILIZATION TIME FRAMES.SEDIMENT BASINS TO REMAIN IN PLACE WHILE HARDSCAPE IS BEING INSTALLED OVER INSTALLED STORM PIPES.
13. ONCE ALL UPSTREAM HARDSCAPE HAS BEEN INSTALLED CONTACT DOMINGO ORPILLA AT 919-217-2254 FOR INSPECTION.
14. UPON APPROVAL, BEGIN REMOVAL OF SEDIMENT BASINS.
15. INSTALL REMAINING STORM PIPE SECTIONS CONNECTING TO EXISTING TIE-IN POINTS.

GRADING:

1. ALL WORK AND MATERIALS SHALL COMPLY WITH ALL TOWN OF KNIGHTDALE AND NORTH CAROLINA DEPARTMENT OF TRANSPORTATION (NCDOT) REGULATIONS AND CODES AND O.S.H.A. STANDARDS.
2. ALL CONTOURS AND SPOT ELEVATIONS REFLECT FINISHED GRADES.
3. ALL ELEVATIONS ARE IN REFERENCE TO THE BENCHMARK, AND THIS MUST BE VERIFIED BY THE GENERAL CONTRACTOR PRIOR TO GROUND BREAKING.
4. THE CONTRACTOR SHALL IMMEDIATELY REPORT TO OWNER ANY DISCREPANCIES FOUND BETWEEN ACTUAL FIELD CONDITIONS AND CONSTRUCTION DOCUMENTS AND SHALL WAIT FOR INSTRUCTION PRIOR TO PROCEEDING.
5. THE CONTRACTOR SHALL BE RESPONSIBLE FOR LOCATING AND PROTECTING EXISTING UTILITIES, AND SHALL REPAIR ALL DAMAGE TO EXISTING UTILITIES THAT OCCUR DURING CONSTRUCTION.
6. CONTRACTOR SHALL BLEND NEW EARTHWORK SMOOTHLY TO TRANSITION BACK TO EXISTING GRADE.
7. ALL FILL TO BE COMPACTED PER THE RECOMMENDATIONS OF A GEOTECHNICAL ENGINEER.
8. LIMITS OF CLEARING SHOWN ON GRADING PLAN ARE BASED UPON THE APPROXIMATE CUT AND FILL SLOPE LIMITS, OR OTHER GRADING REQUIREMENTS.
9. THE PROPOSED CONTOURS SHOWN IN DRIVES AND PARKING LOTS AND SIDEWALKS ARE FINISHED ELEVATIONS INCLUDING ASPHALT. REFER TO PAVEMENT CROSS SECTION DATA TO ESTABLISH CORRECT SUBBASE OR AGGREGATE BASE COURSE ELEVATIONS TO BE COMPLETED UNDER THIS CONTRACT.
10. CONTRACTOR SHALL INSURE POSITIVE DRAINAGE SO THAT RUNOFF WILL DRAIN BY GRAVITY FLOW ACROSS NEW PAVEMENT AREAS TO NEW OR EXISTING DRAINAGE INLETS OR SHEET OVERLAND.
11. ANY GRADING, BEYOND THE LIMITS OF CONSTRUCTION AS SHOWN ON THE GRADING PLAN IS SUBJECT TO A FINE.
12. THE CONTRACTOR SHALL ADHERE TO ALL TERMS & CONDITIONS AS OUTLINED IN THE GENERAL N.P.D.E.S. PERMIT FOR STORMWATER DISCHARGE ASSOCIATED WITH CONSTRUCTION ACTIVITIES.
13. ALL UNSURFACED AREAS DISTURBED BY GRADING OPERATION SHALL RECEIVE 4 INCHES OF TOPSOIL.
14. CONTRACTOR SHALL GRASS DISTURBED AREAS UNTIL A HEALTHY STAND OF GRASS IS OBTAINED.
15. CONSTRUCTION SHALL COMPLY WITH ALL APPLICABLE GOVERNING CODES AND BE CONSTRUCTED TO SAME.
16. THE CONTRACTOR IS RESPONSIBLE FOR THE DESIGN AND IMPLEMENTATION OF ALL SHEETING, SHORING, BRACING AND SPECIAL EXCAVATION MEASURES REQUIRED TO MEET OSHA, FEDERAL, STATE AND LOCAL REGULATIONS PURSUANT TO THE INSTALLATION OF THE WORK INDICATED ON THESE DRAWINGS. THE DESIGN ENGINEER ACCEPTS NO RESPONSIBILITY FOR THE DESIGN(S) TO INSTALL SAID ITEMS.
17. THE CONTRACTOR SHALL INCLUDE IN THE CONTRACT PRICE ANY DEWATERING NECESSARY TO CONSTRUCT THE PROJECT AS SHOWN ON THE PLANS AS AN ALTERNATE ALLOWANCE.
18. THE CONTRACTOR SHALL REFER TO THE ARCHITECTURAL PLANS FOR EXACT BUILDING DIMENSIONS AND EXACT UTILITY ENTRANCE LOCATIONS AND ELEVATIONS.
19. ALL FILL MATERIALS, EXISTING BUILDING FOUNDATIONS, PAVEMENT AND UTILITY STRUCTURES, TOPSOIL AND ANY OTHER DELETERIOUS MATERIALS SHALL BE COMPLETELY REMOVED FROM WITHIN THE BEARING ZONE BELOW THE STRUCTURE.
20. ALL FOUNDATION AND UTILITY EXCAVATION SHALL BE INSPECTED BY A QUALIFIED GEOTECHNIAL REPRESENTATIVE TO DETERMINE WHETHER UNSUITABLE MATERIAL MUST BE REMOVED. ALL UNDESIRABLE MATTER SHALL BE REMOVED, BACKFILLED AND COMPACTED WITH SUITABLE MATERIAL AS REQUIRED BY THE GEOTECHNICAL REPRESENTATIVE AT CONTRACTOR'S EXPENSE.
21. GRADES, ELEVATIONS AND LOCATIONS SHOWN ARE APPROXIMATE. AS DIRECTED BY THE ENGINEER, THEY MAY BE ADJUSTED TO ACCOMMODATE UNFORESEEN CONDITIONS. STATIONS, OFFSETS AND ELEVATIONS REFER TO THE CENTER OF DROP INLETS, MANHOLES AND JUNCTION BOXES, AND THE MIDPOINT OF THE LIP FOR CATCH BASINS.
22. CONTRACTOR SHALL ADJUST AND/OR CUT EXISTING PAVEMENT AS NECESSARY TO ASSURE A SMOOTH FIT AND CONTINUOUS GRADE.
23. EXISTING AND PROPOSED GRADE CONTOUR INTERVALS SHOWN AT 1 FOOT.
24. CONTRACTOR IS RESPONSIBLE FOR DEMOLITION OF EXISTING STRUCTURES INCLUDING REMOVAL OF ANY EXISTING UTILITIES SERVING THE STRUCTURE. UTILITIES ARE TO BE REMOVED TO THE RIGHT-OF-WAY.

DRAINAGE:

1. STORM PIPE SHALL BE AS FOLLOWS UNLESS OTHERWISE NOTED:
   15" DIAMETER AND LARGER: RCP, CLASS III PER ASTM C-76,WITH FLEXIBLE PLASTIC BITUMEN GASKETS AT JOINTS.
   LESS THAN 15" DIAMETER: PVC
2. ALL STORM DRAINAGE WITHIN THE PUBLIC RIGHT-OF-WAY SHALL BE CLASS III REINFORCED CONCRETE PIPE.
3. ALL PIPE LENGTHS AND SLOPES ARE APPROXIMATE.
4. ALL PIPES SHALL BE LAID ON STRAIGHT ALIGNMENTS AND EVEN GRADES USING A PIPE LASER OR OTHER ACCURATE METHOD.
5. SUBSURFACE DRAINAGE FACILITIES MAY RE REQUIRED IN THE STREET RIGHT-OF-WAY IF DEEMED NECESSARY BY THE INSPECTOR.
6. UNDERGROUND UTILITY LINES SHALL BE INSTALLED IN ACCORDANCE WITH THE FOLLOWING STANDARDS IN ADDITION TO OTHER APPLICABLE CRITERIA:
   A. NO MORE THAN 500 LF OF TRENCH MAY BE OPENED AT ONE TIME.
   B. EXCAVATED MATERIAL SHALL BE PLACED ON THE UPHILL SIDE OF TRENCHES.
   C. EFFLUENT FROM DEWATERING OPERATIONS SHALL BE FILTERED OR PASSED THROUGH AN APPROVED SEDIMENT TRAPPING DEVICE, OR BOTH, AND DISCHARGED IN A MANNER THAT DOES NOT ADVERSELY AFFECT FLOWING STREAMS OR OFF-SITE PROPERTY.
   D. MATERIAL USED FOR BACK-FILLING TRENCHES SHALL BE PROPERLY COMPACTED IN ORDER TO MINIMIZE EROSION AND PROMOTE STABILIZATION.
   E. DESTABILIZATION SHALL BE ACCOMPLISHED IN ACCORDANCE WITH THE EROSION AND SEDIMENT CONTROL REGULATIONS.
   F. APPLICABLE SAFETY REGULATIONS SHALL BE COMPLIED WITH.
7. IF ANY EXISTING STRUCTURES TO REMAIN ARE DAMAGED DURING CONSTRUCTION IT SHALL BE THE CONTRACTORS RESPONSIBILITY TO REPAIR AND/OR REPLACE THE EXISTING STRUCTURE AS NECESSARY TO RETURN IT TO EXISTING CONDITIONS OR BETTER.
8. ALL STORM PIPE ENTERING STRUCTURES SHALL BE GROUTED TO ASSURE CONNECTION AT STRUCTURE IS WATERTIGHT.
9. ALL STORM STRUCTURES SHALL HAVE A SMOOTH UNIFORM POURED MORTAR INVERT FROM INVERT IN TO INVERT OUT.
10. PRECAST STRUCTURES MAY BE USED AT CONTRACTORS OPTION. CATCH BASINS, MANHOLES, FRAMES, GRATES, ETC. SHALL MEET THE REQUIREMENTS OF THE LATEST EDITION OF THE NORTH CAROLINA DEPARTMENT OF TRANSPORTATION STANDARD DETAILS AND SPECIFICATIONS.
11. ALL STORM SEWER MANHOLES IN PAVED AREAS SHALL BE FLUSH WITH PAVEMENT, AND SHALL HAVE TRAFFIC BEARING RING & COVERS. LIDS SHALL BE LABELED "STORM SEWER".
12. STRUCTURE TOP ELEVATIONS SHOWN HERE ARE APPROXIMATE. CONTRACTOR SHALL ADJUST AS NECESSARY.

STANDARD UTILITY NOTES:

1. ALL MATERIALS & CONSTRUCTION METHODS SHALL BE IN ACCORDANCE WITH CITY OF RALEIGH DESIGN STANDARDS, DETAILS & SPECIFICATIONS (REFERENCE: CORPUD HANDBOOK, CURRENT EDITION)
2. UTILITY SEPARATION REQUIREMENTS:
   a) A DISTANCE OF 100' SHALL BE MAINTAINED BETWEEN SANITARY SEWER & ANY PRIVATE OR PUBLIC WATER SUPPLY SOURCE SUCH AS AN IMPOUNDED RESERVOIR USED AS A SOURCE OF DRINKING WATER. IF ADEQUATE LATERAL SEPARATION CANNOT BE ACHIEVED, FERROUS SANITARY SEWER PIPE SHALL BE SPECIFIED & INSTALLED TO WATERLINE SPECIFICATIONS. HOWEVER, THE MINIMUM SEPARATION SHALL NOT BE LESS THAN 25' FROM A PRIVATE WELL OR 50' FROM A PUBLIC WELL
   b) WHEN INSTALLING WATER &/OR SEWER MAINS, THE HORIZONTAL SEPARATION BETWEEN UTILITIES SHALL BE 10'. IF THIS SEPARATION CANNOT BE MAINTAINED DUE TO EXISTING CONDITIONS, THE VARIATION ALLOWED IS THE WATER MAIN IN A SEPARATE TRENCH WITH THE ELEVATION OF THE WATER MAIN AT LEAST 18" ABOVE THE TOP OF THE SEWER & MUST BE APPROVED BY THE PUBLIC UTILITIES DIRECTOR. ALL DISTANCES ARE MEASURED FROM OUTSIDE DIAMETER TO OUTSIDE DIAMETER
   c) WHERE IT IS IMPOSSIBLE TO OBTAIN PROPER SEPARATION, OR ANYTIME A SANITARY SEWER PASSES OVER A WATERMAIN, DIP MATERIALS OR STEEL ENCASEMENT EXTENDED 10' ON EACH SIDE OF CROSSING MUST BE SPECIFIED & INSTALLED TO WATERLINE SPECIFICATIONS
   d) 5.0' MINIMUM HORIZONTAL SEPARATION IS REQUIRED BETWEEN ALL SANITARY SEWER & STORM SEWER FACILITIES, UNLESS DIP MATERIAL IS SPECIFIED FOR SANITARY SEWER
   e) MAINTAIN 18" MIN. VERTICAL SEPARATION AT ALL WATERMAIN & RCP STORM DRAIN CROSSINGS; MAINTAIN 18" MIN. VERTICAL SEPARATION AT ALL SANITARY SEWER & RCP STORM DRAIN CROSSINGS. WHERE ADEQUATE SEPARATIONS CANNOT BE ACHIEVED, SPECIFY DIP MATERIALS & A CONCRETE CRADLE HAVING 6" MIN. CLEARANCE (PER CORPUD DETAILS W-41 & S-49)
   f) ALL OTHER UNDERGROUND UTILITIES SHALL CROSS WATER & SEWER FACILITIES WITH 18" MIN. VERTICAL SEPARATION REQUIRED
3. ANY NECESSARY FIELD REVISIONS ARE SUBJECT TO REVIEW & APPROVAL OF AN AMENDED PLAN &/OR PROFILE BY THE CITY OF RALEIGH PUBLIC UTILITIES DEPARTMENT PRIOR TO CONSTRUCTION
4. DEVELOPER SHALL PROVIDE 30 DAYS ADVANCE WRITTEN NOTICE TO OWNER FOR ANY WORK REQUIRED WITHIN AN EXISTING CITY OF RALEIGH UTILITY EASEMENT TRAVERSING PRIVATE PROPERTY
5. CONTRACTOR SHALL MAINTAIN CONTINUOUS WATER & SEWER SERVICE TO EXISTING RESIDENCES & BUSINESSES THROUGHOUT CONSTRUCTION OF PROJECT. ANY NECESSARY SERVICE INTERRUPTIONS SHALL BE PRECEDED BY A 24 HOUR ADVANCE NOTICE TO THE CITY OF RALEIGH PUBLIC UTILITIES DEPARTMENT
6. 3.0' MINIMUM COVER IS REQUIRED ON ALL WATER MAINS & SEWER FORCEMAINS. 4.0' MINIMUM COVER IS REQUIRED ON ALL REUSE MAINS
7. IT IS THE DEVELOPER'S RESPONSIBILITY TO ABANDON OR REMOVE EXISTING WATER & SEWER SERVICES NOT BEING USED IN REDEVELOPMENT OF A SITE UNLESS OTHERWISE DIRECTED BY THE CITY OF RALEIGH PUBLIC UTILITIES DEPARTMENT. THIS INCLUDES ABANDONING TAP AT MAIN & REMOVAL OF SERVICE FROM ROW OR EASEMENT PER CORPUD HANDBOOK PROCEDURE
8. INSTALL 2" PE WATER SERVICES WITH METERS LOCATED AT ROW OR WITHIN A 2'X2' WATERLINE EASEMENT IMMEDIATELY ADJACENT. NOTE: IT IS THE APPLICANT'S RESPONSIBILITY TO PROPERLY SIZE THE WATER SERVICE FOR EACH CONNECTION TO PROVIDE ADEQUATE FLOW & PRESSURE
9. INSTALL 4" PVC SEWER SERVICES @ 1.0% MINIMUM GRADE WITH CLEANOUTS LOCATED AT ROW OR EASEMENT LINE & SPACED EVERY 75 LINEAR FEET MAXIMUM
10. PRESSURE REDUCING VALVES ARE REQUIRED ON ALL WATER SERVICES EXCEEDING 80 PSI; BACKWATER VALVES ARE REQUIRED ON ALL SANITARY SEWER SERVICES HAVING BUILDING DRAINS LOWER THAN 1.0' ABOVE THE NEXT UPSTREAM MANHOLE
11. ALL ENVIRONMENTAL PERMITS APPLICABLE TO THE PROJECT MUST BE OBTAINED FROM NCDWQ, USACE &/OR FEMA FOR ANY RIPARIAN BUFFER, WETLAND &/OR FLOODPLAIN IMPACTS (RESPECTIVELY) PRIOR TO CONSTRUCTION
12. NCDOT / RAILROAD ENCROACHMENT AGREEMENTS ARE REQUIRED FOR ANY UTILITY WORK (INCLUDING MAIN EXTENSIONS & SERVICE TAPS) WITHIN STATE OR RAILROAD ROW PRIOR TO CONSTRUCTION
13. GREASE INTERCEPTOR / OIL WATER SEPARATOR SIZING CALCULATIONS & INSTALLATION SPECIFICATIONS SHALL BE APPROVED BY THE RW FOG PROGRAM COORDINATOR PRIOR TO ISSUANCE OF A UC / BLDG PERMIT. CONTACT (919) 996-4516 OR FOG@RALEIGHNC.GOV FOR MORE INFORMATION
14. CROSS-CONNECTION

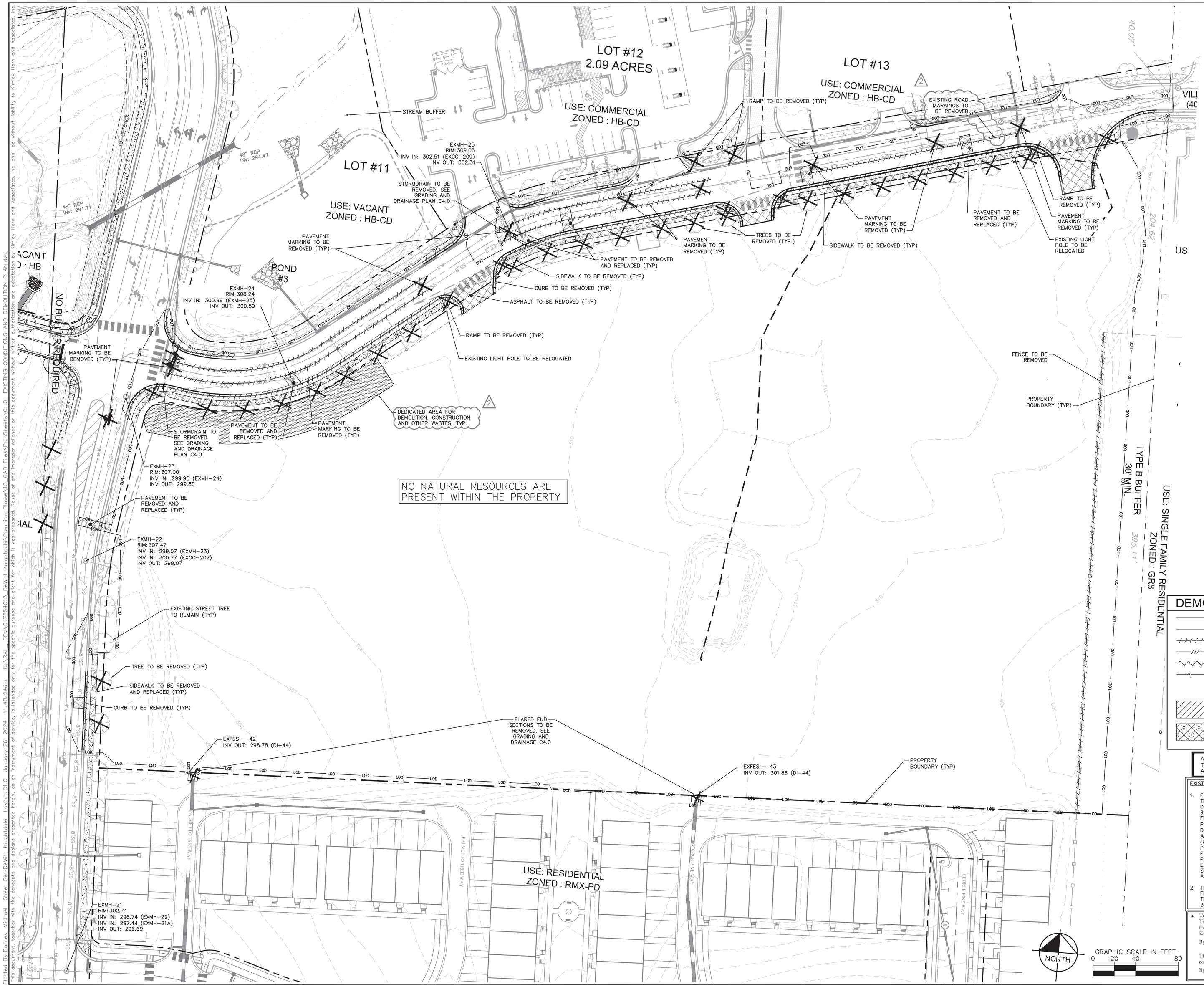

DEMOLITION NOTES

1. CONTRACTOR SHALL COORDINATE WITH THE TOWN OF KNIGHTDALE TO OBTAIN ALL NECESSARY DEMOLITION PERMITS PRIOR TO THE START OF ANY DEMOLITION WORK.
2. SAW CUT AND REMOVE CONCRETE CURB TO LIMITS REQUIRED FOR NEW WORK.
3. REMOVE VEGETATION AND GRASS IN AREAS TO RECEIVE NEW ASPHALT AND CONCRETE PAVEMENTS.
4. SAW CUT AND REMOVE ASPHALT PAVEMENT TO LIMITS INDICATED ON PLAN.
5. DEMOLITION MATERIALS SHALL BE PROPERLY DISPOSED OF OFF SITE PER STATE REGULATIONS.
6. ALL PRIMARY UTILITIES DISCOVERED DURING DEMOLITION OPERATIONS THAT SERVE ACTIVITIES OTHER THAN THE PROJECT SITE SHALL BE PROPERLY PRESERVED AND PROTECTED.
7. THE CONTRACTOR SHALL IMMEDIATELY REPORT TO THE OWNER AND ENGINEER ANY UNFORESEEN OR ADVERSE CONDITIONS, INCLUDING UNCHARTED UTILITIES, DISCOVERED DURING DEMOLITION OPERATIONS.
8. SUBSURFACE FEATURES ARE SHOWN IN APPROXIMATE LOCATION. CONTRACTOR IS RESPONSIBLE FOR SUBSURFACE UTILITY EXPLORATION TO DETERMINE UTILITY LOCATIONS AND DEPTHS.

LIMITS OF DISTURBANCE:
522,720 SF (12.00 AC)

DEMOLITION LEGEND

- PROPERTY LINE
- CLEARING LIMITS
- DEMOLISH SITE ITEM
- DEMOLISH UNDERGROUND UTILITY
- ABANDON UTILITY IN PLACE
- SAWCUT
- DEMOLISH SITE ITEM/ TREE TO BE REMOVED
- BUILDINGS TO BE REMOVED
- SIDEWALK/PAVEMENT TO BE REMOVED

ALL CONSTRUCTION TO BE IN ACCORDANCE WITH ALL TOWN OF KNIGHTDALE AND/OR NCDOT STANDARDS AND SPECIFICATIONS.

EXISTING CONDITION NOTES:

1. EXISTING INFORMATION SHOWN FROM AN ALTA/ACSM LAND TITLE SURVEY PROVIDED BY CHANDLER LAND SURVEYING, INC., 83 ADAMS POINT DRIVE, GARNER, NC 27529, PHONE: 919-291-9163 AND DATED NOVEMBER 21, 2017 AND TAKEN FROM TOWN OF KNIGHTDALE APPROVED CONSTRUCTION PLANS FOR PARKSTONE AT KNIGHTDALE (KHA #017254001) DATED NOVEMBER 15, 2016, FROM TOWN OF KNIGHDALE APPROVED CONSTRUCTION PLANS FOR PARKSTONE VILLAGE (KHA #017254009) DATED NOVEMBER 8, 2019 AND PROVIDED BY KIMLEY-HORN AND ASSOCIATES, 421 FAYETTEVILLE STREET, SUITE 600, RALEIGH, NC 27601, PHONE: 919-677-2000, AND FROM A SANITARY SEWER ELEVATION SURVEY PROVIDED BY RWK, PA, 101 W. MAIN ST SUITE 202M GARNER, NC 27529, PHONE: 919-779-4854 AND DATED NOVEMBER 10, 2021.
2. THE SUBJECT PROPERTY IS NOT LOCATED WITHIN A SPECIAL FLOOD HAZARD AREA. IT IS LOCATED IN ZONE X BASED ON THE FLOOD INSURANCE RATE MAP COMMUNITY MAP NUMBER 3720174400K DATED JULY 19, 2022.

a. Town Certification. This design has been reviewed by the Engineer for the Town of Knightdale, and to the best of my knowledge and belief, it conforms to the requirements established in the Standard Specifications of the Town of Knightdale.

By: Samuel A. MacDonald Date: _____
Town Engineer

These plans are approved by the Town of Knightdale and serve as construction plans for this project.

By: Kevin Lewis Date: _____
Administrator

No.	REVISIONS	DATE	BY
1	REVISED PER TOK COMMENTS	9/12/23	ASA
2	REVISED PER TOK COMMENTS	01/12/24	DPM

Kimley»Horn
421 FAYETTEVILLE STREET, SUITE 600, RALEIGH, NC 27601
PHONE: 919-677-2000 FAX: 919-677-2050
WWW.KIMLEY-HORN.COM
#F-0102

NORTH CAROLINA PROFESSIONAL ENGINEER SEAL 052434 TIMOTHY R. CARTER
4/25/2024

KHA PROJECT	017254013
DATE	06/26/2023
SCALE	AS SHOWN
DESIGNED BY	KEJ
DRAWN BY	KEJ
CHECKED BY	COB

EXISTING CONDITIONS AND DEMOLITION PLAN

DEWITT KNIGHTDALE
PREPARED FOR
WIDEWATERS
TOWN OF KNIGHTDALE NORTH CAROLINA

SHEET NUMBER
C1.0

Plotted By: Barnes, Michael Street Set: DeWitt Knightdale Layout: C1.0 January 26, 2024 11:48:24am K:\RAL_LDEV\017254013_DeWitt Knightdale\Planning Phase\15-CAD Files\PlanSheets\C1.0 - EXISTING CONDITIONS AND DEMOLITION PLAN.dwg
This document, together with the concepts and designs presented herein, as an instrument of service, is intended only for the specific purpose and client for which it was prepared. Reuse of and improper reliance on this document without written authorization and adaptation by Kimley-Horn and Associates, Inc. shall be without liability to Kimley-Horn and Associates, Inc.

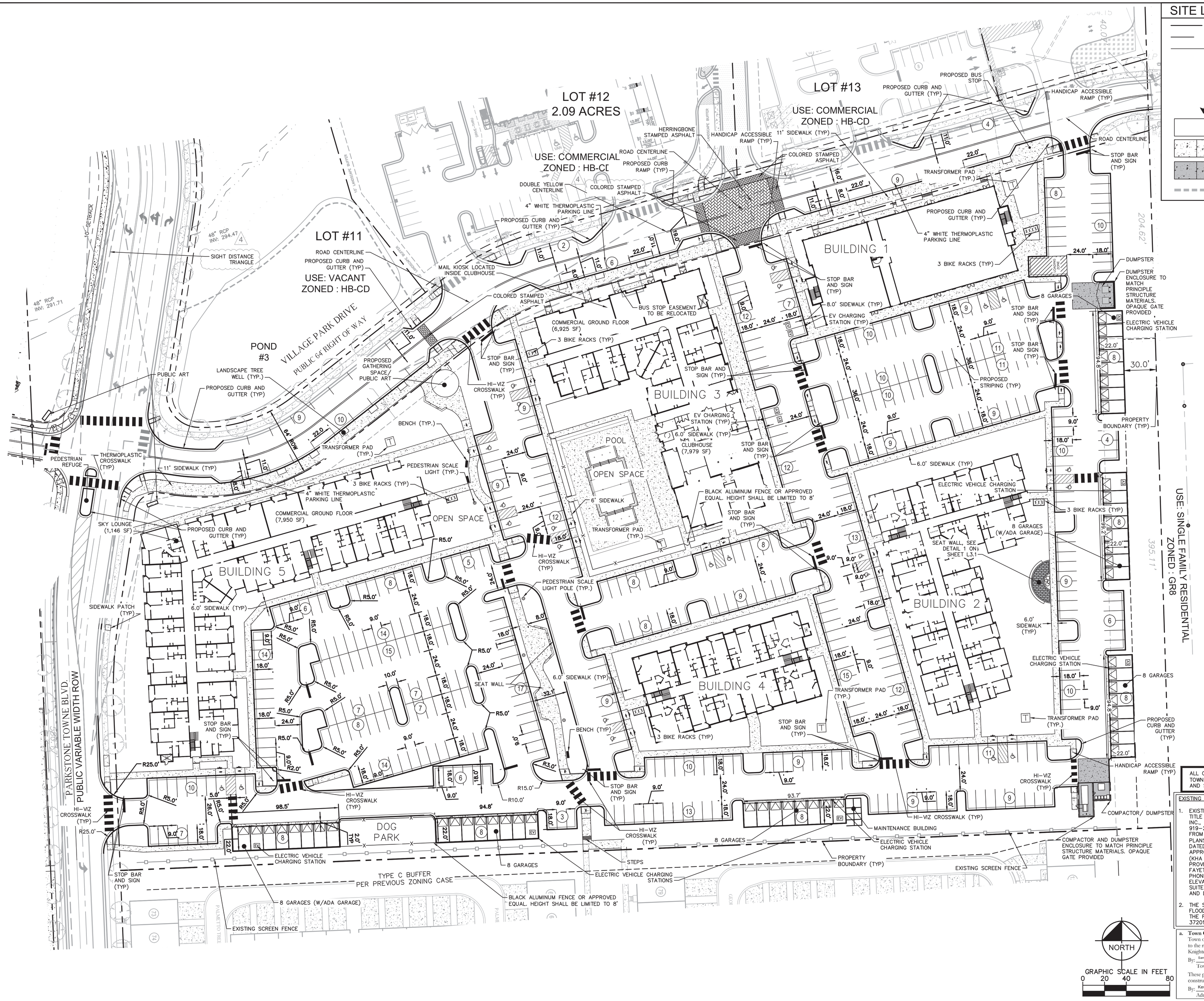

SITE LEGEND

- PROPERTY LINE
- EASEMENT LINE
- FENCE
- (8) PARKING SPACE COUNT
- SIGN (SEE PLAN)
- ACCESSIBLE PARKING MARKING (V INDICATES VAN ACCESSIBLE)
- DIRECTIONAL PAVEMENT ARROWS
- LIGHT DUTY ASPHALT
- CONCRETE SIDEWALK
- HEAVY DUTY CONCRETE
- ADA PATH

NOTE:

1. ALL DISTANCES SHOWN ARE HORIZONTAL GROUND DISTANCES IN U.S. SURVEY FEET. (UNLESS OTHERWISE STATED)
2. DIMENSIONS ARE TO FACE OF CURB UNLESS OTHERWISE NOTED.
3. MAIL KIOSK WILL BE IN BUILDING 3 AS PART OF THE CLUBHOUSE.
4. ALL PAVEMENT MARKINGS, EXCEPT FOR PARKING STALL SPACES, MUST BE HIGH VISIBILITY THERMOPLASTIC.

ALL CONSTRUCTION TO BE IN ACCORDANCE WITH ALL TOWN OF KNIGHTDALE AND/OR NCDOT STANDARDS AND SPECIFICATIONS.

EXISTING CONDITION NOTES:

1. EXISTING INFORMATION SHOWN FROM AN ALTA/ACSM LAND TITLE SURVEY PROVIDED BY CHANDLER LAND SURVEYING, INC., 83 ADAMS POINT DRIVE, GARNER, NC 27529, PHONE: 919-291-9163 AND DATED NOVEMBER 21, 2017 AND TAKEN FROM TOWN OF KNIGHTDALE APPROVED CONSTRUCTION PLANS FOR PARKSTONE AT KNIGHTDALE (KHA #017254001) DATED NOVEMBER 15, 2016, FROM TOWN OF KNIGHTDALE APPROVED CONSTRUCTION PLANS FOR PARKSTONE VILLAGE (KHA #017254009) DATED NOVEMBER 8, 2019 AND PROVIDED BY KIMLEY-HORN AND ASSOCIATES, 421 FAYETTEVILLE STREET, SUITE 600, RALEIGH, NC 27601, PHONE: 919-677-2000, AND FROM A SANITARY SEWER ELEVATION SURVEY PROVIDED BY RWK, PA, 101 W. MAIN ST SUITE 202M GARNER, NC 27529, PHONE: 919-779-4854 AND DATED NOVEMBER 10, 2021.
2. THE SUBJECT PROPERTY IS NOT LOCATED WITHIN A SPECIAL FLOOD HAZARD AREA. IT IS LOCATED IN ZONE X BASED ON THE FLOOD INSURANCE RATE MAP COMMUNITY MAP NUMBER 3720174400K DATED JULY 19, 2022.

a. Town Certification. This design has been reviewed by the Engineer for the Town of Knightdale, and to the best of my knowledge and belief, it conforms to the requirements established in the Standard Specifications of the Town of Knightdale.

By: Samuel A. MacDonald Date: _____
Town Engineer

These plans are approved by the Town of Knightdale and serve as construction plans for this project.

By: Kevin Lewis Date: _____
Administrator

No.	REVISIONS	DATE	BY
4	REVISED PER TOK COMMENTS	04/19/24	MDB
3	REVISED PER TOK COMMENTS	02/27/24	MDB
2	REVISED PER TOK COMMENTS	01/12/24	DPM
1	REVISED PER TOK COMMENTS	9/12/23	ASA

Kimley»Horn

© 2023 KIMLEY-HORN AND ASSOCIATES, INC.

421 FAYETTEVILLE STREET, SUITE 600, RALEIGH, NC 27601
PHONE: 919-677-2000 FAX: 919-677-2050
WWW.KIMLEY-HORN.COM

NORTH CAROLINA PROFESSIONAL SEAL 052434 ENGINEER TIMOTHY R. CARTER
4/25/2024

KHA PROJECT 017254013
DATE 06/26/2023
SCALE AS SHOWN
DESIGNED BY KEJ
DRAWN BY KEJ
CHECKED BY COB

SITE PLAN

DEWITT KNIGHTDALE

PREPARED FOR
WIDEWATERS

TOWN OF KNIGHTDALE NORTH CAROLINA

SHEET NUMBER
C2.0

This document, together with the concepts and designs presented herein, as an instrument of service, is intended only for the specific purpose and client for which it was prepared. Reuse of and improper reliance on this document without written authorization and adaptation by Kimley-Horn and Associates, Inc. shall be without liability to Kimley-Horn and Associates, Inc.

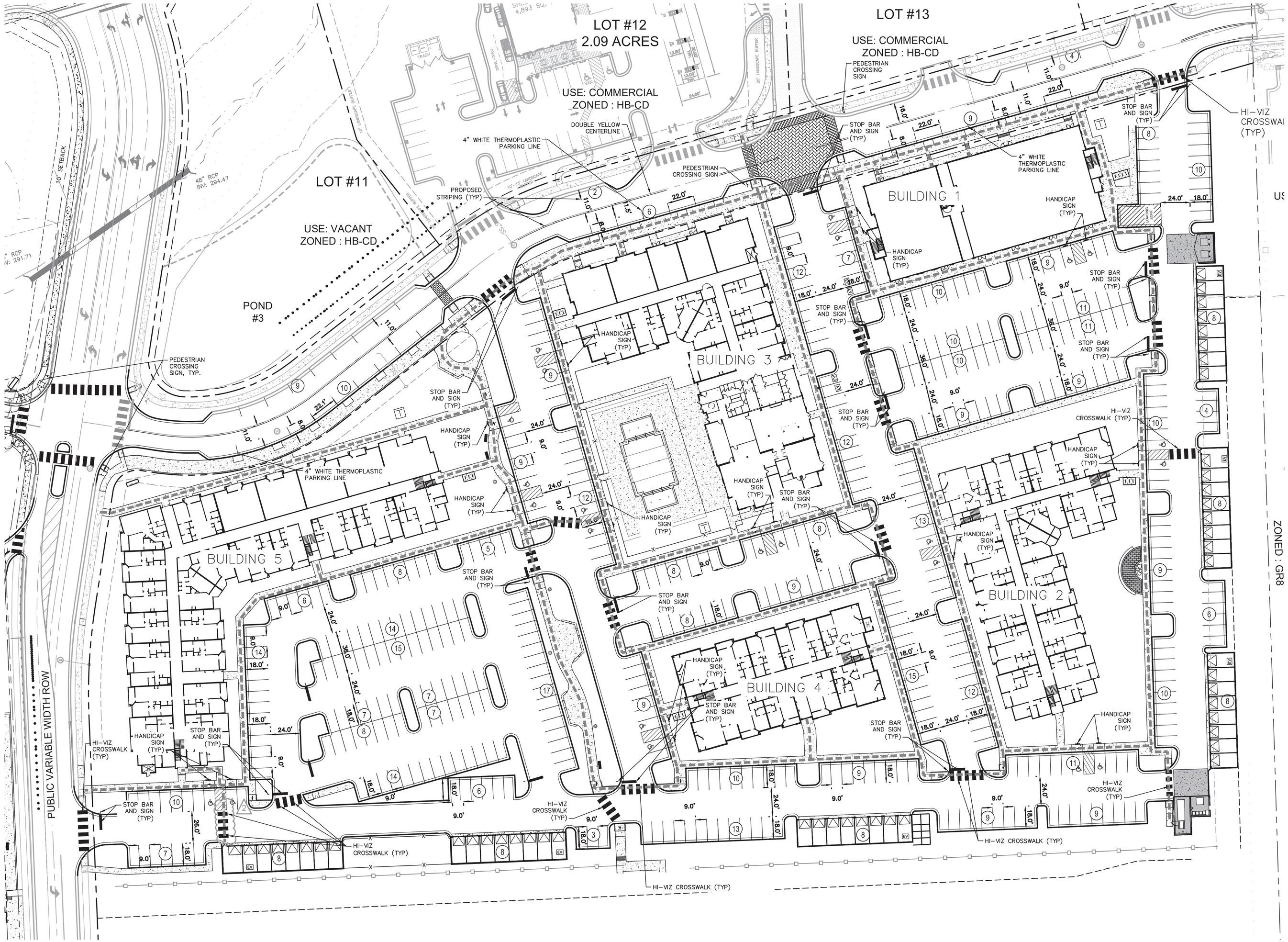

SITE LEGEND

- PROPERTY LINE
- EASEMENT LINE
- FENCE
- (8) PARKING SPACE COUNT
- SIGN (SEE PLAN)
- ACCESSIBLE PARKING MARKING (V INDICATES VAN ACCESSIBLE)
- DIRECTIONAL PAVEMENT ARROWS
- LIGHT DUTY ASPHALT
- CONCRETE SIDEWALK
- ADA PATH

NOTE:

1. ALL DISTANCES SHOWN ARE HORIZONTAL GROUND DISTANCES IN U.S. SURVEY FEET. (UNLESS OTHERWISE STATED)
2. DIMENSIONS ARE TO FACE OF CURB UNLESS OTHERWISE NOTED.
3. THERMOPLASTIC STRIPING TO BE USED FOR ALL PAVEMENT STRIPING EXCEPT PARKING STALLS.

No.	REVISIONS	DATE	BY
4	REVISED PER TOK COMMENTS	04/19/24	MDB
3	REVISED PER TOK COMMENTS	02/27/24	MDB
2	REVISED PER TOK COMMENTS	01/12/24	DPM
1	REVISED PER TOK COMMENTS	9/12/23	ASA

Kimley»Horn
421 FAYETTEVILLE STREET, SUITE 600, RALEIGH, NC 27601
PHONE: 919-677-2000 FAX: 919-677-2050
WWW.KIMLEY-HORN.COM

NORTH CAROLINA PROFESSIONAL ENGINEER SEAL 052434 MITCHEL R. CARTER
4/25/2024

GRAPHIC SCALE IN FEET
0 20 40 80

ALL CONSTRUCTION TO BE IN ACCORDANCE WITH ALL TOWN OF KNIGHTDALE AND/OR NCDOT STANDARDS AND SPECIFICATIONS.

EXISTING CONDITION NOTES:

1. EXISTING INFORMATION SHOWN FROM AN ALTA/ACSM LAND TITLE SURVEY PROVIDED BY CHANDLER LAND SURVEYING, INC., 83 ADAMS POINT DRIVE, GARNER, NC 27529, PHONE: 919-291-9163 AND DATED NOVEMBER 21, 2017 AND TAKEN FROM TOWN OF KNIGHTDALE APPROVED CONSTRUCTION PLANS FOR PARKSTONE AT KNIGHTDALE (KHA #017254001) DATED NOVEMBER 15, 2016, FROM TOWN OF KNIGHDALE APPROVED CONSTRUCTION PLANS FOR PARKSTONE VILLAGE (KHA #017254009) DATED NOVEMBER 8, 2019 AND PROVIDED BY KIMLEY-HORN AND ASSOCIATES, 421 FAYETTEVILLE STREET, SUITE 600, RALEIGH, NC 27601, PHONE: 919-677-2000, AND FROM A SANITARY SEWER ELEVATION SURVEY PROVIDED BY RWK, PA, 101 W. MAIN ST SUITE 202M GARNER, NC 27529, PHONE: 919-779-4854 AND DATED NOVEMBER 10, 2021.
2. THE SUBJECT PROPERTY IS NOT LOCATED WITHIN A SPECIAL FLOOD HAZARD AREA. IT IS LOCATED IN ZONE X BASED ON THE FLOOD INSURANCE RATE MAP COMMUNITY MAP NUMBER 3720174400K DATED JULY 19, 2022.

a. Town Certification. This design has been reviewed by the Engineer for the Town of Knightdale, and to the best of my knowledge and belief, it conforms to the requirements established in the Standard Specifications of the Town of Knightdale.

By: Samuel A. MacDonald Date: _____
Town Engineer

These plans are approved by the Town of Knightdale and serve as construction plans for this project.

By: Kevin Lewis Date: _____
Administrator

KHA PROJECT 017254013
DATE 06/26/2023
SCALE AS SHOWN
DESIGNED BY KEJ
DRAWN BY KEJ
CHECKED BY COB

SIGNAGE AND PAVEMENT MARKING PLAN

DEWITT KNIGHTDALE

PREPARED FOR WIDEWATERS

TOWN OF KNIGHTDALE NORTH CAROLINA

SHEET NUMBER
C2.1

Plotted By: Barnes, Michael Sheet Set: DeWitt Knightdale Layout: Layout2-Layout1 April 26, 2024 01:07:12pm K:\RAL_LDEV\017254013_DeWitt Knightdale\Planning Phase\16_CAD Files\PlanSheets\C2.1 SIGNAGE AND PAVEMENT MARKING PLAN.dwg
This document, together with the concepts and designs presented herein, as an instrument of service, is intended only for the specific purpose and client for which it was prepared. Reuse of and improper reliance on this document without written authorization and adaptation by Kimley-Horn and Associates, Inc. shall be without liability to Kimley-Horn and Associates, Inc.

Sediment Basin #1				
TOTAL DISTURBED DRAINAGE AREA	5.370	AC		
10-YEAR PEAK FLOW	17.43	CFS		
SURFACE AREA REQUIRED	7580	SF		
SURFACE AREA PROVIDED	8316	SF		
VOLUME REQUIRED	9666	CF		
VOLUME PROVIDED	17960	CF		
STORAGE DEPTH	2.5	FT		
TOP OF BERM	305	ELEV		
EMGY. SPILLWAY LENGTH	25	FT	303.50	ELEV
BOTTOM OF BASIN	5981	SF	301.00	ELEV
SKIMMER SIZE	1.5	IN		
SKIMMER ORIFICE DIAMETER	1.75	IN		
*BASED ON POND SIZING				

Sediment Basin #2				
TOTAL DISTURBED DRAINAGE AREA	3.900	AC		
10-YEAR PEAK FLOW	12.66	CFS		
SURFACE AREA REQUIRED	5505	SF		
SURFACE AREA PROVIDED	9463	SF		
VOLUME REQUIRED	7020	CF		
VOLUME PROVIDED	20001	CF		
STORAGE DEPTH	2.5	FT		
TOP OF BERM	305	ELEV		
EMGY. SPILLWAY LENGTH	20	FT	304.50	ELEV
BOTTOM OF BASIN	5025	SF	302.00	ELEV
SKIMMER SIZE	1.5	IN		
SKIMMER ORIFICE DIAMETER	1.75	IN		
*BASED ON POND SIZING				

LOT #12
2.09 ACRES
USE: COMMERCIAL
ZONED : HB-CD

LOT #13
USE: COMMERCIAL
ZONED : HB-CD

LOT #11
USE: VACANT
ZONED : HB-CD

VACANT
ED : HB

OUTPARCEL
LOT #12

INV. OUT=304.15

48" RCP
INV: 294.47

48" RCP
INV: 291.71

POND
#3

VILLAGE PARK DRIVE
PUBLIC 64' RIGHT OF WAY

PARKSTONE TOWNE BLVD.
PUBLIC VARIABLE WIDTH ROW

DA TSB#1

DA TSB#2

ZUNEL DR.

INLET PROTECTION (TYP.)

SILT FENCE OUTLET (TYP.)

NCG01 & PERMIT BOX FOR SELF INSPECTION RECORDS

DEDICATED AREA FOR EMPLOYEE PARKING, TYP.

PERMITS BOX & RAIN GAUGE

CONSTRUCTION ENTRANCE (TYP.)

CONCRETE WASHOUT (TYP.)

DEDICATED AREA FOR DEMOLITION, CONSTRUCTION AND OTHER WASTES, TYP.

TEMPORARY DIVERSION DITCH – 1A. GRASS LINED (TYP.)

CHECK DAM (TYP.)

TEMPORARY SEDIMENT BASIN #1

POROUS BAFFLES (TYP.)

15' TEMPORARY SLOPE DRAIN WITH HORSESHOE DRAIN (TYP.)

SKIMMER 1 SIZE 1.5 IN ORIFICE 1.75 IN SKIMMER TO BE PLACED ON ROCK PAD (TYP.)

PUMP SHOULD USE A FLOATING INTAKE AND THAT THE INTAKE SHOULD BE PLACED AT THE OUTLET ZONE OF THE TSB

EMERGENCY SPILLWAY (TYP.)

SILT BAG FOR MAINTENANCE AND CLOSEOUT OF SEDIMENT BASIN (TYP.)

STOCK PILE AREA, FOLLOW NCG01 STABILIZATION GUIDANCE (TYP.)

TEMPORARY DIVERSION DITCH – 2B. (TYP.)

TEMPORARY DIVERSION DITCH – 1B. GRASS LINED (TYP.)

TEMPORARY SEDIMENT BASIN #2

EMERGENCY SPILLWAY (TYP.)

POROUS BAFFLES (TYP.)

15' TEMPORARY SLOPE DRAIN WITH HORSESHOE DRAIN(TYP.)

TEMPORARY DIVERSION DITCH – 2A. GRASS LINED (TYP.)

CHECK DAM (TYP.)

SKIMMER TO BE PLACED ON ROCK PAD (TYP.)

SKIMMER 2 SIZE 1.5 IN ORIFICE 1.75 IN

EROSION CONTROL LEGEND

- EXISTING CONTOUR
- PROPOSED CONTOUR
- SILT FENCE OUTLET
- SILT FENCE
- TREE PROTECTION FENCE
- TEMPORARY DIVERSION DITCH
- SILT FENCE/TREE PROTECTION FENCE
- LIMITS OF DISTURBANCE
- POROUS BAFFLE
- BASIN DRAINAGE AREA
- SKIMMER
- TEMPORARY CONSTRUCTION ENTRANCE
- RIP RAP OUTLET PROTECTION
- INLET PROTECTION
- CHECK DAM
- 3:1 GREATER SLOPE
- DEWATERING PUMP
- DIRTBAG
- SLOPE DRAIN
- SILT BAG

CONSTRUCTION SEQUENCE PHASE 1

1. SCHEDULE AN INITIAL PRE-CONSTRUCTION CONFERENCE WITH THE TOWN OF KNIGHTDALE. OBTAIN A LAND-DISTURBANCE PERMIT.
2. INSTALL ALL PERIMETER CONTROLS AS SHOWN ON THE APPROVED PLANS, CLEAR ONLY AS NECESSARY TO INSTALL THESE DEVICES.
3. CALL JOHN STOVER AT 919-217-2258 FOR AN ONSITE PRE-CONSTRUCTION MEETING TO INSPECT THE INSTALLED PERIMETER CONTROLS.
4. IF APPROVED, PROCEED WITH INSTALLING GRAVEL CONSTRUCTION PAD, TEMPORARY DIVERSIONS, SILT FENCE, SEDIMENT BASINS OR OTHER MEASURES AS SHOWN ON THE APPROVED PLANS. CLEAR ONLY AS NECESSARY TO INSTALL THESE DEVICES. SEED TEMPORARY DIVERSIONS, BERMS, AND BASINS IMMEDIATELY AFTER CONSTRUCTION.
5. CALL JOHN STOVER AT 919-217-2258 TO SCHEDULE AN ONSITE INSPECTION AND OBTAIN A CERTIFICATE OF COMPLIANCE.
6. BEGIN CLEARING AND GRUBBING, MAINTAIN DEVICES AS NEEDED. ROUGH GRADE SITE.

EXISTING CONDITION NOTES:

1. EXISTING INFORMATION SHOWN FROM AN ALTA/ACSM LAND TITLE SURVEY PROVIDED BY CHANDLER LAND SURVEYING, INC., 83 ADAMS POINT DRIVE, GARNER, NC 27529, PHONE: 919-291-9163 AND DATED NOVEMBER 21, 2017 AND TAKEN FROM TOWN OF KNIGHTDALE APPROVED CONSTRUCTION PLANS FOR PARKSTONE AT KNIGHTDALE (KHA #017254001) DATED NOVEMBER 15, 2016, FROM TOWN OF KNIGHTDALE APPROVED CONSTRUCTION PLANS FOR PARKSTONE VILLAGE (KHA #017254009) DATED NOVEMBER 8, 2019 AND PROVIDED BY KIMLEY-HORN AND ASSOCIATES, 421 FAYETTEVILLE STREET, SUITE 600, RALEIGH, NC 27601, PHONE: 919-677-2000, AND FROM A SANITARY SEWER ELEVATION SURVEY PROVIDED BY RWK, PA, 101 W. MAIN ST SUITE 202M GARNER, NC 27529, PHONE: 919-779-4854 AND DATED NOVEMBER 10, 2021.
2. THE SUBJECT PROPERTY IS NOT LOCATED WITHIN A SPECIAL FLOOD HAZARD AREA. IT IS LOCATED IN ZONE X BASED ON THE FLOOD INSURANCE RATE MAP COMMUNITY MAP NUMBER 3720174400J DATED MAY 2, 2006.

ALL CONSTRUCTION TO BE IN ACCORDANCE WITH ALL TOWN OF KNIGHTDALE AND/OR NCDOT STANDARDS AND SPECIFICATIONS.

LIMITS OF DISTURBANCE:
522,720 SF (12.00 AC)

NORTH

GRAPHIC SCALE IN FEET
0 20 40 80

REQUIRED WAKE COUNTY STOCKPILE NOTES

1. STOCKPILE HEIGHT SHALL NOT EXCEED 35'.
2. STOCKPILE SLOPES MUST BE 2:1OR FLATTER.
3. SEEDING OR COVERING STOCKPILES WITH TARPS OR MULCH IS REQUIRED AND WILL REDUCE EROSION PROBLEMS. TARPS SHOULD BE KEYED IN AT THE TOP OF THE SLOPE TO KEEP WATER FROM RUNNING UNDERNEATH THE PLASTIC.
4. IF A STOCKPILE IS TO REMAIN FOR FUTURE USE AFTER THE PROJECT IS COMPLETE (BUILDERS, ETC.), THE FINANCIALLY RESPONSIBLE PARTY MUST NOTIFY WAKE COUNTY OF A NEW RESPONSIBLE PARTY FOR THAT STOCKPILE.
5. THE APPROVED PLAN SHALL PROVIDE THE USE OF STAGED SEEDING AND MULCHING ON A CONTINUAL BASIS WHILE THE STOCKPILE IS IN USE.
6. ESTABLISH AND MAINTAIN A VEGETATIVE BUFFER AT THE TOE OF THE SLOPE (WHERE PRACTICAL).

a. Town Certification. This design has been reviewed by the Engineer for the Town of Knightdale, and to the best of my knowledge and belief, it conforms to the requirements established in the Standard Specifications of the Town of Knightdale.

By: Samuel A. MacDonald Date: _____
Town Engineer

These plans are approved by the Town of Knightdale and serve as construction plans for this project.

By: Kevin Lewis Date: _____
Administrator

No.	REVISIONS	DATE	BY
3	REVISED PER TOK COMMENTS	02/27/24	MDB
2	REVISED PER TOK COMMENTS	01/12/24	DPM
1	REVISED PER TOK COMMENTS	9/12/23	ASA

Kimley»Horn
© 2023 KIMLEY-HORN AND ASSOCIATES, INC.
421 FAYETTEVILLE STREET, SUITE 600, RALEIGH, NC 27601
PHONE: 919-677-2000 FAX: 919-677-2050
WWW.KIMLEY-HORN.COM
#F-0102

NORTH CAROLINA PROFESSIONAL ENGINEER SEAL 032434 TIMOTHY R. CARTER 4/25/2024

KHA PROJECT 017254013	
DATE	06/26/2023
SCALE	AS SHOWN
DESIGNED BY	KEJ
DRAWN BY	KEJ
CHECKED BY	COB

EROSION CONTROL PHASE 1

DEWITT KNIGHTDALE
PREPARED FOR
WIDEWATERS
NORTH CAROLINA
TOWN OF KNIGHTDALE

SHEET NUMBER
C3.0

Plotted By: Barnes, Michael Sheet Set: DeWitt Knightdale Layout: 3.0 EROSION CONTROL PHASE 1 March 06, 2024 02:49:41pm K:\RAL_LDEV\017254013_DeWitt Knightdale\Planning Phase\16_CAD Files\PlanSheets\3.0 EROSION CONTROL PHASE 1.dwg
This document, together with the concepts and designs presented herein, as an instrument of service, is intended only for the specific purpose and client for which it was prepared. Reuse of and improper reliance on this document without written authorization and adaptation by Kimley-Horn and Associates, Inc. shall be without liability to Kimley-Horn and Associates, Inc.

REQUIRED TOWN OF KNIGHTDALE BASIN REMOVAL AND/OR CONVERSION SEQUENCE

1. SCHEDULE A SITE MEETING WITH THE TOWN OF KNIGHTDALE EROSION CONTROL INSPECTOR, DOMINGO ORPILLA AT 919-217-2254, TO DETERMINE IF A BASIN CAN BE REMOVED. INSTALL SILT FENCING OR OTHER TEMPORARY EROSION CONTROL MEASURES AS NEEDED PRIOR TO REMOVAL OF THE BASIN.
2. CONTACT NCDEQ - RALEIGH REGIONAL OFFICE 919-791-4200 TO DETERMINE THE DIVISION OF ENERGY, MINERAL AND LAND RESOURCES CONTACT PERSON TO RECEIVE DEWATERING NOTIFICATIONS. AT LEAST 10 DAYS PRIOR TO BEGINNING DEWATERING ACTIVITY, SEND EMAIL TO NCDEQ-DEMLR CONTACT PERSON AND COPY ENVIRONMENTAL CONSULTANT THAT MET YOU ONSITE. THE EMAIL SHOULD INCLUDE E&SC JURISDICTION: TOWN OF KNIGHTDALE, TOK PROJECT: NAME, NUMBER, AND LOCATION (CITY/TOWN), ENVIRONMENTAL CONSULTANT NAME, AND ADDRESS THE FOLLOWING: A) REASON FOR CONVERSION, B) BASIN #, C) DEWATERING METHOD, AND D) ALL OTHER NECESSARY INFO FROM PART II, SECTION G, ITEM 4 OF THE NCG01. (KEEP EMAIL FOR YOUR NPDES MONITORING DOCUMENTATION.)
3. AFTER RECEIVING POSITIVE CONFIRMATION FROM NCDEQ-DEMLR THAT YOU MAY REMOVE THE BASIN OR ON > DAY 11, WHICHEVER IS SOONER, REMOVE BASIN(S) AND ASSOCIATED TEMPORARY DIVERSION DITCHES. IF PIPES NEED TO BE EXTENDED, PERFORM THIS OPERATION AT THIS TIME. FINE GRADE AREA IN PREPARATION FOR SEEDING.
4. PERFORM SEEDBED PREPARATION, SEED, MULCH AND ANCHOR ANY RESULTING BARE AREAS IMMEDIATELY USING NON-CLUMPING TURF GRASS (CENTIPEDE / HYBRID BERMUDA).
5. INSTALL VELOCITY DISSIPATORS AND/OR LEVEL SPREADERS AS REQUIRED ON THE EROSION CONTROL PLAN.
6. WHEN SITE IS FULLY STABILIZED, CALL DOMINGO ORPILLA AT 919-217-2254 FOR APPROVAL OF REMOVING REMAINING TEMPORARY EROSION CONTROL MEASURES AND ADVICE ON WHEN SITE CAN BE ISSUED A CERTIFICATE OF COMPLETION.

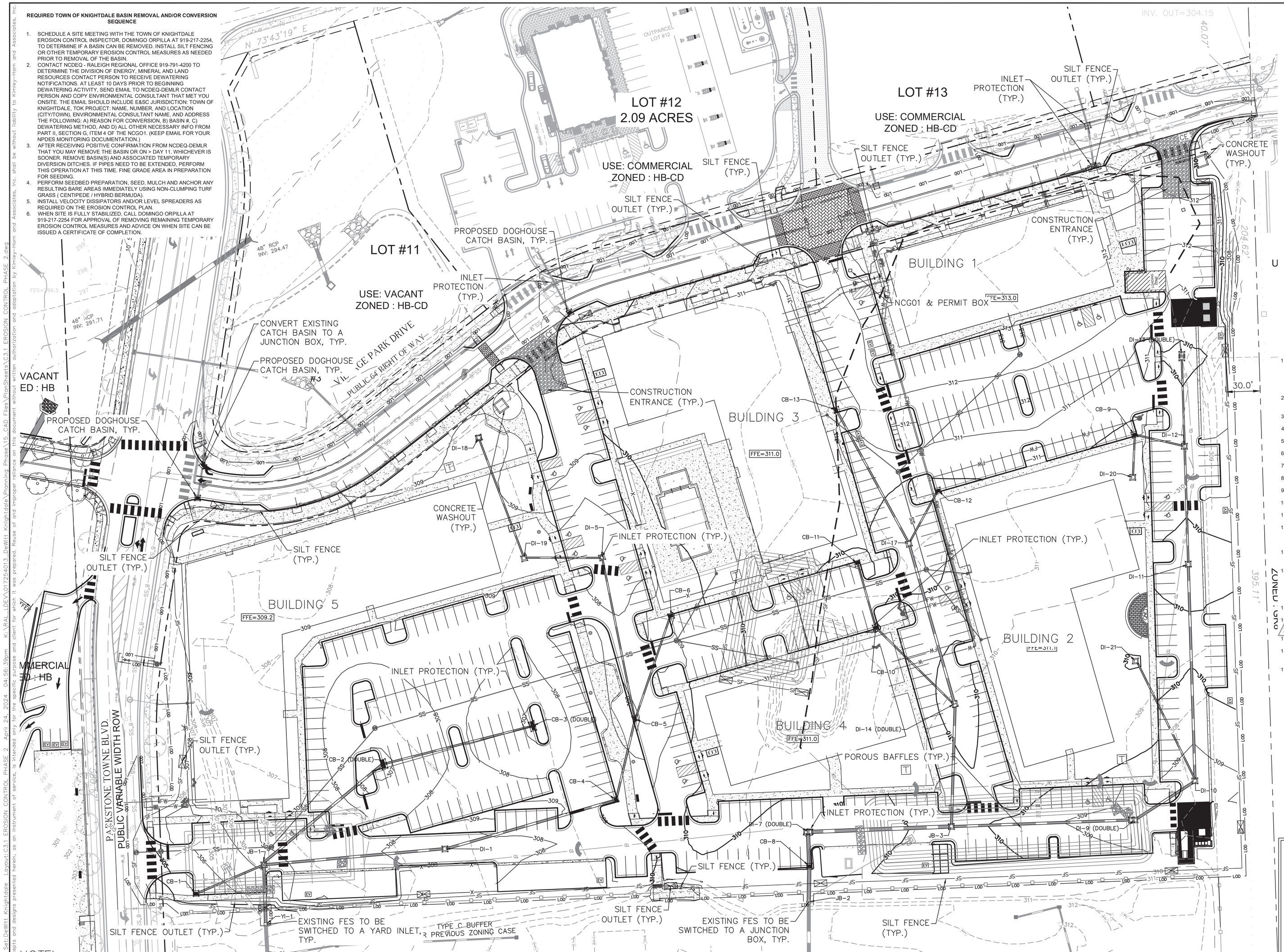

EROSION CONTROL LEGEND

- EXISTING CONTOUR
- PROPOSED CONTOUR
- SILT FENCE OUTLET
- SILT FENCE
- TREE PROTECTION FENCE
- TEMPORARY DIVERSION DITCH
- SILT FENCE/TREE PROTECTION FENCE
- LIMITS OF DISTURBANCE
- POROUS BAFFLE
- BASIN DRAINAGE AREA
- SKIMMER
- TEMPORARY CONSTRUCTION ENTRANCE
- RIP RAP OUTLET PROTECTION
- INLET PROTECTION
  - USE CURB INLET PROTECTION FOR CB
  - USE GRAVEL YARD INLET PROTECTION FOR YI
  - USE PIPE INLET PROTECTION FOR DI
- CHECK DAM
- 3:1 GREATER SLOPE
- DEWATERING PUMP
- DIRTBAG

CONSTRUCTION SEQUENCE PHASE 2

1. BEGIN INSTALLING STORM SEWER, AS SHOWN, AND PROTECT INLETS WITH INLET PROTECTION AS DEPICTED ON SHEET C9.0. CONTRACTOR TO CONFIRM DOWNSTREAM STORM CONNECTION INVERT PRIOR TO INSTALLATION OF UPSTREAM STORM PIPES TO CONFIRM REQUIRED FALL IS ACHIEVABLE.
2. STORM SEWER TO BE INSTALLED UPSTREAM FOR EACH RUN TO AVOID CONSTRUCTION IN THE BASINS.
3. BEGIN INSTALLATION OF STORM PIPES FROM INLET DI-18 TO INLET DI-1.
4. BEGIN INSTALLATION OF STORM PIPES FROM INLET CB-6 TO INLET CB-5.
5. BEGIN INSTALLATION OF STORM PIPES FROM INLET CB-3 TO INLET CB-2.
6. BEGIN INSTALLATION OF STORM PIPES FROM INLET DI-13 TO INLET DI-10.
7. BEGIN INSTALLATION OF STORM PIPES FROM INLET DI-20 TO INLET DI-12.
8. BEGIN INSTALLATION OF STORM PIPES FROM INLET DI-21 TO INLET DI-10.
9. BEGIN INSTALLATION OF STORM PIPES FROM INLET CB-13 TO INLET DI-14.
10. BEGIN INSTALLATION OF STORM PIPES FROM INLET CB-12 TO INLET DI-17.
11. BEGIN INSTALLATION OF STORM PIPES FROM INLET CB-11 TO INLET DI-14.
12. STORM DRAINS DISCHARGING INTO SEDIMENT BASINS SHALL DISCHARGE BEHIND THE BAFFELS AND MAY REQUIRE TEMPORARY PIPES TO ACHIEVE THIS.
13. INSTALL WATER/SEWER PIPES AND CURB UP TO THE SEDIMENT BASIN AREAS.
14. STABILIZE SITE AS AREAS ARE BROUGHT UP TO FINISH GRADE WITH VEGETATION, PAVING, DITCH LININGS, ETC. SEED AND MULCH DENUDED AREAS PER GROUND STABILIZATION TIME FRAMES.SEDIMENT BASINS TO REMAIN IN PLACE WHILE HARDSCAPE UP TO FINAL LIFT IS BEING INSTALLED OVER STORM PIPES.
15. STABILIZE BUILDING PAD AREAS.
16. ONCE ALL UPSTREAM HARDSCAPE HAS BEEN INSTALLED CONTACT JOHN STOVER AT 919-217-2258 FOR INSPECTION.
17. UPON APPROVAL, BEGIN REMOVAL OF SEDIMENT BASINS.
18. INSTALL REMAINING WATER, SEWER, AND STORM PIPE SECTIONS CONNECTING TO EXISTING TIE-IN POINTS.
19. COMPLETE STABILIZATION OF SITE AND CONSTRUCTION OF HARDSCAPE INFRASTRUCTURE.

LIMITS OF DISTURBANCE:
522,720 SF (12.00 AC)

ALL CONSTRUCTION TO BE IN ACCORDANCE WITH ALL TOWN OF KNIGHTDALE AND/OR NCDOT STANDARDS AND SPECIFICATIONS.

EXISTING CONDITION NOTES:

1. EXISTING INFORMATION SHOWN FROM AN ALTA/ACSM LAND TITLE SURVEY PROVIDED BY CHANDLER LAND SURVEYING, INC., 83 ADAMS POINT DRIVE, GARNER, NC 27529, PHONE: 919-291-9163 AND DATED NOVEMBER 21, 2017 AND TAKEN FROM TOWN OF KNIGHTDALE APPROVED CONSTRUCTION PLANS FOR PARKSTONE AT KNIGHTDALE (KHA #017254001) DATED NOVEMBER 15, 2016, FROM TOWN OF KNIGHTDALE APPROVED CONSTRUCTION PLANS FOR PARKSTONE VILLAGE (KHA #017254009) DATED NOVEMBER 8, 2019 AND PROVIDED BY KIMLEY-HORN AND ASSOCIATES, 421 FAYETTEVILLE STREET, SUITE 600, RALEIGH, NC 27601, PHONE: 919-677-2000, AND FROM A SANITARY SEWER ELEVATION SURVEY PROVIDED BY RWK, PA, 101 W. MAIN ST SUITE 202M GARNER, NC 27529, PHONE: 919-779-4854 AND DATED NOVEMBER 10, 2021.
2. THE SUBJECT PROPERTY IS NOT LOCATED WITHIN A SPECIAL FLOOD HAZARD AREA. IT IS LOCATED IN ZONE X BASED ON THE FLOOD INSURANCE RATE MAP COMMUNITY MAP NUMBER 3720174400K DATED JULY 19, 2022.

a. Town Certification. This design has been reviewed by the Engineer for the Town of Knightdale, and to the best of my knowledge and belief, it conforms to the requirements established in the Standard Specifications of the Town of Knightdale.

By: _____ Date: _____
Town Engineer

These plans are approved by the Town of Knightdale and serve as construction plans for this project.

By: Kevin Lewis Date: _____
Administrator

NOTES:
1. THE SCM DOWNSTREAM IS PART OF A SEPARATE PROJECT, BUT HAS THE POTENTIAL TO RECEIVE SUBSTANTIAL SEDIMENT LOADS IF THIS SITES ESC MEASURES ARE NOT PROPERLY MAINTAINED.
2. THE LOWER SCM CANNOT BE CERTIFIED UNTIL AT LEAST 70% OF THE DRAINAGE AREAS CO5 HAVE BEEN ISSUED.
3. THE STORM DRAIN DISCHARGING INTO SEDIMENT BASINS SHALL DISCHARGE BEHIND THE BAFFLES AND MAY REQUIRE TEMPORARY PIPES TO ACHIEVE THIS.

NORTH
GRAPHIC SCALE IN FEET
0 20 40 80

REQUIRED WAKE COUNTY STOCKPILE NOTES

1. STOCKPILE HEIGHT SHALL NOT EXCEED 35'.
2. STOCKPILE SLOPES MUST BE 2:1OR FLATTER.
3. SEEDING OR COVERING STOCKPILES WITH TARPS OR MULCH IS REQUIRED AND WILL REDUCE EROSION PROBLEMS. TARPS SHOULD BE KEYED IN AT THE TOP OF THE SLOPE TO KEEP WATER FROM RUNNING UNDERNEATH THE PLASTIC.
4. IF A STOCKPILE IS TO REMAIN FOR FUTURE USE AFTER THE PROJECT IS COMPLETE (BUILDERS, ETC.), THE FINANCIALLY RESPONSIBLE PARTY MUST NOTIFY WAKE COUNTY OF A NEW RESPONSIBLE PARTY FOR THAT STOCKPILE.
5. THE APPROVED PLAN SHALL PROVIDE THE USE OF STAGED SEEDING AND MULCHING ON A CONTINUAL BASIS WHILE THE STOCKPILE IS IN USE.
6. ESTABLISH AND MAINTAIN A VEGETATIVE BUFFER AT THE TOE OF THE SLOPE (WHERE PRACTICAL).

No.	REVISIONS	DATE	BY
4	REVISED PER TOK COMMENTS	04/19/24	MDB
3	REVISED PER TOK COMMENTS	02/27/24	MDB
2	REVISED PER TOK COMMENTS	01/12/24	DPM
1	REVISED PER TOK COMMENTS	9/12/23	ASA

Kimley»Horn
© 2023 KIMLEY-HORN AND ASSOCIATES, INC.
421 FAYETTEVILLE STREET, SUITE 600, RALEIGH, NC 27601
PHONE: 919-677-2000 FAX: 919-677-2050
WWW.KIMLEY-HORN.COM
#F-0102

NORTH CAROLINA PROFESSIONAL ENGINEER SEAL 052434 TIMOTHY R. CARTER
4/25/2024

KHA PROJECT	017254013
DATE	06/26/2023
SCALE	AS SHOWN
DESIGNED BY	KEJ
DRAWN BY	KEJ
CHECKED BY	COB

EROSION CONTROL PHASE 2

DEWITT KNIGHTDALE
PREPARED FOR
WIDEWATERS
TOWN OF KNIGHTDALE NORTH CAROLINA

SHEET NUMBER
C3.1

Plotted By: Barnes, Michael Sheet Set: DeWitt Knightdale Layout: C3.1 EROSION CONTROL PHASE 2 April 24, 2024 - 04:56:39pm K:\RAL_LDE\017254013_DeWitt Knightdale\Planning Phase\15_CAD Files\PlanSheets\C3.1 EROSION CONTROL PHASE 2.dwg
This document, together with the concepts and designs presented herein, as an instrument of service, is intended only for the specific purpose and client for which it was prepared. Reuse of and improper reliance on this document without written authorization and adaptation by Kimley-Horn and Associates, Inc. shall be without liability to Kimley-Horn and Associates, Inc.

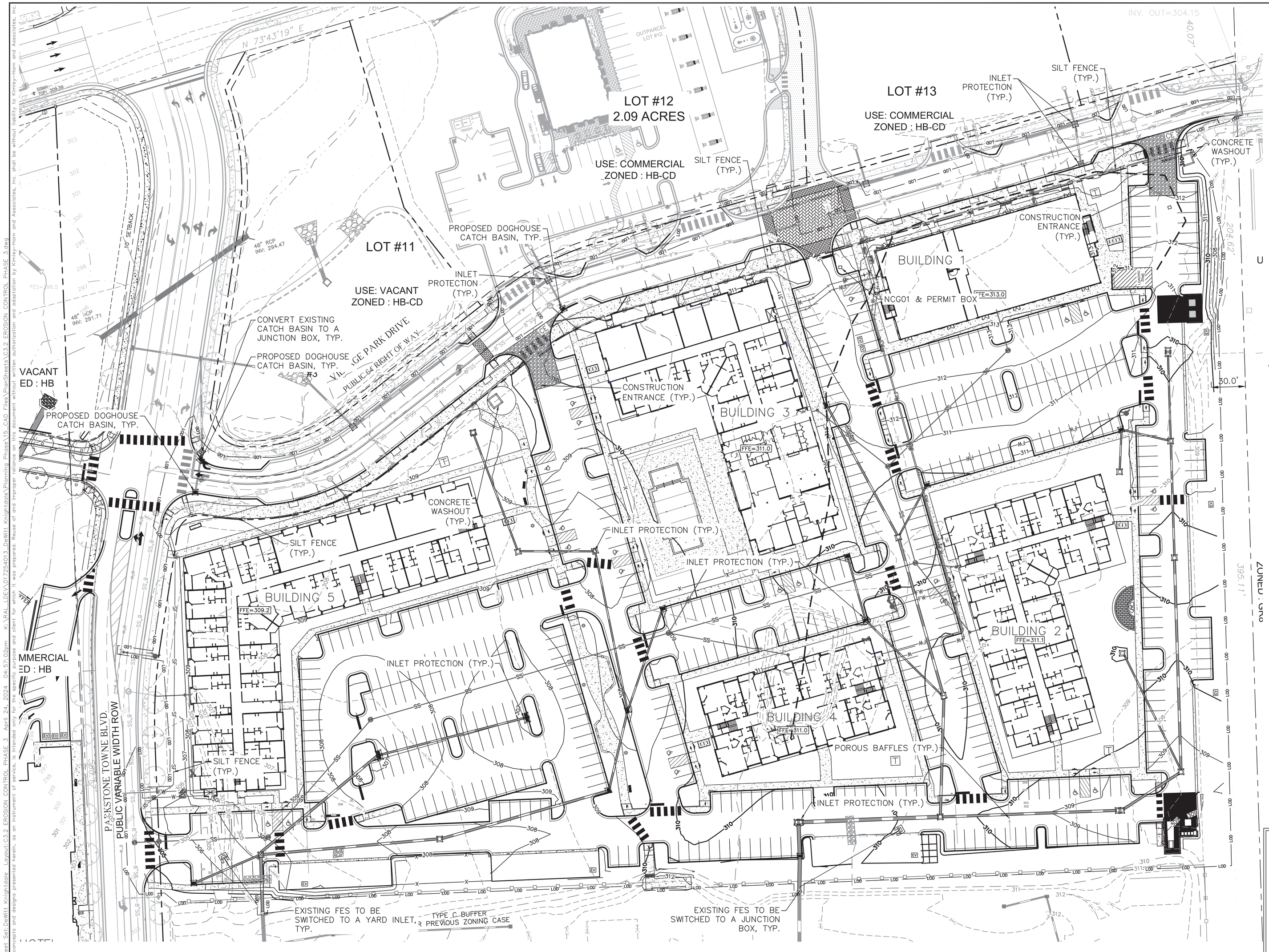

EROSION CONTROL LEGEND

- EXISTING CONTOUR
- PROPOSED CONTOUR
- SILT FENCE OUTLET
- SILT FENCE
- TREE PROTECTION FENCE
- TEMPORARY DIVERSION DITCH
- SILT FENCE/TREE PROTECTION FENCE
- LIMITS OF DISTURBANCE
- POROUS BAFFLE
- BASIN DRAINAGE AREA
- SKIMMER
- TEMPORARY CONSTRUCTION ENTRANCE
- RIP RAP OUTLET PROTECTION
- INLET PROTECTION
  - –USE CURB INLET PROTECTION FOR CB
  - –USE GRAVEL YARD INLET PROTECTION FOR YI
  - –USE PIPE INLET PROTECTION FOR DI
- CHECK DAM
- 3:1 GREATER SLOPE
- DEWATERING PUMP
- DIRTBAG

CONSTRUCTION SEQUENCE PHASE 3

1. INSTALL REMAINING EROSION CONTROL MEASURES SHOWN IN THIS PHASE OF CONSTRUCTION. (1)
2. CALL JOHN STOVER AT 919-217-2258 FOR SITE INSPECTION.
3. UPON APPROVAL, BEGIN BUILDING CONSTRUCTION, MAINTAIN EROSION CONTROL DEVICES AS NEEDED.
4. BEGIN FINISHING ASPHALT LAYER AND REPAIR ANY CURBS OR GUTTERS DAMAGED IN BUILDING CONSTRUCTION.
5. WHEN CONSTRUCTION IS COMPLETE AND ALL AREAS ARE STABILIZED COMPLETELY, CALL JOHN STOVER AT 919-217-2258 FOR INSPECTION. (2)
6. IF SITE IS APPROVED, REMOVE ALL REMAING EROSION CONTROL MEASURES, AND SEED OUT OR STABILIZE ANY RESULTING BARE AREAS. ALL REMAINING PERMANENT EROSION CONTROL DEVICES, SUCH AS VELOCITY DISSIPATORS, SHOULD NOW BE INSTALLED.
7. WHEN VEGETATION HAS BECOME ESTABLISHED (90% GERMINATION), CALL JOHN STOVER AT 919-217-2258 FOR A FINAL INSPECTION. OBTAIN A CERTIFICATE OF COMPLETION. (3)

LIMITS OF DISTURBANCE:
522,720 SF (12.00 AC)

ALL CONSTRUCTION TO BE IN ACCORDANCE WITH ALL TOWN OF KNIGHTDALE AND/OR NCDOT STANDARDS AND SPECIFICATIONS.

EXISTING CONDITION NOTES:

1. EXISTING INFORMATION SHOWN FROM AN ALTA/ACSM LAND TITLE SURVEY PROVIDED BY CHANDLER LAND SURVEYING, INC., 83 ADAMS POINT DRIVE, GARNER, NC 27529, PHONE: 919–291–9163 AND DATED NOVEMBER 21, 2017 AND TAKEN FROM TOWN OF KNIGHTDALE APPROVED CONSTRUCTION PLANS FOR PARKSTONE AT KNIGHTDALE (KHA #017254001) DATED NOVEMBER 15, 2016, FROM TOWN OF KNIGHDALE APPROVED CONSTRUCTION PLANS FOR PARKSTONE VILLAGE (KHA #017254009) DATED NOVEMBER 8, 2019 AND PROVIDED BY KIMLEY–HORN AND ASSOCIATES, 421 FAYETTEVILLE STREET, SUITE 600, RALEIGH, NC 27601, PHONE: 919–677–2000, AND FROM A SANITARY SEWER ELEVATION SURVEY PROVIDED BY RWK, PA, 101 W. MAIN ST SUITE 202M GARNER, NC 27529, PHONE: 919–779–4854 AND DATED NOVEMBER 10, 2021.
2. THE SUBJECT PROPERTY IS NOT LOCATED WITHIN A SPECIAL FLOOD HAZARD AREA. IT IS LOCATED IN ZONE X BASED ON THE FLOOD INSURANCE RATE MAP COMMUNITY MAP NUMBER 3720174400K DATED JULY 19, 2022.

a. Town Certification. This design has been reviewed by the Engineer for the Town of Knightdale, and to the best of my knowledge and belief, it conforms to the requirements established in the Standard Specifications of the Town of Knightdale.

By: Samuel A. MacDonald Date: _____
Town Engineer

These plans are approved by the Town of Knightdale and serve as construction plans for this project.

By: Kevin Lewis Date: _____
Administrator

NORTH

GRAPHIC SCALE IN FEET
0 20 40 80

REQUIRED WAKE COUNTY STOCKPILE NOTES

1. STOCKPILE HEIGHT SHALL NOT EXCEED 35'.
2. STOCKPILE SLOPES MUST BE 2:1OR FLATTER.
3. SEEDING OR COVERING STOCKPILES WITH TARPS OR MULCH IS REQUIRED AND WILL REDUCE EROSION PROBLEMS. TARPS SHOULD BE KEYED IN AT THE TOP OF THE SLOPE TO KEEP WATER FROM RUNNING UNDERNEATH THE PLASTIC.
4. IF A STOCKPILE IS TO REMAIN FOR FUTURE USE AFTER THE PROJECT IS COMPLETE (BUILDERS, ETC.), THE FINANCIALLY RESPONSIBLE PARTY MUST NOTIFY WAKE COUNTY OF A NEW RESPONSIBLE PARTY FOR THAT STOCKPILE.
5. THE APPROVED PLAN SHALL PROVIDE THE USE OF STAGED SEEDING AND MULCHING ON A CONTINUAL BASIS WHILE THE STOCKPILE IS IN USE.
6. ESTABLISH AND MAINTAIN A VEGETATIVE BUFFER AT THE TOE OF THE SLOPE (WHERE PRACTICAL).

No.	REVISIONS	DATE	BY
4	REVISED PER TOK COMMENTS	04/19/24	MDB
3	REVISED PER TOK COMMENTS	02/27/24	MDB
2	REVISED PER TOK COMMENTS	01/12/24	DPM
1	REVISED PER TOK COMMENTS	9/12/23	ASA

Kimley»Horn
© 2023 KIMLEY–HORN AND ASSOCIATES, INC.
421 FAYETTEVILLE STREET, SUITE 600, RALEIGH, NC 27601
PHONE: 919–677–2000 FAX: 919–677–2050
WWW.KIMLEY–HORN.COM
#F–0102

NORTH CAROLINA PROFESSIONAL ENGINEER SEAL 052434 TIMOTHY R. CARTER
4/25/2024

KHA PROJECT 017254013
DATE 06/26/2023
SCALE AS SHOWN
DESIGNED BY KEJ
DRAWN BY KEJ
CHECKED BY COB

EROSION CONTROL PHASE 3

DEWITT KNIGHTDALE

PREPARED FOR
WIDEWATERS

TOWN OF KNIGHTDALE NORTH CAROLINA

SHEET NUMBER
C3.2

Plotted By:Barnes, Michael Sheet Set:DeWitt Knightdale Layout:C3.2 EROSION CONTROL PHASE 3 April 24, 2024 04:57:09pm K:\RAL_LDEV\017254013_DeWitt Knightdale\Planning Phase\CS-CAD Files\PlanSheets\C3.2 EROSION CONTROL PHASE 3.dwg
This document, together with the concepts and designs presented herein, as an instrument of service, is intended only for the specific purpose and client for which it was prepared. Reuse of and improper reliance on this document without written authorization and adaptation by Kimley–Horn and Associates, Inc. shall be without liability to Kimley–Horn and Associates, Inc.

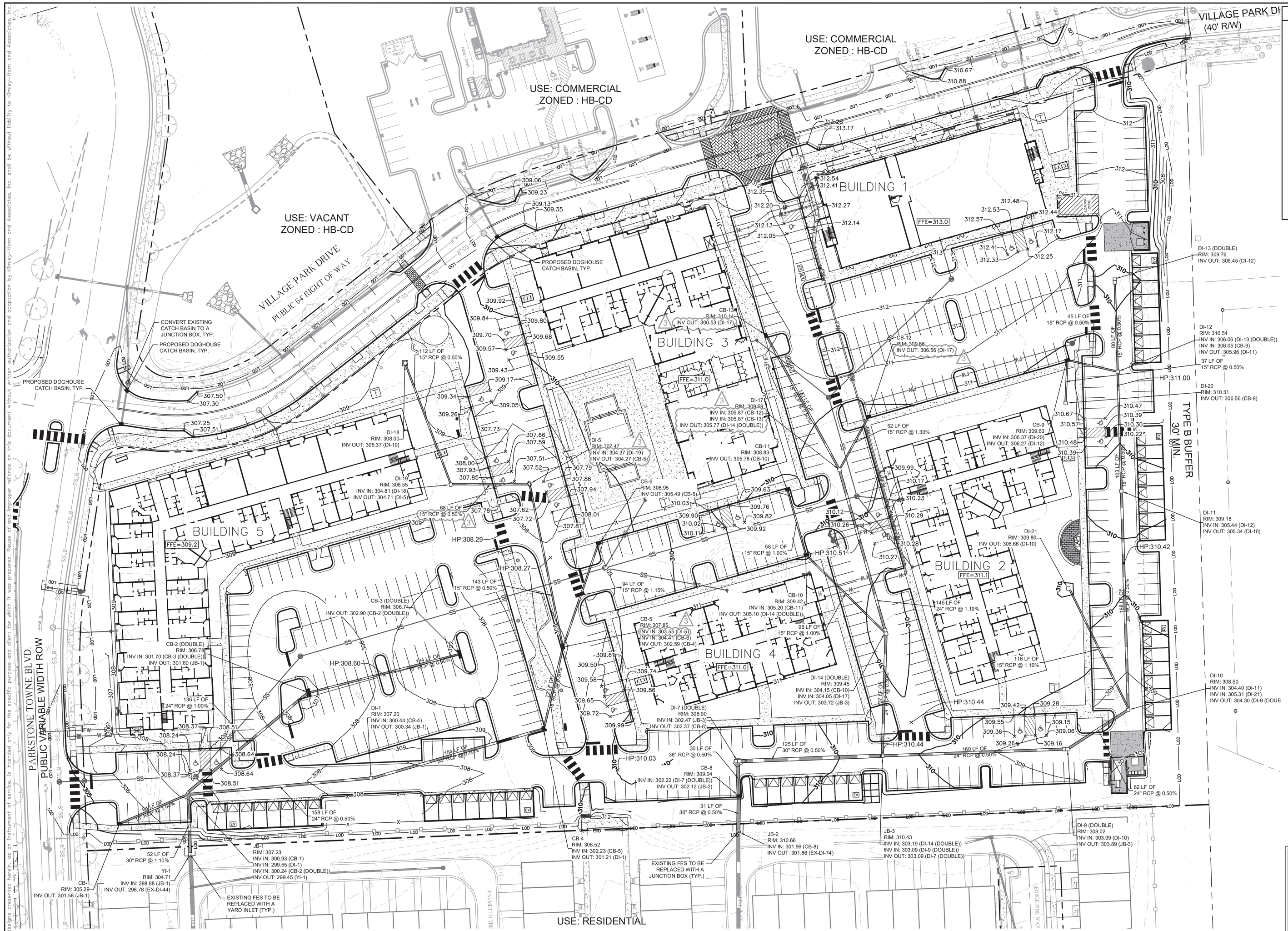

GRADING AND DRAINAGE LEGEND

- PROPERTY LINE
- TCE — TEMPORARY CONSTRUCTION EASEMENT
- STORM DRAIN (≥ 12 INCH)
- STORM DRAIN (< 12 INCH)
- LOD — LIMITS OF DISTURBANCE
- 805 — EXISTING CONTOUR
- 805 — PROPOSED CONTOUR
- 826.00 — SPOT ELEVATION (FLOW LINES)
- CATCH BASIN (CB)
- MANHOLE (SDMH)
- CLEANOUT (SDCO)
- DROP INLET (DI)
- AREA DRAIN (AD)
- CONTROL STRUCTURE (CS)
- FLARED END SECTION (FES)
- CONCRETE HEADWALL (HW)
- RIP-RAP APPLON

NORTH

GRAPHIC SCALE IN FEET
0 20 40 80

ALL CONSTRUCTION TO BE IN ACCORDANCE WITH ALL TOWN OF KNIGHTDALE AND/OR NCDOT STANDARDS AND SPECIFICATIONS.

EXISTING CONDITION NOTES:

1. EXISTING INFORMATION SHOWN FROM AN ALTA/ACSM LAND TITLE SURVEY PROVIDED BY CHANDLER LAND SURVEYING, INC., 83 ADAMS POINT DRIVE, GARNER, NC 27529, PHONE: 919-291-9163 AND DATED NOVEMBER 21, 2017 AND TAKEN FROM TOWN OF KNIGHTDALE APPROVED CONSTRUCTION PLANS FOR PARKSTONE AT KNIGHTDALE (KHA #017254001) DATED NOVEMBER 15, 2016, FROM TOWN OF KNIGHDALE APPROVED CONSTRUCTION PLANS FOR PARKSTONE VILLAGE (KHA #017254009) DATED NOVEMBER 8, 2019 AND PROVIDED BY KIMLEY-HORN AND ASSOCIATES, 421 FAYETTEVILLE STREET, SUITE 600, RALEIGH, NC 27601, PHONE: 919-677-2000, AND FROM A SANITARY SEWER ELEVATION SURVEY PROVIDED BY RWK, PA, 101 W. MAIN ST SUITE 202M GARNER, NC 27529, PHONE: 919-779-4854 AND DATED NOVEMBER 10, 2021.
2. THE SUBJECT PROPERTY IS NOT LOCATED WITHIN A SPECIAL FLOOD HAZARD AREA. IT IS LOCATED IN ZONE X BASED ON THE FLOOD INSURANCE RATE MAP COMMUNITY MAP NUMBER 3720174400K DATED JULY 19, 2022.

a. Town Certification. This design has been reviewed by the Engineer for the Town of Knightdale, and to the best of my knowledge and belief, it conforms to the requirements established in the Standard Specifications of the Town of Knightdale.

By: Samuel A. MacDonald Date: _____
Town Engineer

These plans are approved by the Town of Knightdale and serve as construction plans for this project.

By: Kevin Lewis Date: _____
Administrator

No.	REVISIONS	DATE	BY
4	REVISED PER TOK COMMENTS	04/19/24	MDB
3	REVISED PER TOK COMMENTS	02/27/24	MDB
2	REVISED PER TOK COMMENTS	01/12/24	DPM
1	REVISED PER TOK COMMENTS	9/12/23	ASA

Kimley»Horn
© 2023 KIMLEY-HORN AND ASSOCIATES, INC.
421 FAYETTEVILLE STREET, SUITE 600, RALEIGH, NC 27601
PHONE: 919-677-2000 FAX: 919-677-2050
WWW.KIMLEY-HORN.COM
#F-0102

NORTH CAROLINA PROFESSIONAL ENGINEER SEAL 032434 TIMOTHY R. CARTER 4/25/2024

KHA PROJECT 017254013
DATE 06/26/2023
SCALE AS SHOWN
DESIGNED BY KEJ
DRAWN BY KEJ
CHECKED BY COB

GRADING AND DRAINAGE PLAN

DEWITT KNIGHTDALE

PREPARED FOR
WIDEWATERS

TOWN OF KNIGHTDALE NORTH CAROLINA

SHEET NUMBER
C4.0

This document, together with the concepts and designs presented herein, as an instrument of service, is intended only for the specific purpose and client for which it was prepared. Reuse of and improper reliance on this document without written authorization and adaptation by Kimley-Horn and Associates, Inc. shall be without liability to Kimley-Horn and Associates, Inc.

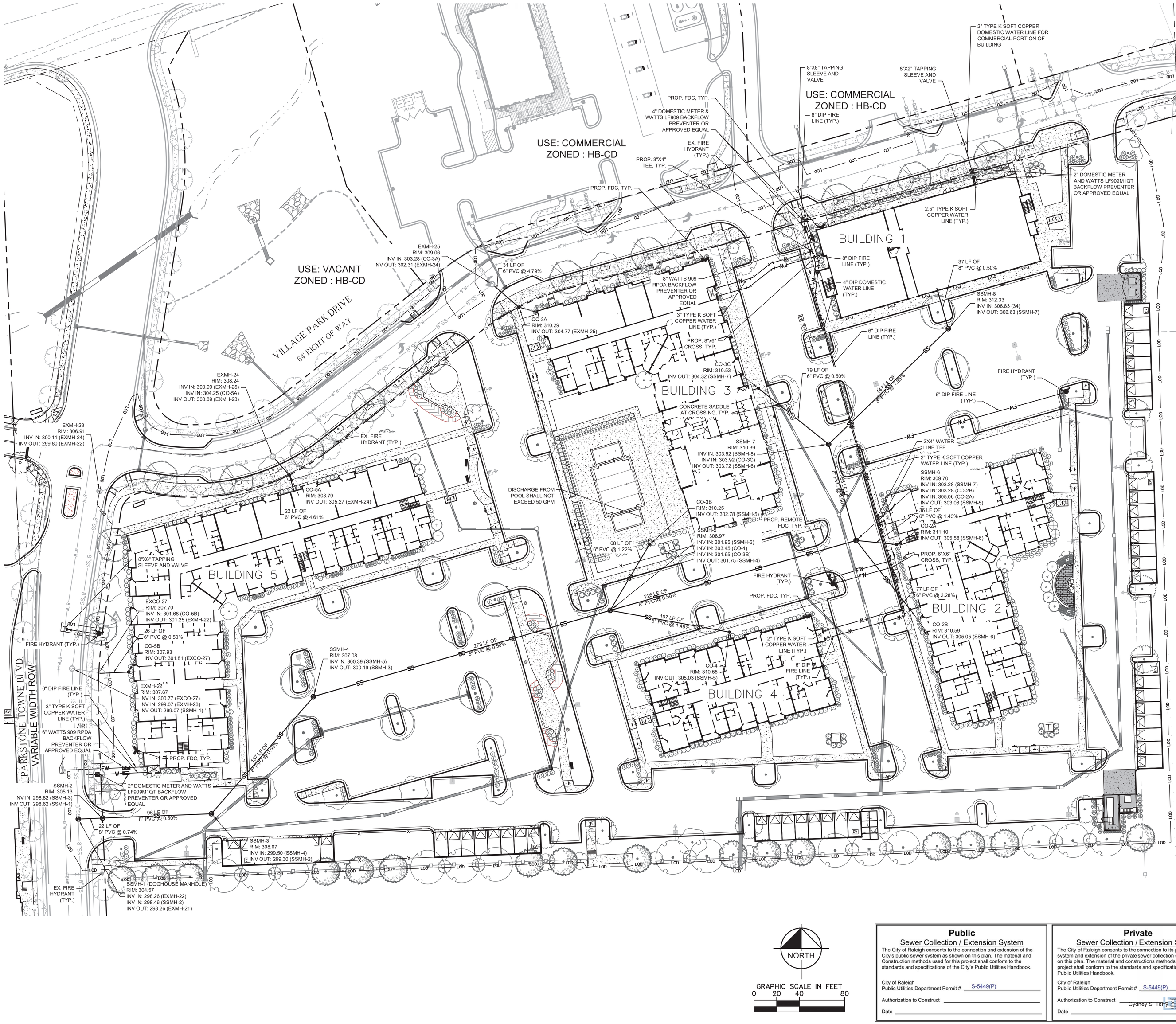

UTILITY LEGEND

- PROPERTY LINE
- W — WATER LINE
- SS — SANITARY SEWER LINE
- E — ELECTRIC
- FO — FIBER OPTIC
- G — GAS
- M — WATER METER
- GATE VALVE
- POINT OF CONNECTION
- BACKFLOW PREVENTOR
- PIPE TEE/BENDS
- FIRE HYDRANT (FH)
- FIRE DEPARTMENT CONNECTION (FDC)
- SANITARY SEWER CLEANOUT (SSCO)
- SS — SANITARY SEWER MANHOLE (SSMH)

STANDARD UTILITY NOTES:

1. All materials & construction methods shall be in accordance with City of Raleigh design standards, details & specifications (reference: CORPUD Handbook, current edition)
2. Utility separation requirements:
   a) A distance of 100' shall be maintained between sanitary sewer & any private or public water supply source such as an impounded reservoir used as a source of drinking water. If adequate lateral separation cannot be achieved, ferrous sanitary sewer pipe shall be specified & installed to waterline specifications. However, the minimum separation shall not be less than 25' from a private well or 50' from a public well
   b) When installing water &/or sewer mains, the horizontal separation between utilities shall be 10'. If this separation cannot be maintained due to existing conditions, the variation allowed is the water main in a separate trench with the elevation of the water main at least 18" above the top of the sewer & must be approved by the Public Utilities Director. All distances are measured from outside diameter to outside diameter
   c) Where it is impossible to obtain proper separation, or anytime a sanitary sewer passes over a watermain, DIP materials or steel encasement extended 10' on each side of crossing must be specified & installed to waterline specifications
   d) 5.0' minimum horizontal separation is required between all sanitary sewer & storm sewer facilities, unless DIP material is specified for sanitary sewer
   e) Maintain 18" min. vertical separation at all watermain & RCP storm drain crossings; maintain 18" min. vertical separation at all sanitary sewer & RCP storm drain crossings. Where adequate separations cannot be achieved, specify DIP materials & a concrete cradle having 6" min. clearance (per CORPUD details W-41 & S-49)
   f) All other underground utilities shall cross water & sewer facilities with 18" min. vertical separation required
3. Any necessary field revisions are subject to review & approval of an amended plan &/or profile by the City of Raleigh Public Utilities Department prior to construction
4. Developer shall provide 30 days advance written notice to owner for any work required within an existing City of Raleigh Utility Easement traversing private property
5. Contractor shall maintain continuous water & sewer service to existing residences & businesses throughout construction of project. Any necessary service interruptions shall be preceded by a 24 hour advance notice to the City of Raleigh Public Utilities Department
6. 3.0' minimum cover is required on all water mains & sewer forcemains. 4.0' minimum cover is required on all reuse mains
7. It is the developer's responsibility to abandon or remove existing water & sewer services not being used in redevelopment of a site unless otherwise directed by the City of Raleigh Public Utilities Department. This includes abandoning tap at main & removal of service from ROW or easement per CORPUD Handbook procedure
8. Install 2" PE water services with meters located at ROW or within a 2'x2' Waterline Easement, immediately adjacent. *NOTE: it is the applicant's responsibility to properly size the water service for each connection to provide adequate flow & pressure*
9. Install 4" PVC sewer services @ 1.0% minimum grade with cleanouts located at ROW or easement line & spaced every 75 linear feet maximum
10. Pressure reducing valves are required on all water services exceeding 80 psi; backwater valves are required on all sanitary sewer services having building drains lower than 1.0' above the next upstream manhole
11. All environmental permits applicable to the project must be obtained from NCDWQ, USACE &/or FEMA for any riparian buffer, wetland &/or floodplain impacts (respectively) prior to construction
12. NCDOT / Railroad Encroachment Agreements are required for any utility work (including main extensions & service taps) within state or railroad ROW prior to construction
13. Grease Interceptor / Oil Water Separator sizing calculations & installation specifications shall be approved by the RW FOG Program Coordinator prior to issuance of a UC / Bldg Permit. Contact (919) 996-4516 or fog@raleighnc.gov for more information
14. Cross-connection control protection devices are required based on degree of health hazard involved as listed in Appendix-B of the Rules Governing Public Water Systems in North Carolina. These guidelines are the minimum requirements. The devices shall meet American Society of Sanitary Engineering (ASSE) standards or be on the University of Southern California approval list. The devices shall be installed and tested (both initial and periodic testing thereafter) in accordance with the manufacturer's recommendations or the local cross-connection control program, whichever is more stringent. A Certificate of Compliance shall also be obtained from the RW Cross-Connection Coordinator for each device prior to issuance of a UC / Bldg Permit. Contact (919) 996-5923 or cross.connection@raleighnc.gov for more information

NOTE:
ALL FDC WILL BE WITHIN 50' OF A FIRE HYDRANT.

ALL CONSTRUCTION TO BE IN ACCORDANCE WITH ALL TOWN OF KNIGHTDALE AND/OR NCDOT STANDARDS AND SPECIFICATIONS.

EXISTING CONDITION NOTES:

1. EXISTING INFORMATION SHOWN FROM AN ALTA/ACSM LAND TITLE SURVEY PROVIDED BY CHANDLER LAND SURVEYING, INC., 83 ADAMS POINT DRIVE, GARNER, NC 27529, PHONE: 919-291-9163 AND DATED NOVEMBER 21, 2017 AND TAKEN FROM TOWN OF KNIGHTDALE APPROVED CONSTRUCTION PLANS FOR PARKSTONE AT KNIGHTDALE (KHA #017254001) DATED NOVEMBER 15, 2016, FROM TOWN OF KNIGHTDALE APPROVED CONSTRUCTION PLANS FOR PARKSTONE VILLAGE (KHA #017254009) DATED NOVEMBER 8, 2019 AND PROVIDED BY KIMLEY-HORN AND ASSOCIATES, 421 FAYETTEVILLE STREET, SUITE 600, RALEIGH, NC 27601, PHONE: 919-677-2000, AND FROM A SANITARY SEWER ELEVATION SURVEY PROVIDED BY RWK, PA, 101 W. MAIN ST SUITE 202M GARNER, NC 27529, PHONE: 919-779-4854 AND DATED NOVEMBER 10, 2021.
2. THE SUBJECT PROPERTY IS NOT LOCATED WITHIN A SPECIAL FLOOD HAZARD AREA. IT IS LOCATED IN ZONE X BASED ON THE FLOOD INSURANCE RATE MAP COMMUNITY MAP NUMBER 3720174400J DATED MAY 2, 2006.

NORTH

GRAPHIC SCALE IN FEET
0 20 40 80

Public
Sewer Collection / Extension System
The City of Raleigh consents to the connection and extension of the City's public sewer system as shown on this plan. The material and Construction methods used for this project shall conform to the standards and specifications of the City's Public Utilities Handbook.

City of Raleigh
Public Utilities Department Permit # S-5449(P)

Authorization to Construct _____

Date _____

Private
Sewer Collection / Extension System
The City of Raleigh consents to the connection to its public sewer system and extension of the private sewer collection system as shown on this plan. The material and constructions methods used for this project shall conform to the standards and specifications of the City's Public Utilities Handbook.

City of Raleigh
Public Utilities Department Permit # S-5449(P)

Authorization to Construct Cydney S. Terry

Date _____

a. Town Certification. This design has been reviewed by the Engineer for the Town of Knightdale, and to the best of my knowledge and belief, it conforms to the requirements established in the Standard Specifications of the Town of Knightdale.

By: Samuel A. MacDonald Date: _____
Town Engineer

These plans are approved by the Town of Knightdale and serve as construction plans for this project.

By: Kevin Lewis Date: _____
Administrator

No.	REVISIONS	DATE	BY
3	REVISED PER TOK COMMENTS	02/27/24	MDB
2	REVISED PER TOK COMMENTS	01/12/24	DPM
1	REVISED PER TOK COMMENTS	9/12/23	ASA

Kimley»Horn
421 FAYETTEVILLE STREET, SUITE 600, RALEIGH, NC 27601
PHONE: 919-677-2000 FAX: 919-677-2050
WWW.KIMLEY-HORN.COM
NC FIRM - 0102

NORTH CAROLINA PROFESSIONAL ENGINEER SEAL 032434 TIMOTHY R. CARTER
4/25/2024

KHA PROJECT	017254013
DATE	06/26/2023
SCALE	AS SHOWN
DESIGNED BY	KEJ
DRAWN BY	KEJ
CHECKED BY	COB

UTILITY PLAN

DEWITT KNIGHTDALE
PREPARED FOR
WIDEWATERS
TOWN OF KNIGHTDALE NORTH CAROLINA

SHEET NUMBER
C5.0

Posted By: Barnes, Mitchell Sheet Set: DeWitt Knightdale Layout: Layout1 March 08, 2024 09:45:52pm K:\RAL_LDE\017254013-DeWitt Knightdale\Planning Phase\15-CAD Files\PlanSheets\C5.0 UTILITY PLAN.dwg
This document, together with the concepts and designs presented herein, as an instrument of service, is intended only for the specific purpose and client for which it was prepared. Reuse of and improper reliance on this document without written authorization and adaptation by Kimley-Horn and Associates, Inc. shall be without liability to Kimley-Horn and Associates, Inc.

ALL CONSTRUCTION TO BE IN ACCORDANCE WITH ALL TOWN OF KNIGHTDALE AND/OR NCDOT STANDARDS AND SPECIFICATIONS.

EXISTING CONDITION NOTES:

1. EXISTING INFORMATION SHOWN FROM AN ALTA/ACSM LAND TITLE SURVEY PROVIDED BY CHANDLER LAND SURVEYING, INC., 83 ADAMS POINT DRIVE, GARNER, NC 27529, PHONE: 919-291-9163 AND DATED NOVEMBER 21, 2017 AND TAKEN FROM TOWN OF KNIGHTDALE APPROVED CONSTRUCTION PLANS FOR PARKSTONE AT KNIGHTDALE (KHA #017254001) DATED NOVEMBER 15, 2016, FROM TOWN OF KNIGHTDALE APPROVED CONSTRUCTION PLANS FOR PARKSTONE VILLAGE (KHA #017254009) DATED NOVEMBER 8, 2019 AND PROVIDED BY KIMLEY-HORN AND ASSOCIATES, 421 FAYETTEVILLE STREET, SUITE 600, RALEIGH, NC 27601, PHONE: 919-677-2000, AND FROM A SANITARY SEWER ELEVATION SURVEY PROVIDED BY RWK, PA, 101 W. MAIN ST SUITE 202M GARNER, NC 27529, PHONE: 919-779-4854 AND DATED NOVEMBER 10, 2021.
2. THE SUBJECT PROPERTY IS NOT LOCATED WITHIN A SPECIAL FLOOD HAZARD AREA. IT IS LOCATED IN ZONE X BASED ON THE FLOOD INSURANCE RATE MAP COMMUNITY MAP NUMBER 3720174400J DATED MAY 2, 2006.

a. **Town Certification.** This design has been reviewed by the Engineer for the Town of Knightdale, and to the best of my knowledge and belief, it conforms to the requirements established in the Standard Specifications of the Town of Knightdale.

By: Samuel A. MacDonald Date: _____
Town Engineer

These plans are approved by the Town of Knightdale and serve as construction plans for this project.

By: Kevin Lewis Date: _____
Administrator

Public
Sewer Collection / Extension System

The City of Raleigh consents to the connection and extension of the City's public sewer system as shown on this plan. The material and Construction methods used for this project shall conform to the standards and specifications of the City's Public Utilities Handbook.

City of Raleigh
Public Utilities Department Permit # S-5449(P)

Authorization to Construct _____

Date _____

Private
Sewer Collection / Extension System

The City of Raleigh consents to the connection to its public sewer system and extension of the private sewer collection system as shown on this plan. The material and constructions methods used for this project shall conform to the standards and specifications of the City's Public Utilities Handbook.

City of Raleigh
Public Utilities Department Permit # S-5449(P)

Authorization to Construct _____
Cydney S. Terry

Date _____

No.	REVISIONS	DATE	BY
3	REWSED PER TOK COMMENTS	02/27/24	MDB
2	REWSED PER TOK COMMENTS	01/12/24	DPM
1	REVISED PER TOK COMMENTS	9/12/23	ASA

Kimley»Horn
421 FAYETTEVILLE STREET, SUITE 600, RALEIGH, NC 27601
PHONE: 919-677-2000 FAX: 919-677-2050
WWW.KIMLEY-HORN.COM
#F-0102

NORTH CAROLINA PROFESSIONAL ENGINEER SEAL 052434 TIMOTHY R. CARTER
4/25/2024

KHA PROJECT 017254013
DATE 06/26/2023
SCALE AS SHOWN
DESIGNED BY KEJ
DRAWN BY KEJ
CHECKED BY COB

UTILITY PLAN & PROFILE

DEWITT KNIGHTDALE
PREPARED FOR
WIDEWATERS
TOWN OF KNIGHTDALE NORTH CAROLINA

SHEET NUMBER
C5.1

Plotted By: Barnes, Michael Sheet Set: DeWitt Knightdale Layout: C5.1 March 08, 2024 11:36:48am K:\RAL_LDE\017254013_DeWitt Knightdale\Planning Phase\15-CAD Files\References\xuTIL_017254013.dwg
This document, together with the concepts and designs presented herein, as an instrument of service, is intended only for the specific purpose and client for which it was prepared. Reuse of and improper reliance on this document without written authorization and adaptation by Kimley-Horn and Associates, Inc. shall be without liability to Kimley-Horn and Associates, Inc.

Plotted By: Barnes, Michael Sheet Set: DeWitt Knightdale Layout: C6.0 SITE DETAILS January 26, 2024 11:51:27am K:\RAL_LDEV\017254013_DeWitt Knightdale\Planning Phase\VS_CAD Files\PlanSheets\C6.0 SITE DETAILS.dwg
This document, together with the concepts and designs presented herein, as an instrument of service, is intended only for the specific purpose and client for which it was prepared. Reuse of and improper reliance on this document without written authorization and adaptation by Kimley-Horn and Associates, Inc. shall be without liability to Kimley-Horn and Associates, Inc.

PLANNING & URBAN DESIGN DESIGN STANDARDS

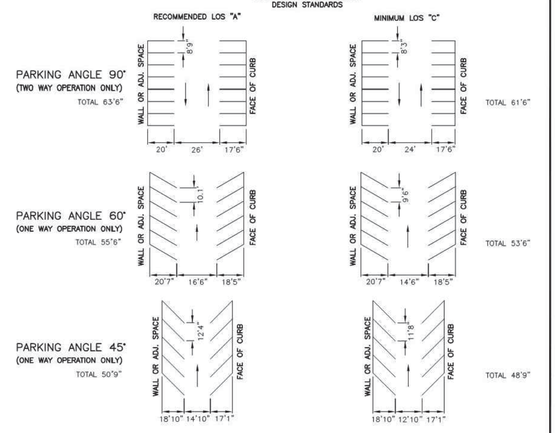

NOTE:

1. FOR ACCESSIBLE PARKING STANDARDS SEE TOWN UNIFIED DEVELOPMENT ORDINANCE.
2. PAVEMENT MARKINGS SHALL BE 4" WHITE PAINT TO TOWN STANDARDS.

REVISIONS	
DATE	DESCRIPTION

TOWN OF KNIGHTDALE STANDARD DETAILS | PARKING STANDARDS | STD. NO. 3.20

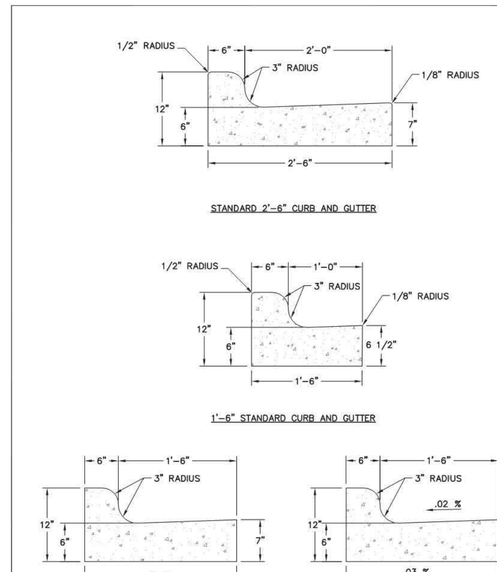

REVISIONS	
DATE	DESCRIPTION

TOWN OF KNIGHTDALE STANDARD DETAILS | CURB AND GUTTER | STD. NO. 4.01 | 1 of 3

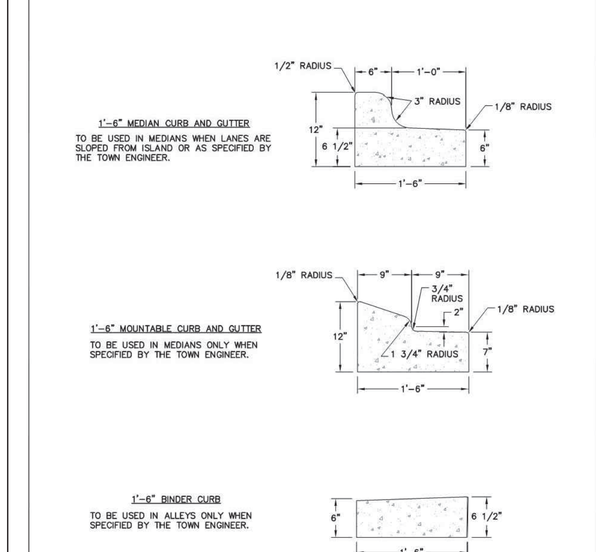

REVISIONS	
DATE	DESCRIPTION

TOWN OF KNIGHTDALE STANDARD DETAILS | CURB AND GUTTER | STD. NO. 4.01 | 2 of 3

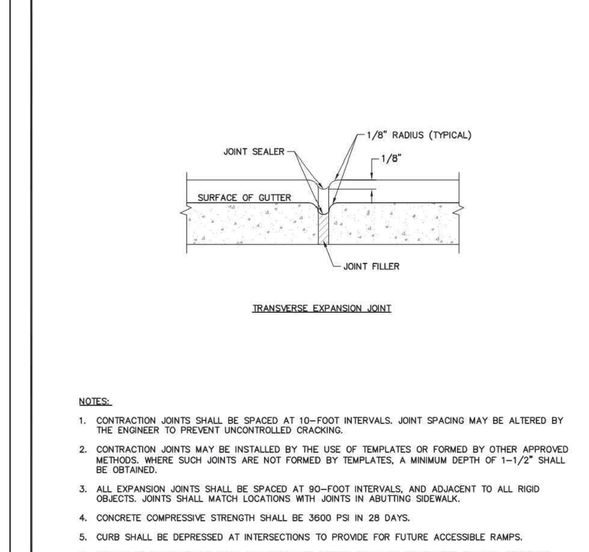

NOTES:

1. CONTRACTION JOINTS SHALL BE SPACED AT 10-FOOT INTERVALS. JOINT SPACING MAY BE ALTERED BY THE ENGINEER TO PREVENT UNCONTROLLED CRACKING.
2. CONTRACTION JOINTS MAY BE INSTALLED BY THE USE OF TEMPLATES OR FORMED BY OTHER APPROVED METHODS. WHERE SUCH JOINTS ARE NOT FORMED BY TEMPLATES, A MINIMUM DEPTH OF 1-1/2" SHALL BE OBTAINED.
3. ALL EXPANSION JOINTS SHALL BE SPACED AT 90-FOOT INTERVALS, AND ADJACENT TO ALL RIGID OBJECTS. JOINTS SHALL MATCH LOCATIONS WITH JOINTS IN ABUTTING SIDEWALK.
4. CONCRETE COMPRESSIVE STRENGTH SHALL BE 3600 PSI IN 28 DAYS.
5. CURB SHALL BE DEPRESSED AT INTERSECTIONS TO PROVIDE FOR FUTURE ACCESSIBLE RAMPS.
6. TOP 6" OF SUBGRADE BENEATH THE CURB AND GUTTER SHALL BE COMPACTED TO 100% STANDARD PROCTOR DENSITY.

REVISIONS	
DATE	DESCRIPTION

TOWN OF KNIGHTDALE STANDARD DETAILS | CURB AND GUTTER | STD. NO. 4.01 | 3 of 3

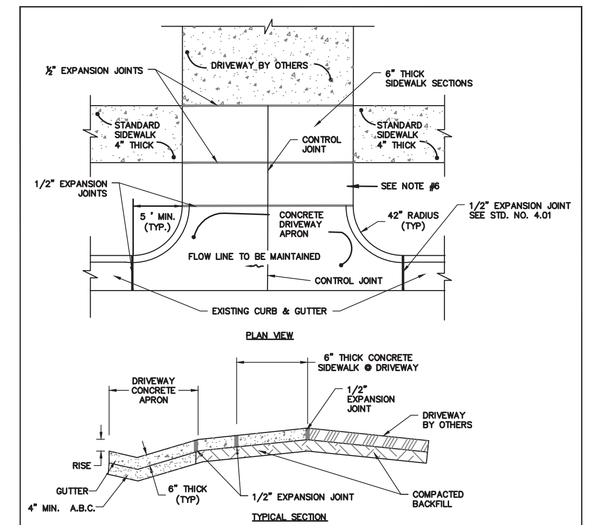

NOTES:

1. RESIDENTIAL DRIVEWAYS TO BE 12' TO 18'.
2. COMMERCIAL DRIVEWAYS TO BE A MAXIMUM OF 36' WIDE.
3. CONCRETE SHALL BE 3000 P.S.I.
4. CONTROL JOINTS NOT TO EXCEED 10' ON CENTER.
5. CURB RADIUS SHALL NOT RISE MORE THAN 1 (ONE) INCH.
6. IF THE DRIVEWAY SECTION BETWEEN THE SIDEWALK AND THE DRIVEWAY APRON IS 18' OR LESS THE SIDEWALK WILL BE WIDENED TO THE APRON AND AN EXPANSION JOINT ELIMINATED.
7. DRIVEWAY SHALL BE A MINIMUM OF 3.5 FEET FROM PROPERTY LINE.

REVISIONS	
DATE	DESCRIPTION

TOWN OF KNIGHTDALE STANDARD DETAILS | STANDARD DRIVEWAY APRON | STD. NO. 4.03

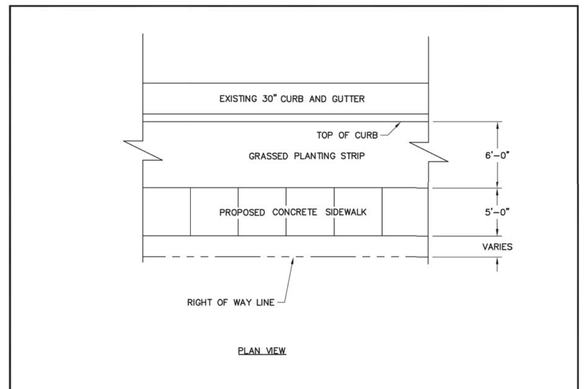

NOTES:

1. TRANSVERSE EXPANSION JOINTS TO BE A MAXIMUM OF 50 FEET APART.
2. CONTROL JOINTS TO BE AT 5 FEET O.C.
3. ALL CONCRETE TO BE FINISHED WITH CURING COMPOUND.
4. SIDEWALK SUB BASE TO BE A MIXTURE OF 70 PERCENT #57 STONE AND ASTM C33 SAND OR EQUAL.

REVISIONS	
DATE	DESCRIPTION

TOWN OF KNIGHTDALE STANDARD DETAILS | CONCRETE SIDEWALKS | STD. NO. 4.04 | 1 of 2

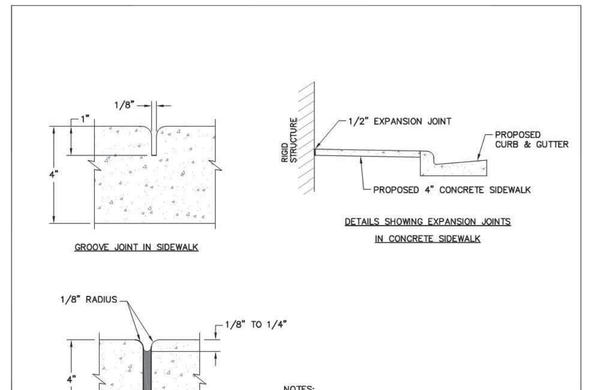

NOTES:

1. A GROOVE JOINT 1" DEEP WITH 1/8" RADII SHALL BE REQUIRED IN THE CONCRETE SIDEWALK AT 5' INTERVALS. ONE 1/2" EXPANSION JOINT WILL BE REQUIRED AT 45' INTERVALS NOT TO EXCEED 50' AND MATCHING EXPANSION/CONSTRUCTION JOINT IN ADJACENT CURB. A SEALED 1/2" EXPANSION JOINT WILL BE REQUIRED WHERE THE SIDEWALK JOINS ANY RIGID STRUCTURE.
2. SIDEWALK AT DRIVEWAY ENTRANCES TO BE 6" THICK.
3. WIDTH OF SIDEWALK ON THOROUGHFARE STREETS SHALL BE A MINIMUM OF 5'. WIDTH OF SIDEWALKS IN THE CENTRAL BUSINESS DISTRICT WILL BE DETERMINED BY THE TOWN ENGINEER.
4. WIDTH OF SIDEWALKS ON NON-THOROUGHFARE STREETS SHALL BE A MINIMUM OF 5' UNLESS OTHERWISE SPECIFIED BY THE TOWN'S UNIFIED DEVELOPMENT ORDINANCE.
5. SIDEWALK TO BE POURED TO END OF RADIUS AT INTERSECTING STREETS.
6. CONCRETE COMPRESSIVE STRENGTH SHALL BE 3600 PSI IN 28 DAYS.

REVISIONS	
DATE	DESCRIPTION

TOWN OF KNIGHTDALE STANDARD DETAILS | CONCRETE SIDEWALKS | STD. NO. 4.04 | 2 of 2

PUBLIC ART
N.T.S.
KHA DETAIL NO: 02.305.R02 (01)

NOTE:

1. OWNER WILL PROVIDE PUBLIC ART SIMILAR TO THAT OF STATESVILLE SCULPTURE GARDEN

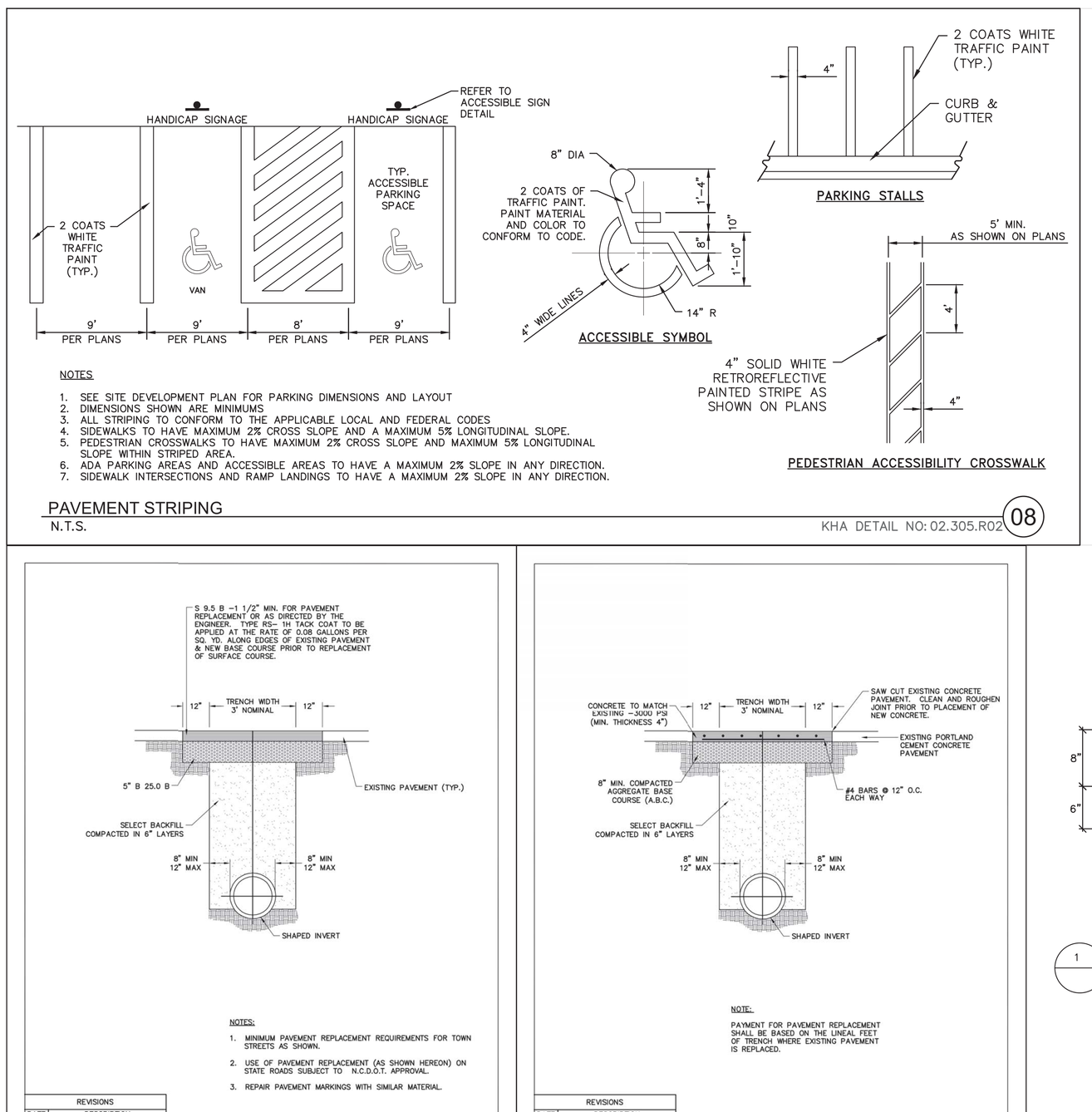

NOTES

1. SEE SITE DEVELOPMENT PLAN FOR PARKING DIMENSIONS AND LAYOUT
2. DIMENSIONS SHOWN ARE MINIMUMS
3. ALL STRIPING TO CONFORM TO THE APPLICABLE LOCAL AND FEDERAL CODES
4. SIDEWALKS TO HAVE MAXIMUM 2% CROSS SLOPE AND A MAXIMUM 5% LONGITUDINAL SLOPE.
5. PEDESTRIAN CROSSWALKS TO HAVE MAXIMUM 2% CROSS SLOPE AND MAXIMUM 5% LONGITUDINAL SLOPE WITHIN STRIPED AREA.
6. ADA PARKING AREAS AND ACCESSIBLE AREAS TO HAVE A MAXIMUM 2% SLOPE IN ANY DIRECTION.
7. SIDEWALK INTERSECTIONS AND RAMP LANDINGS TO HAVE A MAXIMUM 2% SLOPE IN ANY DIRECTION.

PAVEMENT STRIPING
N.T.S.
KHA DETAIL NO: 02.305.R02 (08)

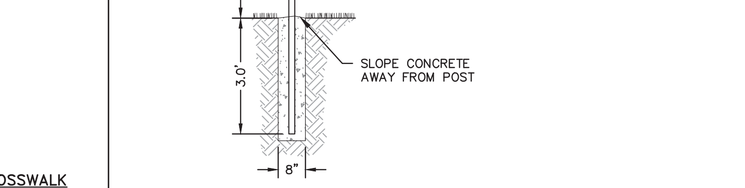

NOTES

1. THE CONTRACTOR SHALL BE RESPONSIBLE FOR DETERMINING THE EXACT LOCATION OF ALL UTILITIES, WHETHER SHOWN OR NOT SHOWN HEREON, AND SHALL REPAIR AT HIS EXPENSE, ANY DAMAGE WHICH MAY OCCUR TO SAID UTILITIES

STOP SIGN
N.T.S.
KHA DETAIL NO: 02.301.R01 (09)

NOTES:

1. MINIMUM PAVEMENT REPLACEMENT REQUIREMENTS FOR TOWN STREETS AS SHOWN.
2. USE OF PAVEMENT REPLACEMENT (AS SHOWN HEREON) ON STATE ROADS SUBJECT TO N.C.D.O.T. APPROVAL.
3. REPAIR PAVEMENT MARKINGS WITH SIMILAR MATERIAL.

REVISIONS	
DATE	DESCRIPTION

TOWN OF KNIGHTDALE STANDARD DETAILS | ASPHALT PAVEMENT REPAIR SECTION | STD. NO. 3.14

NOTE:

PAYMENT FOR PAVEMENT REPLACEMENT SHALL BE BASED ON THE LINEAL FEET OF TRENCH WHERE EXISTING PAVEMENT IS REPLACED.

REVISIONS	
DATE	DESCRIPTION

TOWN OF KNIGHTDALE STANDARD DETAILS | CONCRETE PAVEMENT REPAIR SECTION | STD. NO. 3.15

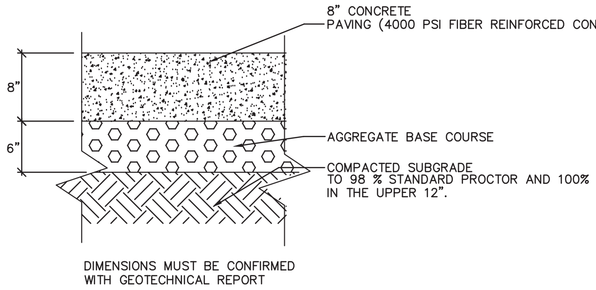

1 HEAVY DUTY CONCRETE PAVING DETAIL
NOT TO SCALE

a. **Town Certification.** This design has been reviewed by the Engineer for the Town of Knightdale, and to the best of my knowledge and belief, it conforms to the requirements established in the Standard Specifications of the Town of Knightdale.

By: Samuel A. MacDonald Date: _____
Town Engineer

These plans are approved by the Town of Knightdale and serve as construction plans for this project.

By: Kevin Lewis Date: _____
Administrator

No.	REVISIONS	DATE	BY
2	REVISED PER TOK COMMENTS	01/12/24	DPM
1	REVISED PER TOK COMMENTS	9/12/23	ASA

Kimley»Horn
© 2023 KIMLEY-HORN AND ASSOCIATES, INC.
421 FAYETTEVILLE STREET, SUITE 600, RALEIGH, NC 27601
PHONE: 919-677-2000 FAX: 919-677-2050
WWW.KIMLEY-HORN.COM
#F-0102

NORTH CAROLINA PROFESSIONAL ENGINEER SEAL 052434 TIMOTHY R. CARTER 1/25/2024

KHA PROJECT 017254013
DATE 06/26/2023
SCALE AS SHOWN
DESIGNED BY KEJ
DRAWN BY KEJ
CHECKED BY COB

SITE DETAILS

DEWITT KNIGHTDALE
PREPARED FOR
WIDEWATERS
TOWN OF KNIGHTDALE
NORTH CAROLINA

SHEET NUMBER
C6.0

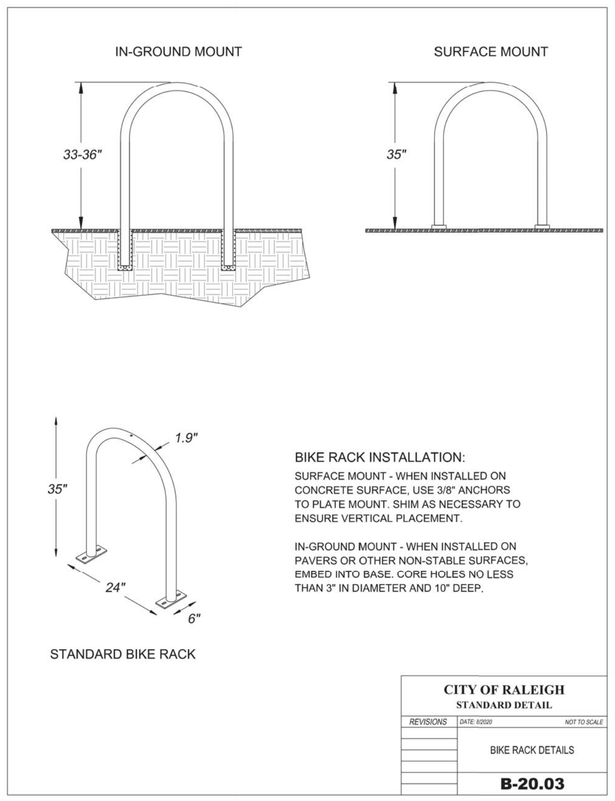

STANDARD BIKE RACK

CITY OF RALEIGH
STANDARD DETAIL

REVISIONS	DATE: 6/2020	NOT TO SCALE
	BIKE RACK DETAILS	

B-20.03

INSTALLATION OF STREET NAME SIGN

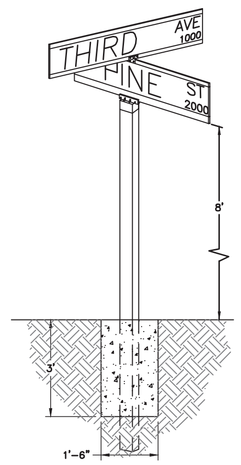

NOTES:

1. TWO STREET NAME MARKERS ARE REQUIRED IF THE MAJOR STREET HAS 3 OR MORE LANES.
2. ANY VARIANCE FROM THIS STANDARD MUST BE APPROVED BY THE TOWN OF KNIGHTDALE.

INTERSECTION WITH SIDEWALK, CURB, AND GUTTER

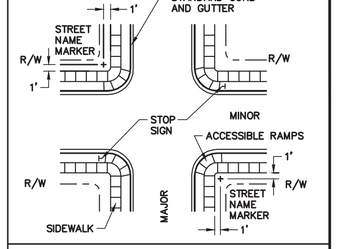

INTERSECTION WITH DITCHES, AND NO CURB AND GUTTER

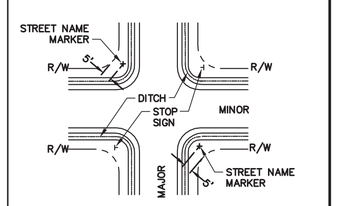

INTERSECTION WITH CURB AND GUTTER

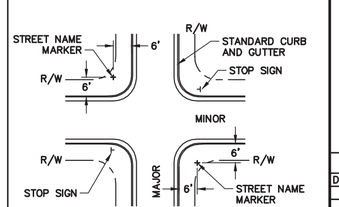

REVISIONS	
DATE	DESCRIPTION

TOWN OF KNIGHTDALE STANDARD DETAILS | STREET NAME SIGN INSTALLATION LOCATIONS | STD. NO. 3.16

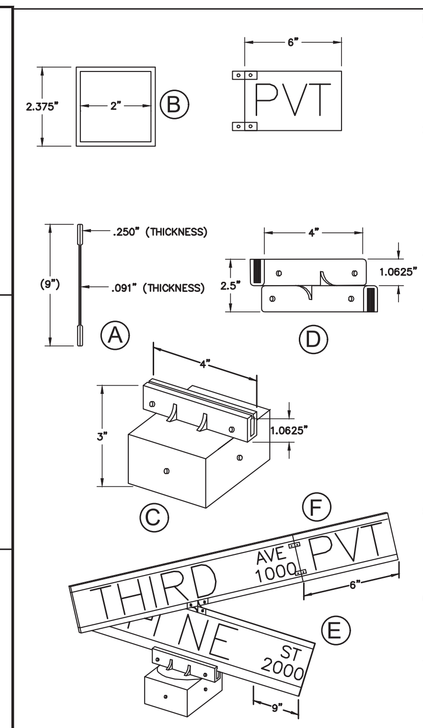

NOTES:

1. BLADES SHALL BE EXTRUDED ALUMINUM 6063T5 OR 6063T6 ALLOY .080" THICK. POST SHALL BE 10'-0" IN LENGTH, GLOSS GALVANIZED STEEL CONTINUOUS MILL DIPPED, WITH NO RAW ENDS; OR 40, 1540 WALL ALUMINUM (SEE DETAIL B).
2. CAP TO BE ALUMINUM #380 ALLOY OR EQUAL SLOTTED FOR .25" EXTRUDED BLADE; 2.375" I.D. BASE, DIE CAST AND POLISHED. CAP SHALL BE TAPPED TO RECEIVE AND INCLUDE 3 STAINLESS STEEL SET SCREWS FOR POST MOUNTING AND 2 STAINLESS STEEL SET SCREWS FOR BLADE MOUNTING. SET SCREWS TO HAVE ALLEN HEADS (SEE DETAIL C).
3. BLADE SPACER BRACKET SHALL MEET SAME SPECIFICATIONS AS THE CAP WITH 2 SCREWS TO EACH BLADE MOUNTING (SEE DETAIL D).
4. THE FACE OF ALL BLADES SHALL MEET COVERED WITH ENGINEERING GRADE SHEETING WITH #2290 WHITE DIE CUT LETTERS WITH REVERSED SCREENED #708 TRANSPARENT GREEN. THE PRIMARY LETTERS SHALL BE 5" HIGH UPPER CASE, FHWA SERIES B AND PREFIX/SUFFIX LETTERS SHALL BE 2-1/2" HIGH, UPPER CASE, FHWA SERIES C. BLOCK NUMBERS SHALL BE PLACED IN THE LOWER RIGHT CORNER AND SHALL BE 2-1/2" HIGH, FHWA SERIES C. ALL MATERIALS TO BE VACUUM AND HEAT APPLIED TO A PREPARED ALUMINUM BLADE, WHICH HAS BEEN CLEANED AND ALL FOREIGN MATERIAL REMOVED (SEE DETAIL E).
5. LETTERS, NUMBERS AND SPACING SHALL CONFORM TO THE STANDARD ALPHABETS FOR HIGHWAY SIGNS, 1966 EDITION, REPRINT MAY, 1972 BY THE U.S. DEPARTMENT OF TRANSPORTATION, FEDERAL HIGHWAY ADMINISTRATION, OFFICE OF TRAFFIC OPERATION.
6. ALL STREET NAME SIGNS ARE SUBJECT TO APPROVAL BY THE TOWN. BLOCK NUMBERS SHALL BE PROVIDED ON SIGNS AND CORRESPOND TO OFFICIALLY APPROVED ADDRESSES.
7. IF THE STREET IS INTENDED TO BE PRIVATE, A SUPPLEMENTAL PLATE IS REQUIRED. THE SUPPLEMENTAL PLATE MAY BE ATTACHED TO THE SIGN OR AN EXTENDED BLADE WITH BLACK ON YELLOW SHEETING MAY BE USED. THE SIGN SHALL HAVE BLACK LETTERS THAT SHOW PVT TO STAND FOR PRIVATE. THE LETTERS SHALL BE 2-1/2" HIGH, UPPER CASE, FHWA SERIES C, ON A BACKGROUND OF YELLOW ENGINEERING GRADE SHEETING. (SEE DETAIL F).

REVISIONS	
DATE	DESCRIPTION

TOWN OF KNIGHTDALE STANDARD DETAILS | STREET NAME SIGN | STD. NO. 3.17

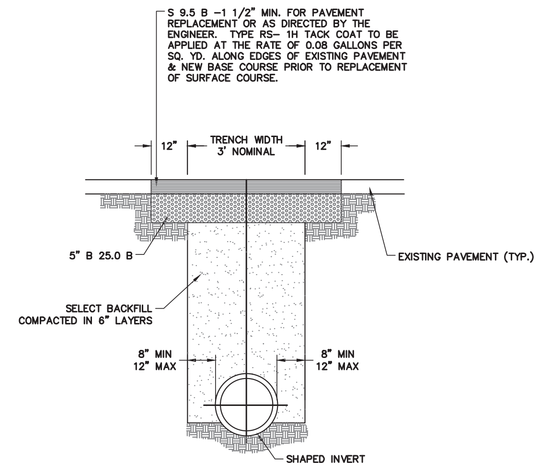

NOTES:

1. MINIMUM PAVEMENT REPLACEMENT REQUIREMENTS FOR TOWN STREETS AS SHOWN.
2. USE OF PAVEMENT REPLACEMENT (AS SHOWN HEREON) ON STATE ROADS SUBJECT TO N.C.D.O.T. APPROVAL.
3. REPAIR PAVEMENT MARKINGS WITH SIMILAR MATERIAL.

REVISIONS	
DATE	DESCRIPTION

TOWN OF KNIGHTDALE STANDARD DETAILS | ASPHALT PAVEMENT REPAIR SECTION | STD. NO. 3.14

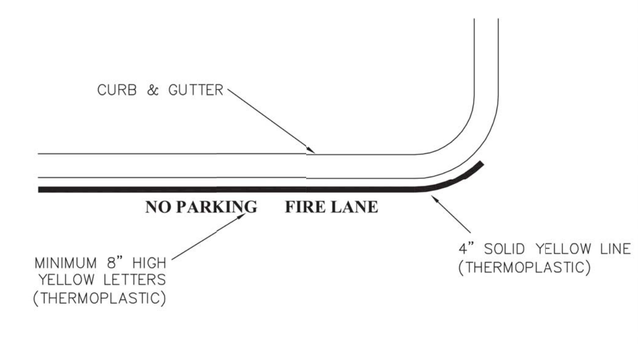

TYPICAL FIRE LANE PAVEMENT MARKING DETAIL

REVISIONS	
DATE	DESCRIPTION

TOWN OF KNIGHTDALE STANDARD DETAILS | FIRE LANE PAVEMENT MARKING | STD. NO. 3.31

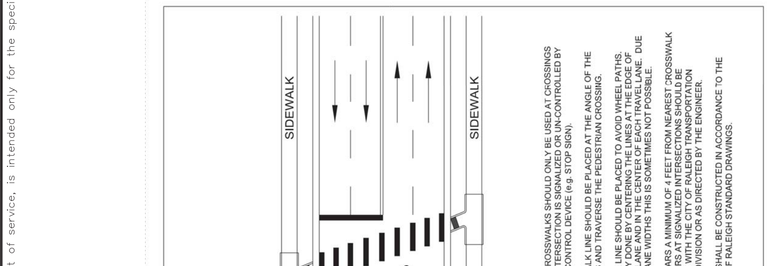

PARTIAL LONGITUDINAL SECTIONS OF PAVED ISLANDS

NOTE:
WHEN MONOLITHIC CONCRETE ISLAND IS ON TOP OF SURFACE COURSE, DRIVE 40d SPIKES INTO SURFACE UNDER MONOLITHIC CONCRETE ISLAND. STAGGER SPIKES ON 2' CENTERS EACH WAY.

IN THE CONCRETE PAVEMENT (ISLAND) AND CONCRETE ISLAND (MONOLITHIC) PLACE ½" EXPANSION JOINTS AT 30' INTERVALS AND GROOVED JOINTS 1" DEEP AT 10' INTERVALS BETWEEN EXPANSION JOINTS.

LINE UP THE JOINTS IN THE CONCRETE PAVEMENT (ISLAND) WITH THE JOINTS IN THE CURB OR CURB AND GUTTER. FILL AND SEAL THE TOP ½" OF THE EXPANSION JOINTS AND THE ENTIRE DEPTH OF GROOVED JOINTS WITH JOINT SEALER.

FOR JOINTS IN THE CURB AND/OR CURB AND GUTTER, SEE STANDARD NO. 846.01

5" MONOLITHIC CONCRETE ISLAND (SURFACE MOUNTED) ON ASPHALT CONCRETE PAVEMENT
(USE ON ISLAND 4' WIDE OR GREATER)

SEE TYPICAL SECTIONS FOR PAVEMENT DEPTH; KEY IN ON THE LAST LAYER OF PAVEMENT SURFACE COURSE

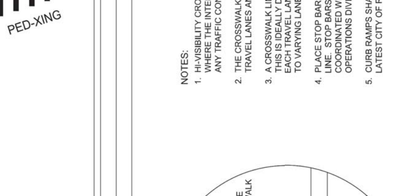

5" MONOLITHIC CONCRETE ISLAND (KEYED IN) ON ASPHALT CONCRETE PAVEMENT
(USE ON ISLAND LESS THAN 4' WIDE)

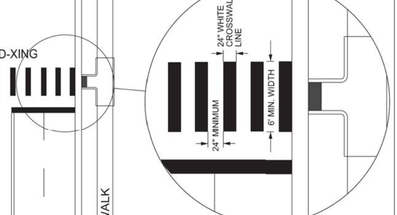

5" MONOLITHIC CONCRETE ISLAND (SURFACE MOUNTED) ON CONCRETE PAVEMENT

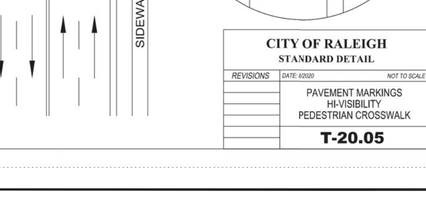

PAVED CONCRETE ISLAND

STATE OF NORTH CAROLINA DEPARTMENT OF TRANSPORTATION DIVISION OF HIGHWAYS RALEIGH, N.C.

1-18

ROADWAY STANDARD DRAWING FOR

CONCRETE ISLANDS

SHEET 1 OF 1

852.01

CITY OF RALEIGH
STANDARD DETAIL

REVISIONS	DATE: 6/2020	NOT TO SCALE
DATE: 10/2022	CURB RAMPS (NEW DEVELOPMENT)	

T-20.01.2

SHEET 3 OF 9

CITY OF RALEIGH
STANDARD DETAIL

REVISIONS	DATE: 6/2020	NOT TO SCALE
	CURB RAMPS (NEW DEVELOPMENT)	

T-20.01.3

SHEET 3 OF 9

CITY OF RALEIGH
STANDARD DETAIL

REVISIONS	DATE: 6/2020	NOT TO SCALE
	CURB RAMPS (NEW DEVELOPMENT)	

T-20.01.4

SHEET 4 OF 9

NOTES:
1. ASSEMBLY CROSSWALKS SHOULD ONLY BE USED AT CROSSINGS WHERE THE INTERSECTION IS SIGNALIZED OR UN-CONTROLLED BY PAY TRAFFIC CONTROL DEVICES (E.G. STOP SIGNS).
2. CROSSWALKS SHOULD BE PERPENDICULAR TO THE ANGLE OF THE TRAVEL LANES AND TRAVERSE THE PEDESTRIAN CROSSING.
3. A CROSSWALK LINE SHOULD BE PLACED TO AVOID WHEEL PATHS. GENERALLY, THIS WILL REQUIRE PLACEMENT OF LINES NEAR EACH TRAVEL LANE AND IN THE CENTER OF EACH TRAVEL LANE. DUE TO SNOW PLOWS, DO NOT PLACE MARKINGS IN GUTTERS.
4. PLACE STOP BARS A MINIMUM OF 4 FEET FROM NEAREST CROSSWALK LINE. STOP BARS AT SIGNALIZED INTERSECTIONS SHOULD BE PLACED TO PROVIDE THE BEST VISIBILITY FOR VEHICULAR OPERATIONS DIVISION OR AS DIRECTED BY THE ENGINEER.
5. CURB RAMPS SHALL BE CONSTRUCTED IN ACCORDANCE TO THE LATEST CITY OF RALEIGH STANDARD DRAWINGS.

CITY OF RALEIGH
STANDARD DETAIL

REVISIONS	DATE: 6/2020	NOT TO SCALE
	PAVEMENT MARKINGS HI-VISIBILITY PEDESTRIAN CROSSWALK	

T-20.05

NOTES

1. ALL PAVEMENT MATERIALS SHALL BE IN ACCORDANCE WITH THE NORTH CAROLINA DEPARTMENT OF TRANSPORTATION (NCDOT) STANDARD SPECIFICATIONS.
2. PAVEMENT SECTION MUST MEET THE CRITERIA GIVEN IN THE SITE SOIL REPORT.

ASPHALT PAVEMENT SECTIONS
N.T.S

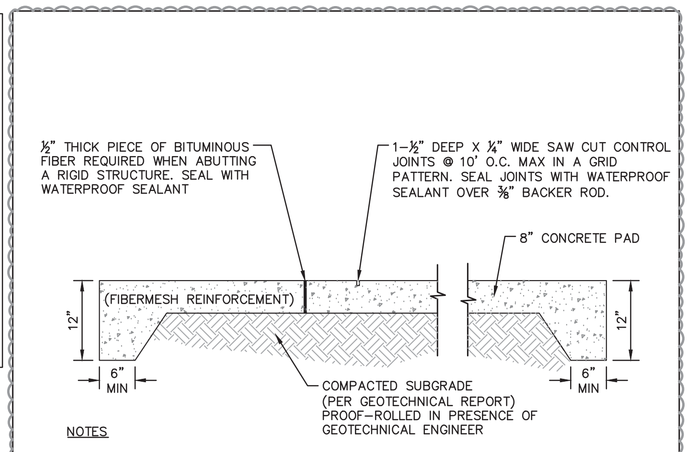

NOTES

1. EXPANSION JOINTS AT BUILDINGS OR IMMOVABLE OBJECTS.
2. CONTROL JOINTS 12' O.C.
3. EXPANSION JOINTS 30' O.C. (MAX)
4. CONTROL JOINT SPACING MAY VARY.
5. BROOM FINISH

CONCRETE APRON AND DUMPSTER PAD
N.T.S. KHA DETAIL NO: 02.107.R01 (XX)

a. Town Certification. This design has been reviewed by the Engineer for the Town of Knightdale, and to the best of my knowledge and belief, it conforms to the requirements established in the Standard Specifications of the Town of Knightdale.

By: Samuel A. MacDonald Date: _____
Town Engineer

These plans are approved by the Town of Knightdale and serve as construction plans for this project.

By: Kevin Lewis Date: _____
Administrator

No.	REVISIONS	DATE	BY
2	REVISED PER TOK COMMENTS	01/12/24	DPM
1	REVISED PER TOK COMMENTS	9/12/23	ASA

Kimley»Horn
421 FAYETTEVILLE STREET, SUITE 600, RALEIGH, NC 27601
PHONE: 919-677-2000 FAX: 919-677-2050
WWW.KIMLEY-HORN.COM
NC FIRM #F-0102

© 2023 KIMLEY-HORN AND ASSOCIATES, INC.

NORTH CAROLINA PROFESSIONAL ENGINEER SEAL 052434 TIMOTHY R. CARTER
9/25/2024

KHA PROJECT 017254013
DATE 06/26/2023
SCALE AS SHOWN
DESIGNED BY KEJ
DRAWN BY KEJ
CHECKED BY COB

SITE DETAILS

DEWITT KNIGHTDALE
PREPARED FOR
WIDEWATERS
TOWN OF KNIGHTDALE NORTH CAROLINA

SHEET NUMBER
C6.1

Plotted By: Barnes, Michael Sheet Set: DeWitt Knightdale Layout: C6.1 SITE DETAILS January 26, 2024 - 11:51:34am K:\RAL_LDEV\017254013_DeWitt Knightdale\Planning Phase\15_CAD Files\PlanSheets\C6.1 SITE DETAILS.dwg
This document, together with the concepts and designs presented herein, as an instrument of service, is intended only for the specific purpose and client for which it was prepared. Reuse of and improper reliance on this document without written authorization and adaptation by Kimley-Horn and Associates, Inc. shall be without liability to Kimley-Horn and Associates, Inc.

NOTES:

1. A MINIMUM OF 24" FROM OUTSIDE DIAMETER OF PIPE TO SIDE OF TRENCH MUST BE ALLOWED FOR COMPACTION OF FILL MATERIAL. BACKFILLING OF TRENCHES SHALL BE ACCOMPLISHED IMMEDIATELY AFTER THE PIPE IS LAID. THE FILL AROUND THE PIPE SHALL BE PLACED IN LAYERS NOT TO EXCEED 6". UNDER NO CIRCUMSTANCES SHALL WATER BE PERMITTED TO RISE IN UNBACKFILLED TRENCHES AFTER THE PIPE HAS BEEN PLACED. COMPACTION REQUIREMENTS SHALL BE ATTAINED BY THE USE OF MECHANICAL TAMPS ONLY. EACH AND EVERY LAYER OF BACKFILL SHALL BE PLACED LOOSE AND THOROUGHLY COMPACTED INTO PLACE.
2. ALL BACKFILL MATERIAL SHALL HAVE AN IN PLACE COMPACTED DENSITY OF AT LEAST 95% OF THE STANDARD PROCTOR MAXIMUM DENSITY.
3. THE FINAL 24" OF BACKFILL MATERIAL SHALL BE COMPACTED TO 100% OF THE STANDARD PROCTOR MAXIMUM DENSITY.
4. ALL TRENCHING OPERATIONS SHALL MEET OSHA STANDARDS.
5. BACKFILL MATERIAL BENEATH ROADWAY SHALL BE SELECT BACKFILL MATERIAL.

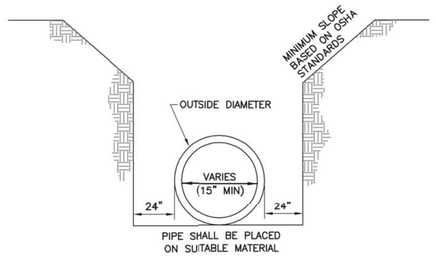

PIPE SHALL BE PLACED ON SUITABLE MATERIAL

REVISIONS	
DATE	DESCRIPTION

TOWN OF KNIGHTDALE STANDARD DETAILS | TRENCH FOR STORM DRAIN PIPES | STD. NO. 5.02

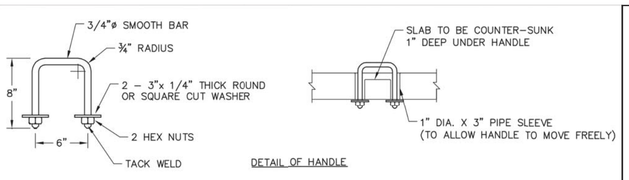

DETAIL OF HANDLE

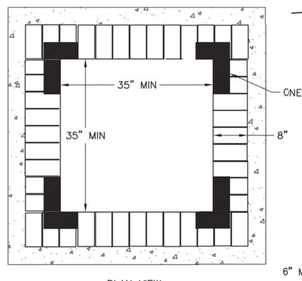

PLAN VIEW

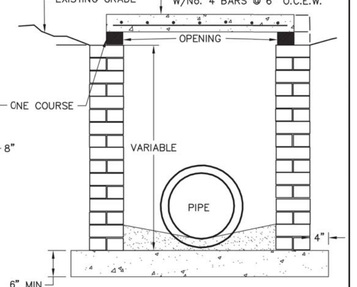

PROFILE

NOTES:

1. EITHER SOLID BRICK, SOLID BLOCK OR PRECAST CONRETE MAY BE USED.
2. PRECAST CONCRETE WALLS SHALL BE 6" THICK MINIMUM.
3. ALL CONCRETE SHALL BE 3000 P.S.I.
4. FOR 24" PIPE AND LARGER USE PIPE DIA. PLUS 12" AS INSDE DIMENSIONS.

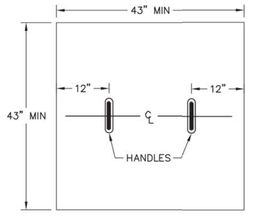

PRECAST CONCRETE SLAB

REVISIONS	
DATE	DESCRIPTION

TOWN OF KNIGHTDALE STANDARD DETAILS | STANDARD YARD INLET WITH CONCRETE SLAB | STD. NO. 5.03

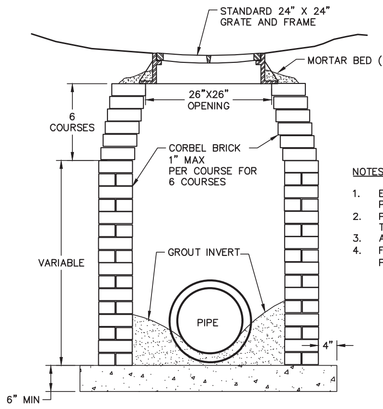

PROFILE

NOTES:

1. EITHER SOLID BRICK, SOLID BLOCK, OR PRECAST CONRETE MAY BE USED.
2. PRECAST CONCRETE WALLS SHALL BE 6" THICK MINIMUM.
3. ALL CONCRETE SHALL BE 3000 P.S.I.
4. FOR 24" PIPE AND LARGER USE PIPE DIA. PLUS 12" AS INSDE DIMENSIONS.

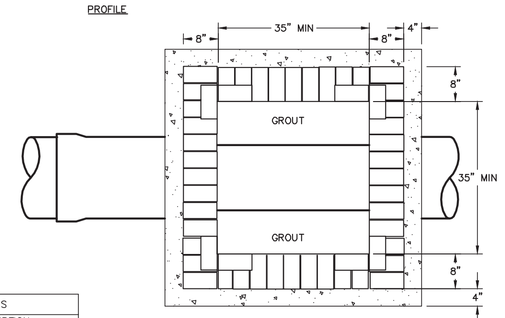

PLAN VIEW

REVISIONS	
DATE	DESCRIPTION

TOWN OF KNIGHTDALE STANDARD DETAILS | STANDARD DROP INLET WITH GRATE AND FRAME | STD. NO. 5.04

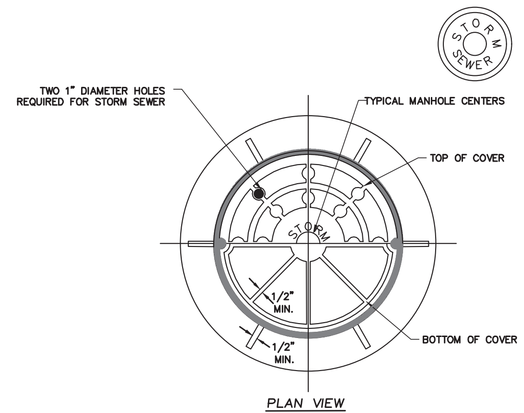

PLAN VIEW

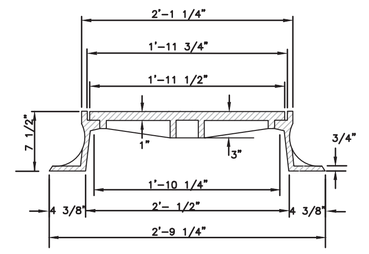

SECTION

MINIMUM AVERAGE WEIGHT	
RING	190
COVER	120
TOTAL	310

REVISIONS	
DATE	DESCRIPTION

TOWN OF KNIGHTDALE STANDARD DETAILS | STANDARD MANHOLE RING & COVER | STD. NO. 5.10

END ELEVATION J–J
WHERE 30" TO 36" PIPE IS USED

SIDE ELEVATION M–M
WHERE 42" TO 54" PIPE IS USED

PLAN

PLAN

SECTION X–X

PLAN VIEW

SECTION Y–Y

NOTES:

1. MORTAR JOINTS SHALL BE 1/2" THICK.
2. ALL CONCRETE SHALL BE 3000 P.S.I.
3. BASE SLABS SHALL BE FORMED PRIOR TO PLACING OF CONCRETE.
4. USE TYPE "A" GRATE AT SAG POINTS, OTHERWISE USE TYPE "B" OR "C" FOR THE APPROPRIATE FLOW DIRECTION.
5. MASONRY UNITS MAY BE JUMBO BRICK, CONCRETE BRICK OR SOLID CONCRETE BLOCK.
6. ALL WALLS GREATER THAN 6' IN DEPTH SHALL BE CONSTRUCTED 12" THICK

REVISIONS	
DATE	DESCRIPTION

1 of 2

TOWN OF KNIGHTDALE STANDARD DETAILS | STANDARD CURB INLET | STD. NO. 5.05

TOWN OF KNIGHTDALE STANDARD DETAILS — STANDARD CURB INLET — 2 of 2 — STD. NO. 5.05

PLAN OF TOP SLAB

ELEVATION
NORMAL CURB & GUTTER ON LIGHT GRADES

PLAN
CURB & GUTTER WITH CATCH BASIN ON STEEP GRADES

ELEVATION
NORMAL CURB & GUTTER ON STEEP GRADES

DIMENSIONS AND QUANTITIES FOR BRICK CATCH BASINS

DIMENSIONS FOR BOX AND PIPE								COVER DIMENSIONS		REINFORCING							CUBIC YARDS OF CONCRETE IN BOX			BRICK MASONRY	DEDUCTIONS FOR ONE PIPE	
PIPE	SPAN	WIDTH	WIDTH	SPAN	HEIGHT	HEIGHT				BARS "U"		BARS "V"		BARS "W"		TOTAL LBS	TOP SLAB	FLOOR	TOTAL	CU YDS		
D	A	B	C	G	MIN H1	H2	VARIABLE	E	F	NO	LENGTH	NO	LENGTH	NO	LENGTH						CM	RC
15"	3'-0"	2'-2"			3'-8"															0.321	0.0308	0.047
18"					4'-10"															ABOVE	0.0442	0.065
24"					5'-4"															MIN H1	0.0794	0.113
30"			3'-4"		5'-4"			1'-10"	4'-4"	4	3'-6"	3	4'-1"	3	4'-1"	45					0.1224	0.170
36"			3'-10"		5'-8"			2'-4"	4'-4"	4	4'-0"	4	4'-1"	3	4'-1"	49					0.1760	0.330
42"				4'-5"	6'-4"			2'-1"	5'-6"	4	5'-0"	3	5'-3"	3	5'-3"	38				0.3231 H2	0.2400	0.323
48"				5'-0"	6'-10"			2'-4"	5'-6"	4	5'-6"	4	5'-3"	3	5'-3"	40					0.3131	0.460
54"	3'-0"	2'-2"		5'-7"	7'-4"			3'-1"	5'-6"	4	6'-0"	6	5'-3"	3	5'-3"	48					0.3958	0.580

NOTE:
ALL DOWNSPOUT COLLECTOR PIPE SHALL BE SCHEDULE 40 PVC.

NO SCALE

TYPICAL ROOF DRAIN CONNECTION
NOT TO SCALE

No.	REVISIONS	DATE	BY
2	REVISED PER TOK COMMENTS	01/12/24	DPM
1	REVISED PER TOK COMMENTS	9/12/23	ASA

Kimley»Horn
© 2023 KIMLEY-HORN AND ASSOCIATES, INC.
421 FAYETTEVILLE STREET, SUITE 600, RALEIGH, NC 27601
PHONE: 919-677-2000 FAX: 919-677-2050
WWW.KIMLEY-HORN.COM
#F-0102

NORTH CAROLINA PROFESSIONAL ENGINEER SEAL 052434 TIMOTHY R. CARTER
4/25/2024

KHA PROJECT	017254013
DATE	06/26/2023
SCALE	AS SHOWN
DESIGNED BY	KEJ
DRAWN BY	KEJ
CHECKED BY	COB

STORM DRAINAGE DETAILS

DEWITT KNIGHTDALE
PREPARED FOR
WIDEWATERS
TOWN OF KNIGHTDALE NORTH CAROLINA

SHEET NUMBER
C7.0

a. **Town Certification.** This design has been reviewed by the Engineer for the Town of Knightdale, and to the best of my knowledge and belief, it conforms to the requirements established in the Standard Specifications of the Town of Knightdale.

By: Samuel A. MacDonald Date: _____
Town Engineer

These plans are approved by the Town of Knightdale and serve as construction plans for this project.

By: Kevin Lewis Date: _____
Administrator

Plotted By: Barnes, Michael Sheet Set: DeWitt Knightdale Layout: C7.0 STORM DRAINAGE DETAILS January 26, 2024 11:51:41am K:\RAL_LOCAL\017254013_DeWitt Knightdale\Planning Phase\15_CAD Files\PlanSheets\C7.0 STORM DRAINAGE DETAILS.dwg
This document, together with the concepts and designs presented herein, as an instrument of service, is intended only for the specific purpose and client for which it was prepared. Reuse of and improper reliance on this document without written authorization and adaptation by Kimley-Horn and Associates, Inc. shall be without liability to Kimley-Horn and Associates, Inc.

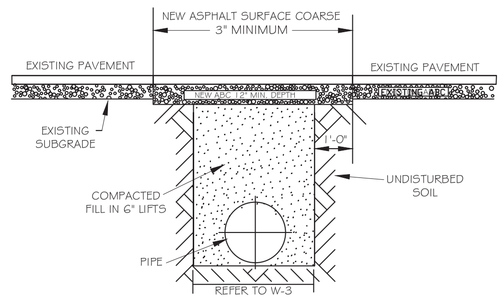

NOTES:

1. THE PAVEMENT CUT SHALL BE DEFINED BY A STRAIGHT EDGE AND CUT WITH AN APPROPRIATE SAW CUT MACHINE.
2. THE TRENCH SUBGRADE MATERIAL SHALL BE BACKFILLED WITH SUITABLE MATERIAL AND COMPACTED TO A DENSITY OF AT LEAST 95% OF THAT OBTAINED BY COMPACTING A SAMPLE OF THE MATERIAL IN ACCORDANCE WITH AASHTO T-99 AS MODIFIED BY NCDOT.
3. THE FINAL 1'-0" OF FILL SHALL CONSIST OF ABC MATERIAL COMPACTED TO A DENSITY EQUAL TO 100% OF THAT OBTAINED BY COMPACTING A SAMPLE OF THE MATERIAL IN ACCORDANCE WITH AASHTO T-80 AS MODIFIED BY NCDOT.
4. THE ENTIRE THICKNESS/ VERTICAL EDGE OF CUT SHALL BE TACKED.
5. THE SAME DEPTH OF PAVEMENT MATERIAL WHICH EXISTS SHALL BE REINSTALLED, BUT IN NO CASE SHALL THE ASPHALT BE LESS THAN 3" THICK.
6. THE ASPHALT PAVEMENT MATERIAL SHALL BE INSTALLED AND COMPACTED THOROUGHLY WITH A SMOOTH DRUM ROLLER TO ACHIEVE A SMOOTH LEVEL PATCH.
7. REFER TO CITY OF RALEIGH STANDARDS FOR TRENCHES AND PIPE BEDDING, W-3, FOR ADDITIONAL DETAILS.
8. NO HAND PATCHING ALLOWED.
9. PAVEMENT CUTS WITHIN NCDOT ROW SHALL CONFORM TO THE APPROVED ON SITE ENCROACHMENT PERMIT.

CITY OF RALEIGH
DEPARTMENT OF PUBLIC UTILITIES

STANDARD ASPHALT PAVEMENT PATCH DETAIL

DWG. NO.	REVISIONS	DATE	REVISIONS	DATE
W-2	RRH	3-31-00	A.B.B.	4-15-04
	D.W.C.	11-1-99	J.P.S.	10-29-10

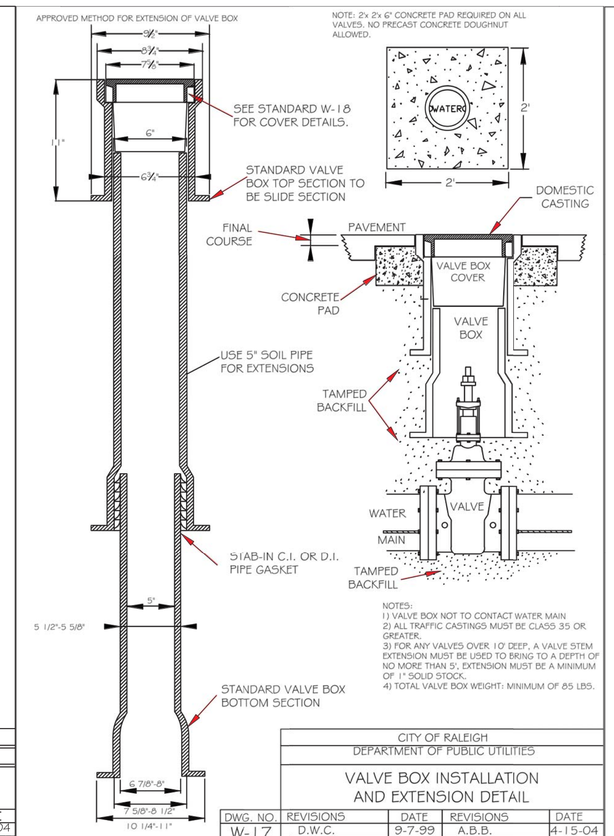

NOTES:
1) VALVE BOX NOT TO CONTACT WATER MAIN
2) ALL TRAFFIC CASTINGS MUST BE CLASS 35 OR GREATER.
3) FOR ANY VALVES OVER 10' DEEP, A VALVE STEM EXTENSION MUST BE USED TO BRING TO A DEPTH OF NO MORE THAN 5'. EXTENSION MUST BE A MINIMUM OF 1" SOLID STOCK.
4) TOTAL VALVE BOX WEIGHT: MINIMUM OF 85 LBS.

CITY OF RALEIGH
DEPARTMENT OF PUBLIC UTILITIES

VALVE BOX INSTALLATION AND EXTENSION DETAIL

DWG. NO.	REVISIONS	DATE	REVISIONS	DATE
W-17	D.W.C.	9-7-99	A.B.B.	4-15-04
	RRH	3-31-00	DRL	9-16-07

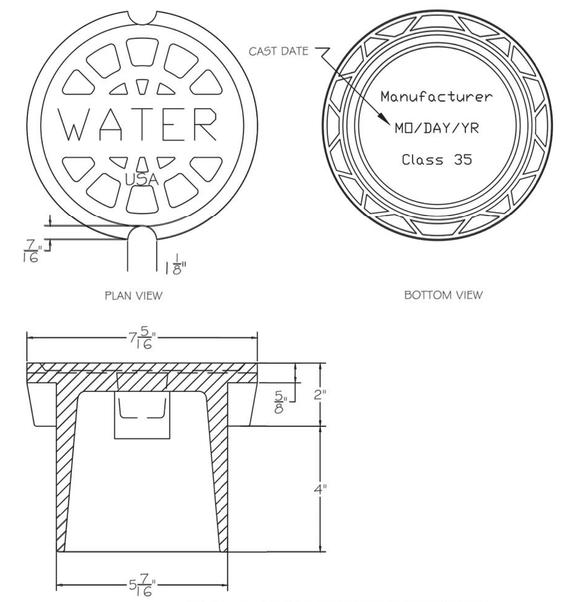

NOTE 1 - "WATER" LETTERING MUST BE 1" RAISED (RECESSED FLUSH)
NOTE 2 - VALVE COVER SHALL BE DOMESTICALLY CAST.
NOTE 3 - COVER MUST HAVE A MINIMUM WEIGHT OF 25 POUNDS.
NOTE 4 - COVER MUST BE CLASS 35 OR GREATER.
NOTE 5 - COVER MUST MEET OR EXCEED AASHTO H-20 LOAD REQUIREMENTS.

CITY OF RALEIGH
DEPARTMENT OF PUBLIC UTILITIES

5 1/4" VALVE BOX DROP LID WITH 4" SKIRT

DWG. NO.	REVISIONS	DATE	REVISIONS	DATE
W-18				

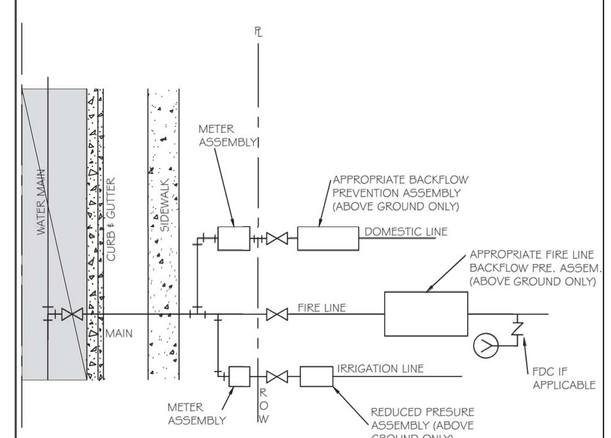

1. SERVICE TAPS FOR 2" AND SMALLER DOMESTIC SERVICES MAY BE BY CORPORATION COCKS. LARGER SERVICES WILL REQUIRE A TEE AND GATE VALVE OR TAPPING SLEEVE AND VALVE ASSEMBLY AND 90° BEND.
2. DOMESTIC SERVICE TAPS SHALL BE ALLOWED ONLY ON 6" OR LARGER FIRE LINES BEFORE THE BACKFLOW ASSEMBLY.
3. ONE DOMESTIC TAP PER FIRE LINE ON STREET SIDE OF BACKFLOW. 4. FIRE LINE SHALL HAVE A FIRE HYDRANT OR BLOW OFF ASSEMBLY AT ITS END TO FACILITATE FLUSHING WHEN NEEDED.
5. IRRIGATION METER SHALL BE LOCATED ON THE SIDE OF DOMESTIC METER WITH INCREASING ADDRESSES.
6. THE BACKFLOW SHALL BE INSTALLED NO MORE THAN 10' FROM THE METER IN A VISIBLE LOCATION.
7. DOMESTIC/IRRIGATION BACKFLOW RISER/STANDPIPE SHALL BE OF COPPER OR BRASS.
8. THE RP RELIEF VALVE SHALL BE A MINIMUM OF 12" ABOVE ANY MATERIAL (MULCH INCLUDED) OR GRADE.
9. A SERVICE VALVE IS REQUIRED AFTER THE METER BUT BEFORE THE BACKFLOW ASSEMBLY FOR MAINTENANCE AND REPLACEMENT PURPOSES.
10. THE INSTALLATION MUST ALSO MEET ALL CODE REQUIREMENTS PER THE NC PLUMBING CODE.

CITY OF RALEIGH
DEPARTMENT OF PUBLIC UTILITIES

FIRE, DOMESTIC & IRRIGATION OPTIONS SCHEMATIC

DWG. NO.	REVISIONS	DATE	REVISIONS	DATE
W-34	D.W.C.	11-18-99	A.B.B.	7-10-04
	RRH	3-31-00	D.H.L.	6/16/08

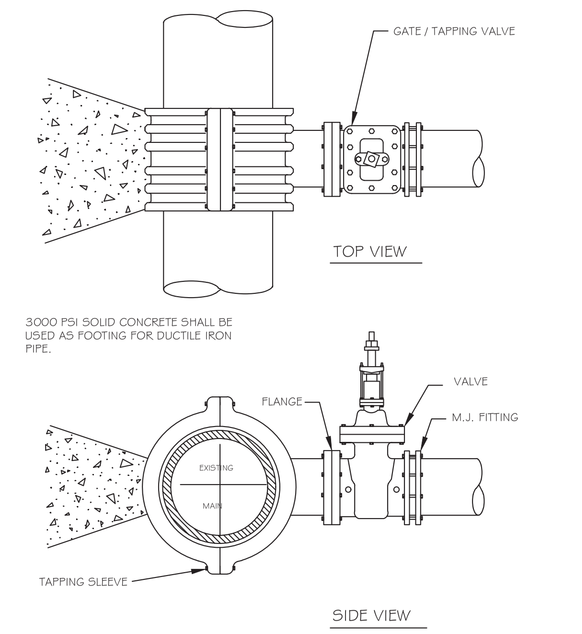

NOTES:
1. CONCRETE SHALL NOT CONTACT BOLTS OR ENDS OF MECHANICAL JOINT FITTINGS.
2. SEE STANDARD REACTION BLOCK TABLES, W-10 AND W-11 FOR AREA OF CONCRETE REQUIRED.

CITY OF RALEIGH
DEPARTMENT OF PUBLIC UTILITIES

4" - 24" STANDARD TAPPING SLEEVE AND VALVE ASSEMBLY

DWG. NO.	REVISIONS	DATE	REVISIONS	DATE
W-14	Y.C.A.	2-3-1-91	RRH	3-31-00
	D.W.C.	9-7-99	J.P.S.	1-1-10

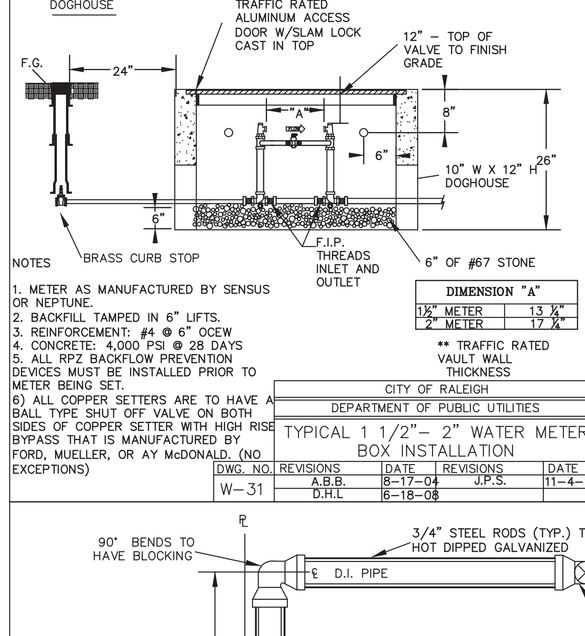

NOTES
1. METER AS MANUFACTURED BY SENSUS OR NEPTUNE.
2. BACKFILL TAMPED IN 6" LIFTS.
3. REINFORCEMENT: #4 @ 6" OCEW
4. CONCRETE: 4,000 PSI @ 28 DAYS
5. ALL RPZ BACKFLOW PREVENTION DEVICES MUST BE INSTALLED PRIOR TO METER BEING SET.
6) ALL COPPER SETTERS ARE TO HAVE A BALL TYPE SHUT OFF VALVE ON BOTH SIDES OF COPPER SETTER WITH HIGH RISE BYPASS THAT IS MANUFACTURED BY FORD, MUELLER, OR AY McDONALD. (NO EXCEPTIONS)

DIMENSION "A"	
1½" METER	13 ½"
2" METER	17 ½"

** TRAFFIC RATED VAULT WALL THICKNESS

CITY OF RALEIGH
DEPARTMENT OF PUBLIC UTILITIES

TYPICAL 1 1/2"– 2" WATER METER BOX INSTALLATION

DWG. NO.	REVISIONS	DATE	REVISIONS	DATE
W-31	A.B.B.	8-17-04	J.P.S.	11-4-10
	D.H.L.	6-18-08		

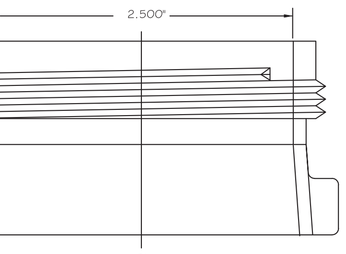

CITY OF RALEIGH
DEPARTMENT OF PUBLIC UTILITIES

HYDRANT OPERATING NUT AND 2 1/2" OUTLET THREADS

DWG. NO.	REVISIONS	DATE	REVISIONS	DATE
W-6	RRH	3-31-00	DRL	2-18-08
	A.B.B.	4-13-04	J.P.S.	1-1-10

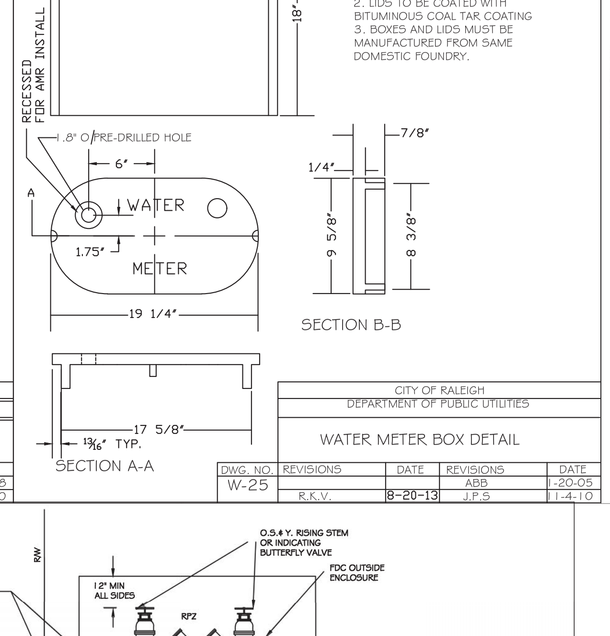

NOTES:
1. COVER WEIGHT: 13 LBS +/- 5%
2. LIDS TO BE COATED WITH BITUMINOUS COAL TAR COATING
3. BOXES AND LIDS MUST BE MANUFACTURED FROM SAME DOMESTIC FOUNDRY.

CITY OF RALEIGH
DEPARTMENT OF PUBLIC UTILITIES

WATER METER BOX DETAIL

DWG. NO.	REVISIONS	DATE	REVISIONS	DATE
W-25	R.K.V.	8-20-13	J.P.S.	1-4-10

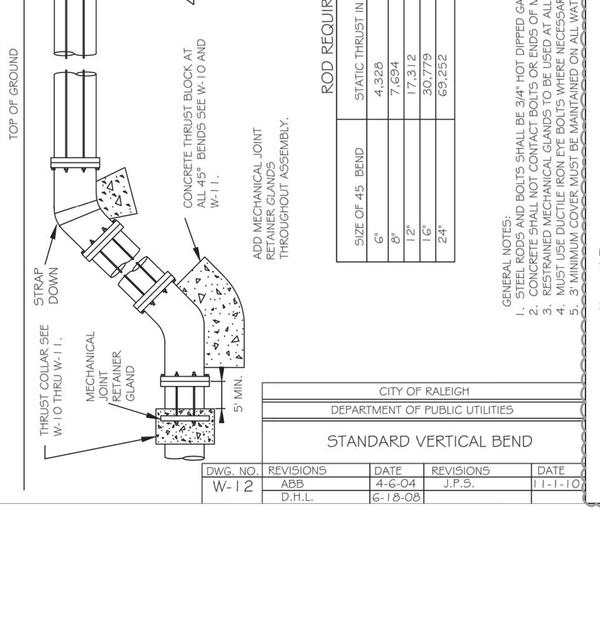

ROD REQUIREMENTS	
SIZE OF 45 BEND	STATIC THRUST IN POUNDS
6"	4,325
8"	7,634
12"	17,312
16"	30,759
24"	69,252

NO. OF RODS REQUIRED
2
4
4
4
6
6

GENERAL NOTES:
1. STEEL RODS AND BOLTS SHALL BE 3/4" HOT DIPPED GALVANIZED.
2. CONCRETE SHALL NOT CONTACT BOLTS OR ENDS OF MECHANICAL JOINT FITTINGS.
3. SEE STANDARD REACTION BLOCK TABLES, W-10 AND W-11 FOR AREA OF CONCRETE REQUIRED.
4. MUST USE DUCTILE IRON FIT BOLTS WHERE NECESSARY.
5. 3' MINIMUM COVER MUST BE MAINTAINED ON ALL WATER MAINS

CITY OF RALEIGH
DEPARTMENT OF PUBLIC UTILITIES

STANDARD VERTICAL BEND

DWG. NO.	REVISIONS	DATE	REVISIONS	DATE
W-12	ABB	4-6-04	J.P.S.	1-1-10
	D.H.L.	6-18-08		

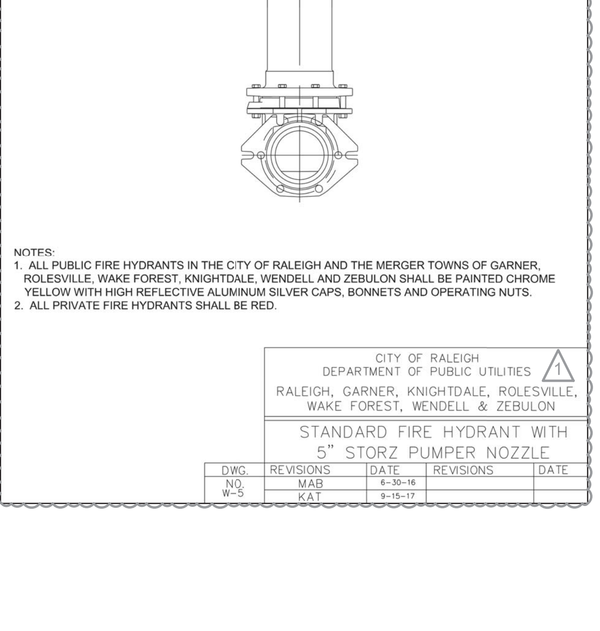

NOTES:
1. ALL PUBLIC FIRE HYDRANTS IN THE CITY OF RALEIGH AND THE MERGER TOWNS OF GARNER, ROLESVILLE, WAKE FOREST, KNIGHTDALE, WENDELL AND ZEBULON SHALL BE PAINTED CHROME YELLOW WITH HIGH REFLECTIVE ALUMINUM SILVER CAPS, BONNETS AND OPERATING NUTS.
2. ALL PRIVATE FIRE HYDRANTS SHALL BE RED.

CITY OF RALEIGH
DEPARTMENT OF PUBLIC UTILITIES
RALEIGH, GARNER, KNIGHTDALE, ROLESVILLE, WAKE FOREST, WENDELL & ZEBULON

STANDARD FIRE HYDRANT WITH 5" STORZ PUMPER NOZZLE

DWG. NO.	REVISIONS	DATE	REVISIONS	DATE
W-5	MAB	8-30-16		
	KAT	9-15-17		

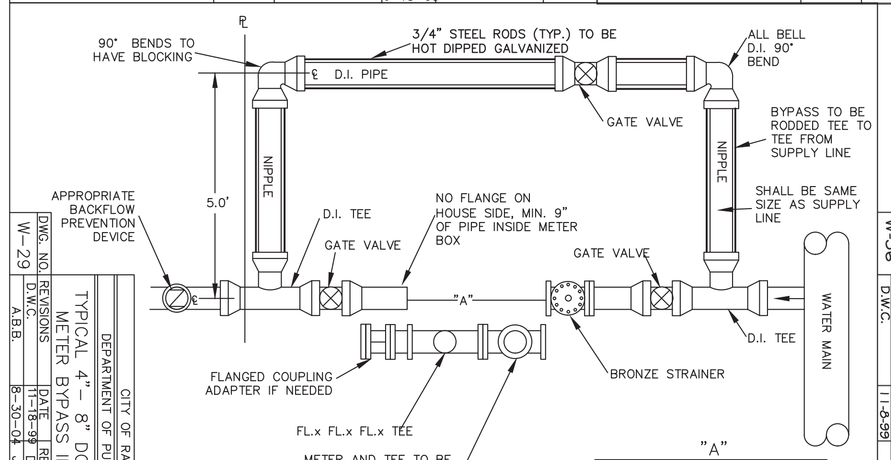

"A"			
4" METER	28"	8" METER	39"
6" METER	35"		

PLAN VIEW

NOTES:
1) DOMESTIC METERS ONLY
2) ALL FITTINGS ARE TO BE MECHANICAL JOINT
3) BRONZE STRAINERS SHALL HAVE NON-THREADED BOLT HOLES.

CITY OF RALEIGH
DEPARTMENT OF PUBLIC UTILITIES

TYPICAL 4" – 8" DOMESTIC WATER METER BYPASS INSTALLATION

DWG. NO.	REVISIONS	DATE	REVISIONS	DATE
W-29	D.W.C.	11-18-99	A.B.B.	8-30-04
	D.H.L.	6/18/08	J.P.S.	11-4-10

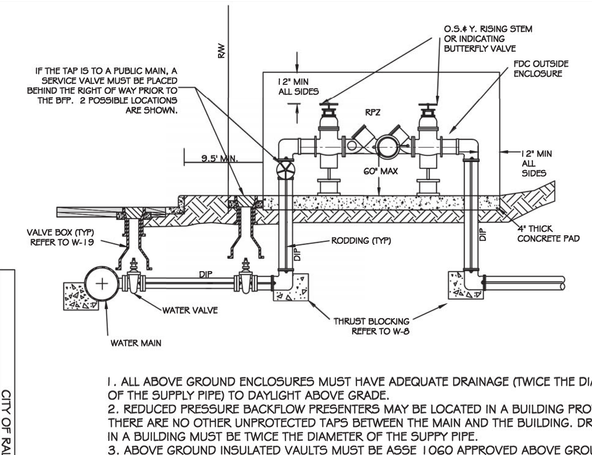

1. ALL ABOVE GROUND ENCLOSURES MUST HAVE ADEQUATE DRAINAGE (TWICE THE DIAMETER OF THE SUPPLY PIPE) TO DAYLIGHT ABOVE GRADE.
2. REDUCED PRESSURE BACKFLOW PRESENTERS MAY BE LOCATED IN A BUILDING PROVIDED THERE ARE NO OTHER UNPROTECTED TAPS BETWEEN THE MAIN AND THE BUILDING. DRAINAGE IN A BUILDING MUST BE TWICE THE DIAMETER OF THE SUPPY PIPE.
3. ABOVE GROUND INSULATED VAULTS MUST BE ASSE 1060 APPROVED ABOVE GROUND ENCLOSURES. SEE CROSS CONNECTION MANUAL FOR ENCLOSURE FREEZE PROTECTION AND CERTIFICATION REQUIREMENTS.
4. RESIDENTIAL LAWN IRRIGATION R.P. ASSEMBLIES THAT ARE REMOVED TO PREVENT FREEZING IN THE WINTER MONTHS MUST BE CAPPED OFF. ALL ABOVE GROUND ASSEMBLIES, EXCEPT RESIDENTIAL LAWN IRRIGATION ASSEMBLIES, MUST BE PROTECTED FROM FROST.
6. FOR ENCLOSURE DIMENSIONS SEE DETAIL W-34.
7. STEEL RODS AND BOLTS SHALL BE 3/4" HOT DIPPED GALVANIZED.
8. ALL ASSEMBLIES MUST BE ON THE CURRENT APPROVAL LIST.

CITY OF RALEIGH
DEPARTMENT OF PUBLIC UTILITIES

TYPICAL REDUCED PRESSURE ZONE BACKFLOW PREVENTER ASSEMBLY

DWG. NO.	REVISIONS	DATE	REVISIONS	DATE
W-36	D.W.C.	12-3-99	A.B.B.	7-10-04
		11-18-99	D.H.L.	6/16/08

Public
Sewer Collection / Extension System

The City of Raleigh consents to the connection and extension of the City's public sewer system as shown on this plan. The material and Construction methods used for this project shall conform to the standards and specifications of the City's Public Utilities Handbook.

City of Raleigh
Public Utilities Department Permit # _____

Authorization to Construct _____

Date _____

Private
Sewer Collection / Extension System

The City of Raleigh consents to the connection to its public sewer system and extension of the private sewer collection system as shown on this plan. The material and constructions methods used for this project shall conform to the standards and specifications of the City's Public Utilities Handbook.

City of Raleigh
Public Utilities Department Permit # _____

Authorization to Construct _____
Cydney S. Terry

Date _____

a. **Town Certification.** This design has been reviewed by the Engineer for the Town of Knightdale, and to the best of my knowledge and belief, it conforms to the requirements established in the Standard Specifications of the Town of Knightdale.

By: Samuel A. MacDonald Date: _____
Town Engineer

These plans are approved by the Town of Knightdale and serve as construction plans for this project.

By: Kevin Lewis Date: _____
Administrator

No.	REVISIONS	DATE	BY
2	REVISED PER TOK COMMENTS	01/12/24	DPM
1	REVISED PER TOK COMMENTS	9/12/23	ASA

Kimley»Horn
© 2023 KIMLEY-HORN AND ASSOCIATES, INC.
421 FAYETTEVILLE STREET, SUITE 600, RALEIGH, NC 27601
PHONE: 919-677-2000 FAX: 919-677-2050
WWW.KIMLEY-HORN.COM
#F-0102

NORTH CAROLINA PROFESSIONAL ENGINEER SEAL 052434 TIMOTHY R. CARTER 4/25/2024

KHA PROJECT	017254013
DATE	06/26/2023
SCALE	AS SHOWN
DESIGNED BY	KEJ
DRAWN BY	KEJ
CHECKED BY	COB

UTILITY DETAILS

DEWITT KNIGHTDALE
PREPARED FOR
WIDEWATERS
TOWN OF KNIGHTDALE
NORTH CAROLINA

SHEET NUMBER
C8.0

Plotted By: Barnes, Michael Sheet Set: DeWitt Knightdale Layout: C8.0 UTILITY DETAILS January 26, 2024 11:51:50am K:\RAL_LDEV\017254013-DeWitt Knightdale\Planning Phase\15-CAD Files\PlanSheets\C8.0 UTILITY DETAILS.dwg
This document, together with the concepts and designs presented herein, as an instrument of service, is intended only for the specific purpose and client for which it was prepared. Reuse of and improper reliance on this document without written authorization and adaptation by Kimley-Horn and Associates, Inc. shall be without liability to Kimley-Horn and Associates, Inc.

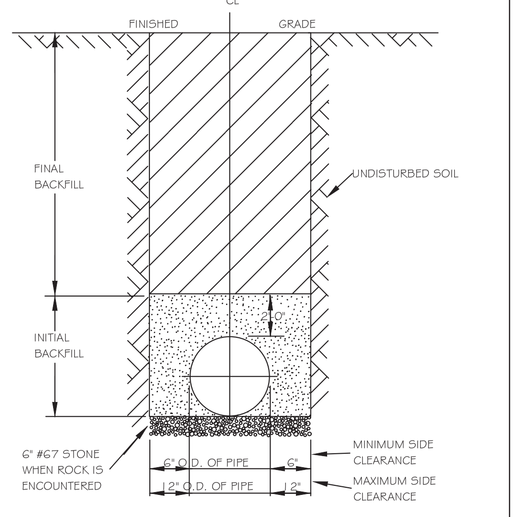

NOTES:
1. TRENCHES REQUIRING SHORING AND BRACING, DIMENSIONS SHALL BE TAKEN FROM THE INSIDE FACE OF THE SHORING AND BRACING.
2. NO ROCKS OR BOULDERS 4" OR LARGER TO BE USED IN INITIAL BACKFILL.
3. ALL BACKFILL MATERIAL SHALL BE SUITABLE NATIVE MATERIAL.
4. BACKFILL SHALL BE TAMPED IN 6" LIFTS IN TRAFFIC AREAS, 12" IN NON-TRAFFIC AREAS.
5. ACHIEVE 80% COMPACTION IN NON-TRAFFIC AREAS, AND 95% COMPACTION IN TRAFFIC AREAS.
6. IF IN EASEMENT 4" TOPSOIL, AND 12" CLEAN SELECT FILL MAY BE REQUIRED.
7. NO BOULDERS 8" IN DIAMETER OR GREATER ALLOWED IN FINAL BACKFILL.

CITY OF RALEIGH				
DEPARTMENT OF PUBLIC UTILITIES				
TRENCH BOTTOM DIMENSIONS & BACKFILLING REQUIREMENTS FOR DUCTILE IRON				
DWG. NO.	REVISIONS	DATE	REVISIONS	DATE
S-4	D.W.C.	3-3-99		
	RRH	3-30-00		

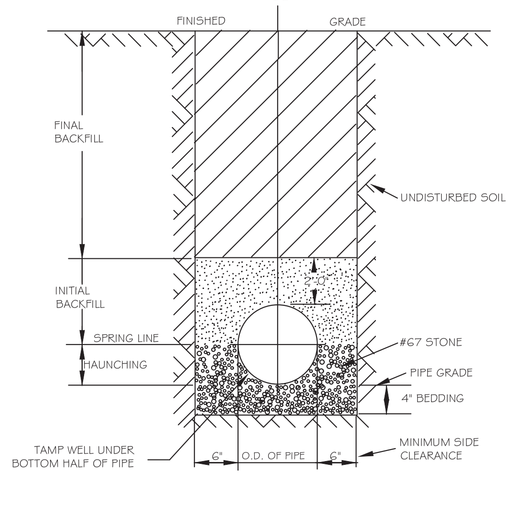

TYPICAL TRENCH BOTTOM DIMENSIONS FOR SDR 35 PVC GRAVITY PIPE

NOTES:
1. FOR TRENCHES REQUIRING SHORING AND BRACING, DIMENSIONS SHALL BE TAKEN FROM THE INSIDE FACE OF THE SHORING AND BRACING.
2. NO ROCKS OR BOULDERS 4" OR LARGER TO BE USED IN INITIAL BACKFILL.
3. ALL BACKFILL MATERIAL SHALL BE SUITABLE NATIVE MATERIAL.
4. BACKFILL SHALL BE TAMPED IN 6" LIFTS IN TRAFFIC AREAS, 12" IN NON-TRAFFIC AREAS.

CITY OF RALEIGH				
DEPARTMENT OF PUBLIC UTILITIES				
TRENCH BOTTOM DIMENSIONS AND BACKFILLING REQUIREMENTS FOR PVC GRAVITY SEWER MAIN				
DWG. NO.	REVISIONS	DATE	REVISIONS	DATE
S-5	TO NOTES	3-1-87	D.W.C.	9-3-99
		7-2-92	RRH	3-30-00

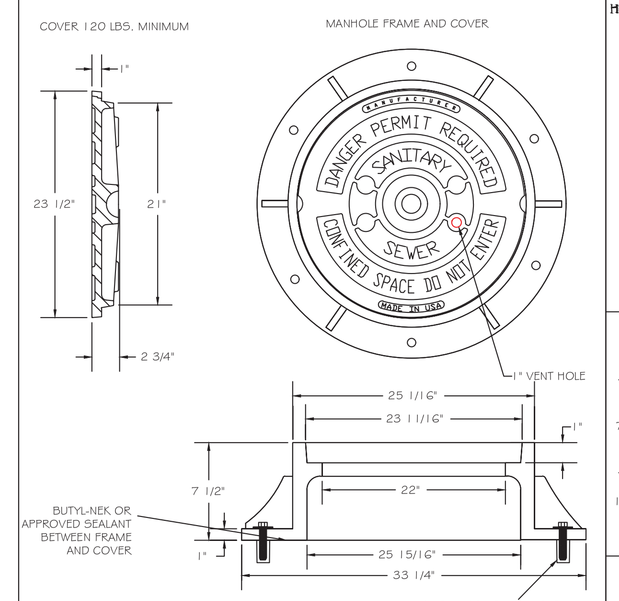

NOTES:
1) ALL MANHOLE FRAMES SHALL BE DOMESTICALLY CAST.
2) FRAME SHALL BE A MINIMUM WEIGHT OF 182 LBS. WITHIN PUBLIC ROW AND 160 LBS. WITHIN EASEMENTS.
3) COVER SHALL WEIGH A MIN. OF 120 LBS.
4) ALL MANHOLE FRAMES OUTSIDE OF PAVED SURFACES SHALL BE BOLTED TO THE CONE SECTION OR RING WITH A MINIMUM OF 4 BOLTS PER FRAME.

CITY OF RALEIGH				
DEPARTMENT OF PUBLIC UTILITIES				
STANDARD MANHOLE COVER				
DWG. NO.	REVISIONS	DATE	REVISIONS	DATE
S-25	3-1-87	3-1-87	A.B.B.	2-9-05
	RRH	3-30-00	D.H.L.	6-18-08

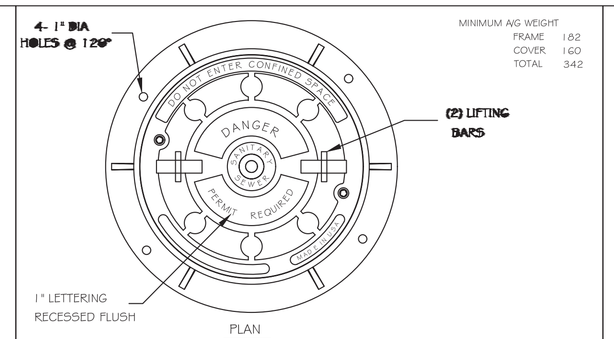

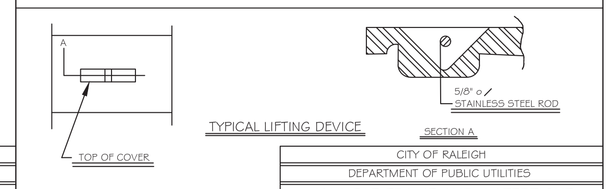

CITY OF RALEIGH				
DEPARTMENT OF PUBLIC UTILITIES				
MANHOLE FRAME AND WATERTIGHT COVER				
DWG. NO.	REVISIONS	DATE	REVISIONS	DATE
S-26	3-1-87	3-1-87	ABB	9-29-05
	RRH	3-30-00	D.H.L.	6/18/08

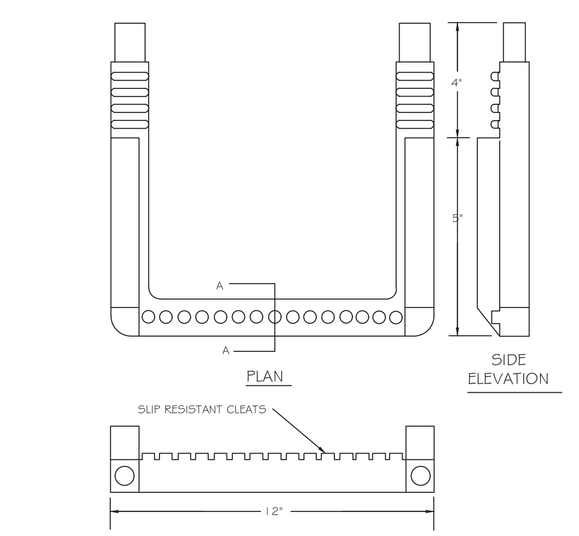

CITY OF RALEIGH				
DEPARTMENT OF PUBLIC UTILITIES				
STANDARD SLIP RESISTANT MANHOLE STEP DETAIL				
DWG. NO.	REVISIONS	DATE	REVISIONS	DATE
S-28	RRH	3-30-00		

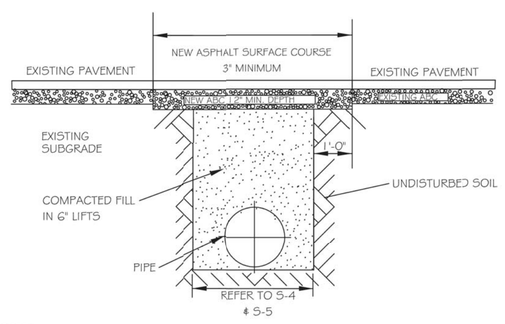

NOTES:
1. IN NCDOT MAINTAINED ROADWAYS ENCROACHMENT PAVEMENT PATCH REQUIREMENTS SHALL TAKE PRECEDENCE.
2. THE PAVEMENT CUT SHALL BE DEFINED BY A STRAIGHT EDGE AND CUT WITH AN APPROPRIATE SAWCUT MACHINE.
3. THE TRENCH SUBGRADE MATERIAL SHALL BE BACKFILLED WITH SUITABLE MATERIAL AND COMPACTED TO A DENSITY OF AT LEAST 95% OF THAT OBTAINED BY COMPACTING A SAMPLE OF THE MATERIAL IN ACCORDANCE WITH AASHTO T-99 AS MODIFIED BY NCDOT.
4. THE FINAL 1'-0" FILL SHALL CONSIST OF ABC MATERIAL COMPACTED TO A DENSITY EQUAL TO 100% OF THAT OBTAINED BY COMPACTING A SAMPLE OF THE MATERIAL IN ACCORDANCE WITH AASHTO T-80 AS MODIFIED BY NCDOT.
5. THE ENTIRE THICKNESS AND VERTICAL EDGE OF CUT SHALL BE TACKED.
6. THE SAME DEPTH OF PAVEMENT MATERIAL WHICH EXISTS SHALL BE REINSTALLED, BUT IN NO CASE SHALL THE ASPHALT BE LESS THAN 3" THICK.
7. THE ASPHALT PAVEMENT MATERIAL SHALL BE INSTALLED AND COMPACTED THOROUGHLY WITH A SMOOTH DRUM ROLLER TO ACHIEVE A SMOOTH LEVEL PATCH.
8. REFER TO CITY OF RALEIGH STANDARDS FOR TRENCHES AND PIPE BEDDING (S-4 & S-5) FOR ADDITIONAL DETAILS.
9. NO HAND PATCHING ALLOWED.
10. PAVEMENT CUTS WITHIN NCDOT ROW SHALL CONFORM TO THE APPROVED ON SITE ENCROACHMENT PERMIT.

CITY OF RALEIGH				
DEPARTMENT OF PUBLIC UTILITIES				
STANDARD ASPHALT PAVEMENT PATCH DETAIL				
DWG. NO.	REVISIONS	DATE	REVISIONS	DATE
S-3	D.W.C.	11-1-99	A.B.B.	4-19-04
	RRH	3-30-00	J.F.S.	10-8-10

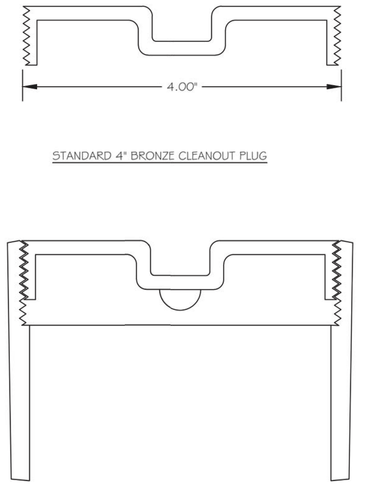

STANDARD 4" BRONZE CLEANOUT PLUG

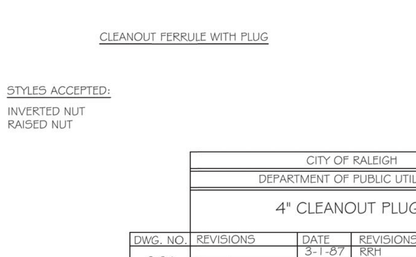

CLEANOUT FERRULE WITH PLUG

STYLES ACCEPTED:
INVERTED NUT
RAISED NUT

CITY OF RALEIGH				
DEPARTMENT OF PUBLIC UTILITIES				
4" CLEANOUT PLUG				
DWG. NO.	REVISIONS	DATE	REVISIONS	DATE
S-34		3-1-87	RRH	3-30-00
	D.W.C.	3-27-98		

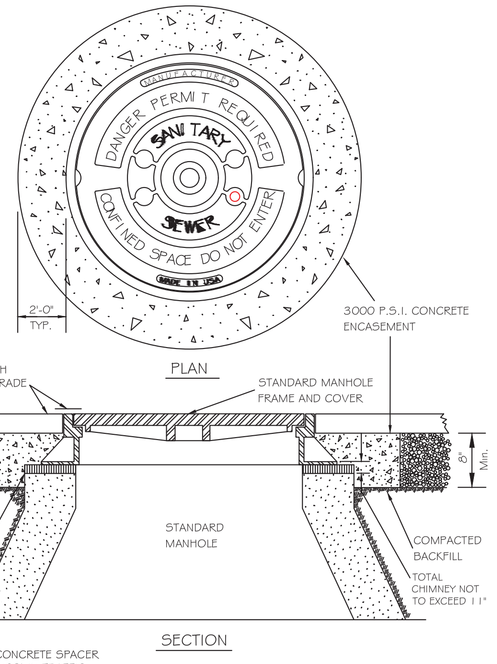

CITY OF RALEIGH				
DEPARTMENT OF PUBLIC UTILITIES				
STANDARD MANHOLE FRAME AND COVER DETAIL WITHIN PAVED SURFACES				
DWG. NO.	REVISIONS	DATE	REVISIONS	DATE
S-29 Y.C.A.		2-3-91	ABB	9-20-04
	RRH	3-30-00	DHL	1-29-07

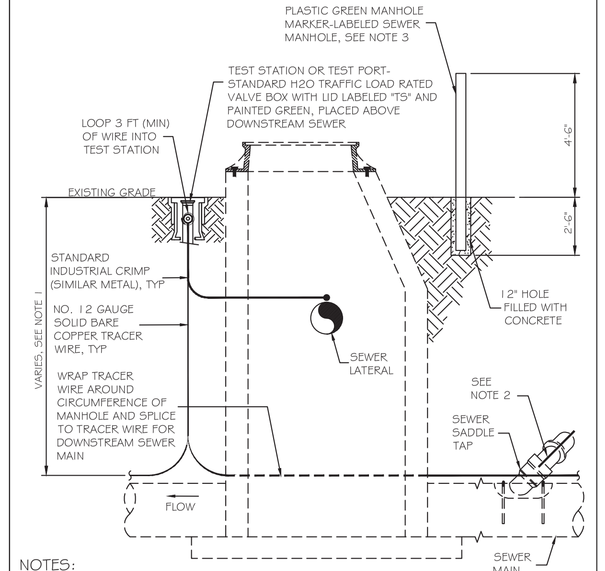

NOTES:
1. THE TRACER WIRE SHALL BE CONTINUOUS TO THE GREATEST EXTENT POSSIBLE. FOR GRAVITY MAIN AND OR LATERAL INSTALLATIONS LESS THAN 8 FT, THE TRACING WIRE SHALL BE ATTACHED TO THE PIPE. TRACER WIRE SHALL BE LAID FLAT AND SECURELY AFFIXED TO THE PIPE AT 10 FOOT INTERVALS. FOR GRAVITY MAIN AND OR LATERAL INSTALLATION DEEPER THAN 8 FT, THE TRACING WIRE SHALL BE INSTALLED AT A DEPTH OF 7-8 FT. THE WIRE SHALL BE PROTECTED FROM DAMAGE DURING THE EXECUTION OF THE WORK. NO BREAKS OF CUTS IN THE TRACER WIRE SHALL BE PERMITTED.
2. WHERE LATERAL TAPS ARE MADE BY SERVICE SADDLES, THE TRACER WIRE SHALL NOT BE ALLOWED TO TO BE PLACED BETWEEN THE SADDLE AND MAIN.
3. MANHOLE MARKERS SHALL BE PLACED ADJACENT TO MANHOLES AT THE DISCRETION OF OWNER OR OWNER'S REPRESENTATIVE.

CITY OF RALEIGH				
DEPARTMENT OF PUBLIC UTILITIES				
GRAVITY SEWER MAIN TRACER WIRE AND MANHOLE MARKER				
DWG. NO.	REVISIONS	DATE	REVISIONS	DATE
S-20A	WKD	09-14		

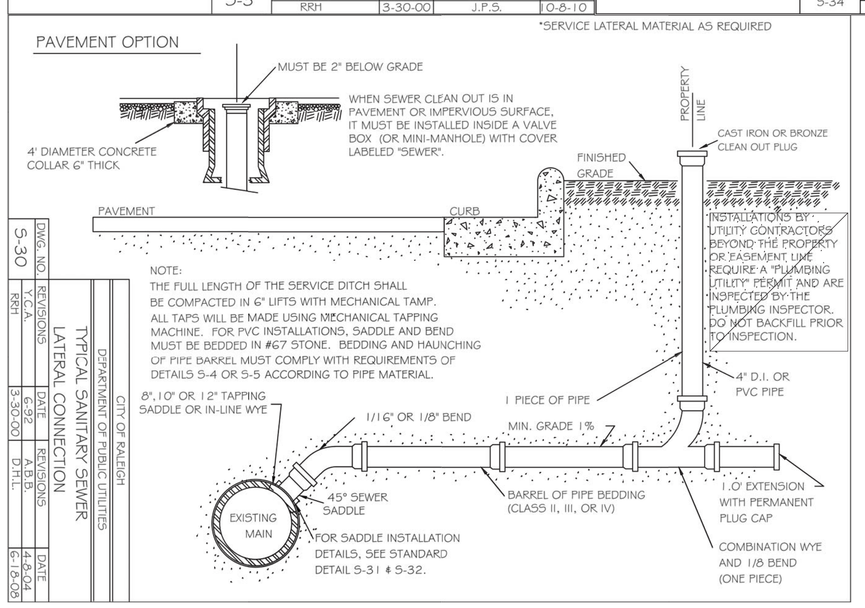

CITY OF RALEIGH				
DEPARTMENT OF PUBLIC UTILITIES				
TYPICAL SANITARY SEWER LATERAL CONNECTION				
DWG. NO.	REVISIONS	DATE	REVISIONS	DATE
S-30	KWT	6-09-06	A.B.B.	4-8-04
	Y.C.A.	6-29-06	D.H.L.	6-30-06

Public
Sewer Collection / Extension System
The City of Raleigh consents to the connection and extension of the City's public sewer system as shown on this plan. The material and Construction methods used for this project shall conform to the standards and specifications of the City's Public Utilities Handbook.

City of Raleigh
Public Utilities Department Permit # _____

Authorization to Construct _____

Date _____

Private
Sewer Collection / Extension System
The City of Raleigh consents to the connection to its public sewer system and extension of the private sewer collection system as shown on this plan. The material and constructions methods used for this project shall conform to the standards and specifications of the City's Public Utilities Handbook.

City of Raleigh
Public Utilities Department Permit # _____

Authorization to Construct Cydney S. Terry

Date _____

Digitally signed by Cydney S. Terry
DN: cn=Cydney S. Terry, o=Kimley-Horn, ou=Engineering, email=cydney.terry@kimley-horn.com, c=US
Date: 2024.04.17 10:52:20-04'00'

a. **Town Certification.** This design has been reviewed by the Engineer for the Town of Knightdale, and to the best of my knowledge and belief, it conforms to the requirements established in the Standard Specifications of the Town of Knightdale.

By: Samuel A. MacDonald Date: _____
Town Engineer

These plans are approved by the Town of Knightdale and serve as construction plans for this project.

By: Kevin Lewis Date: _____
Administrator

1

No.	REVISIONS	DATE	BY
2	REVISED PER TOK COMMENTS	01/12/24	DPM
1	REVISED PER TOK COMMENTS	9/12/23	ASA

Kimley»Horn
© 2023 KIMLEY-HORN AND ASSOCIATES, INC.
421 FAYETTEVILLE STREET, SUITE 600, RALEIGH, NC 27601
PHONE: 919-677-2000 FAX: 919-677-2050
WWW.KIMLEY-HORN.COM
#F-0102

NORTH CAROLINA PROFESSIONAL ENGINEER SEAL 052434 TIMOTHY R. CARTER
4/25/2024

KHA PROJECT 017254013
DATE 06/26/2023
SCALE AS SHOWN
DESIGNED BY KEJ
DRAWN BY KEJ
CHECKED BY COB

UTILITY DETAILS

DEWITT KNIGHTDALE

PREPARED FOR WIDEWATERS

TOWN OF KNIGHTDALE NORTH CAROLINA

SHEET NUMBER
C8.1

Plotted By: Barnes, Michael Sheet Set: DeWitt Knightdale Layout: C8.1 UTILITY DETAILS January 26, 2024 11:51:58am K:\RAL_LDEV\017254013_DeWitt Knightdale\Planning Phase\15-CAD Files\Plan Sheets\C8.1 UTILITY DETAILS.dwg
This document, together with the concepts and designs presented herein, as an instrument of service, is intended only for the specific purpose and client for which it was prepared. Reuse of and improper reliance on this document without written authorization and adaptation by Kimley-Horn and Associates, Inc. shall be without liability to Kimley-Horn and Associates, Inc.

Town of Knightdale Required ESC Plan Maintenance Notes

Insert the following text block on to the first erosion and sediment control device detail sheets.

1. Provide a plan detail, construction specifications, and specific maintenance requirements for all proposed sediment and erosion control structures included on the plan. Recommend placing maintenance requirements with the associated construction detail.
2. Maintenance and/or clean out, is necessary anytime the device is at 50% capacity. All sediment storage measures will remain on site and functional until all grading and final landscaping of the project is complete.
3. As designated by NCDEQ NCG01 permitting, self-inspections for erosion and sedimentation control measures are to be performed at least once every seven calendar days and within 24 hours of every rain event of 1 inch or greater. Any needed repairs shall be made immediately to maintain measures as designed.
4. Provide the minimum maintenance standards as specified below:

SURVEYOR FLAGS/TAPE/STAKES:
- Replace identifiers if damaged or knocked down during development.
- Ensure key environmental and/or cultural resources maintain identifiers.
- Colors should adhere to the APWA Uniform Color Code. Use accepted survey symbols and ensure operators understand designations. Utility line owners/operators shall identify the designating firm.

PERMITS/NCGO1 INSPECTIONS BOX:
- Confirm box is securely fashions to a post or wall in a visible location in proximity to the construction entrance.
- Maintain relevant identification on the exterior of the box.
- Ensure paper documents remain dry / legible (lamination, ticket holders, binders, etc.)
- Replace any missing documents immediately. Consider placing ties or fasteners if necessary.

RAIN GUAGE:
- Check and remove any items from the rain funnel and the debris filter (e.g., dust, bugs and other debris).
- Open the rain gauge and remove any foreign objects.
- Perform routine maintenance as specified by the manufacturer.
- Check that the gauge is not being obstructed from rain capture and is level before and after reassembly.

TREE PROTECTION FENCE:
- Prune any damaged trees. (If) damage to protected trees occurs, repair any damage to the crown, trunk, or root system immediately.
- Repair roots by cutting off the damaged areas and painting them with tree paint. Spread peat moss or moist topsoil over exposed roots.
- Repair damage to bark by trimming around the damaged area, taper the cut to provide drainage and paint with tree paint.
- Cut off all damaged tree limbs above the tree collar at the trunk or main branch. Use three separate cuts to avoid peeling bark from healthy areas of the tree.

SILT FENCE:
- Should the fabric of a sediment fence collapse, tear, decompose, or become ineffective, replace it promptly.
- Remove sediment deposits as necessary to provide adequate storage volume for the next rain and reduce pressure on the fence. Take care to avoid undermining the fence during cleanouts.
- Remove all fencing materials and unstable sediment deposits and bring the area to grade and stabilize it after the contributing drainage area has been properly stabilized.

SILT FENCE OUTLET:
- Freshen stone when sediment accumulation exceeds 6 inches.
- Keep mesh free of debris to provide adequate flow and replace stone as needed to facilitate de-watering.

CONSTRUCTION ENTRANCE:
- Maintain the gravel pad in a condition to prevent mud or sediment from leaving the construction site. This may require periodic topdressing with 2-inch stone.
- Immediately remove all objectionable materials spilled, washed, or tracked onto public roadways.

SKIMMER:
- Confirm skimmer is functional, installed in the correct orientation and has mobility to float on top of the water column.
- Ensure rock pad stabilization is present under the skimmer.
- Repair any structural deficiencies (e.g., orifice disk, flex hose connection, vent functioning, cracked PVC)

SEDIMENT BASIN
- Basin requires maintenance when the inlet zone (1st quadrant) has been filled with sediment.
- Baffle material shall be maintained in good condition for the life of the pond until removal or conversion.

SEDIMENT BASIN / ROLLED EROSION CONTROL PRODUCT:
- Inspect initial channel anchoring has been installed correctly, confirm segments are rolled in correct orientation.
- Any areas that are damaged or not in close contact with the ground shall be repaired and stapled.
- Monitor and repair the RECP as necessary until ground cover is established.

BASIN CONVEYANCES / SLOPE DRAIN / RIP-RAP LINED CHANEL
- Any erosion of the slope, berm or outlet should be repaired immediately to prevent head cutting back into the slope.
- Conveyance should be refreshed if pore space has been compromised. Clogged drains should be flushed out or replaced.
- Additional performance measure may be required at conveyance entrance to slow water entering the basin.

FILTER BAG / DEWATERING ACTIVITIES
- Ensure the dewatering pad is in a good stabilized condition.
- Prior to use inspect bags for any defects. Ensure pump hoe is secure and a floating intake is being used (when possible).
- Follow all manufacturer recommendations for inspection and maintenance guidelines. Replace when trapped sediment has accumulated to 50% of the bag capacity or in accordance with the manufacturer's recommendations.

TEMPORARY DIVERSION DITCHES / ROLLED EROSION CONTROL PRODUCT:
- Any areas that are damaged or not in close contact with the ground shall be repaired and stapled.
- Monitor and repair the RECP as necessary until ground cover is established.

WITH WATTLES / SILT SOCKS
- Remove sediment accumulation behind measure as necessary to prevent damage to channel vegetation.
- Replace wattle/sock if clogged or torn. Reinstall per detail if damaged or dislodged.
- If ponding becomes excessive, replace with a larger diameter wattle/sock or a different measure.

WITH CHECK DAMS
- Remove sediment accumulation behind measure as necessary to prevent damage to channel vegetation.
- Check for erosion, piping, rock displacement, and correct stone sizes. Repair immediately.
- Confirm weir present and located at the center of the device.

INLET PROTECTIONS (PIPE / YARD / DROP / CURB)
- Inspect inlet protection and remove sediment after each rain event.
- Keep free of debris to provide adequate flow and if present replace stone as needed to facilitate de-watering.

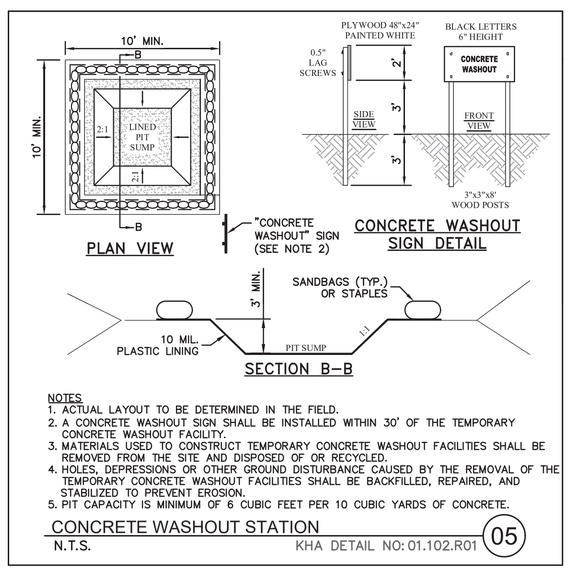

PLAN VIEW — CONCRETE WASHOUT SIGN DETAIL — SECTION B–B

NOTES
1. ACTUAL LAYOUT TO BE DETERMINED IN THE FIELD.
2. A CONCRETE WASHOUT SIGN SHALL BE INSTALLED WITHIN 30' OF THE TEMPORARY CONCRETE WASHOUT FACILITY.
3. MATERIALS USED TO CONSTRUCT TEMPORARY CONCRETE WASHOUT FACILITIES SHALL BE REMOVED FROM THE SITE AND DISPOSED OF OR RECYCLED.
4. HOLES, DEPRESSIONS OR OTHER GROUND DISTURBANCE CAUSED BY THE REMOVAL OF THE TEMPORARY CONCRETE WASHOUT FACILITIES SHALL BE BACKFILLED, REPAIRED, AND STABILIZED TO PREVENT EROSION.
5. PIT CAPACITY IS MINIMUM OF 6 CUBIC FEET PER 10 CUBIC YARDS OF CONCRETE.

CONCRETE WASHOUT STATION — 05
N.T.S. KHA DETAIL NO: 01.102.R01

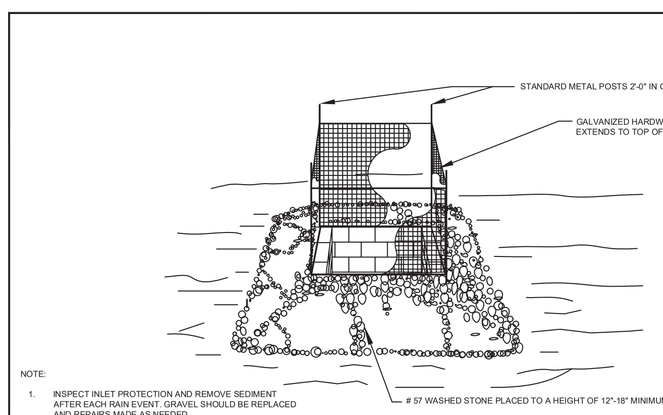

NOTE:
1. INSPECT INLET PROTECTION AND REMOVE SEDIMENT AFTER EACH RAIN EVENT. GRAVEL SHOULD BE REPLACED AND REPAIRS MADE AS NEEDED.

STANDARD GRAVEL YARD INLET PROTECTION

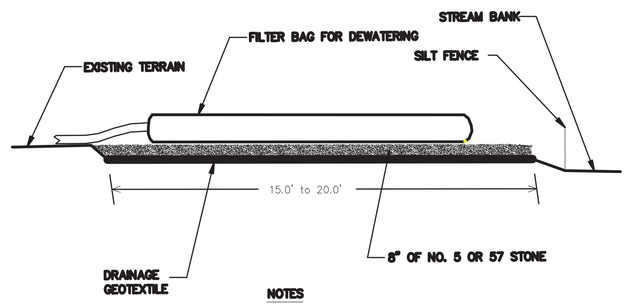

NOTES
PROVIDE STABILIZED OUTLET TO STREAM BANK. WOOD PALLETS MAY BE USED IN LIEU OF STONE AND GEOTEXTILE AS DIRECTED. A SUFFICIENT NUMBER OF PALLETS MUST BE PROVIDED TO ELEVATE THE ENTIRE FILTER BAG FOR DEWATERING ABOVE NATURAL GROUND.

NOT TO SCALE

STANDARD FILTER BAG FOR DEWATERING ACTIVITIES

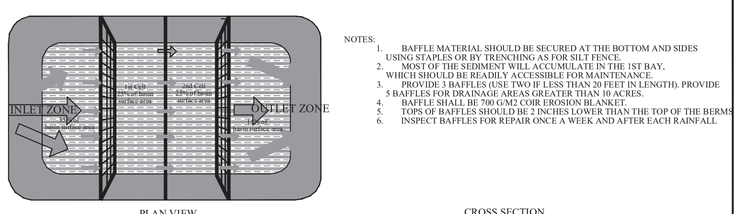

PLAN VIEW

NOTES:
1. BAFFLE MATERIAL SHOULD BE SECURED AT THE BOTTOM AND SIDES USING STAPLES OR BY TRENCHING AS FOR SILT FENCE.
2. MOST OF THE SEDIMENT WILL ACCUMULATE IN THE 1ST BAY, WHICH SHOULD BE READILY ACCESSIBLE FOR MAINTENANCE.
3. PROVIDE 3 BAFFLES (USE TWO IF LESS THAN 20 FEET IN LENGTH). PROVIDE 5 BAFFLES FOR DRAINAGE AREAS GREATER THAN 10 ACRES.
4. BAFFLE SHALL BE 700 GMO CORE EROSION BLANKET.
5. TOPS OF BAFFLES SHOULD BE 2 INCHES LOWER THAN THE TOP OF THE BERMS
6. INSPECT BAFFLES FOR REPAIR ONCE A WEEK AND AFTER EACH RAINFALL

CROSS SECTION

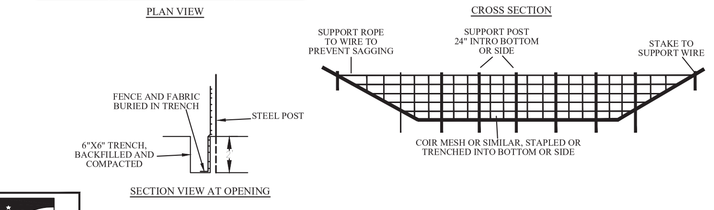

SECTION VIEW AT OPENING

STANDARD BAFFLES DETAIL

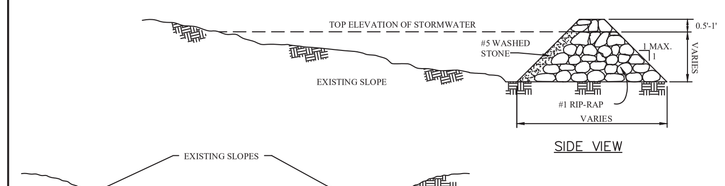

CONSTRUCTION NOTES:
HEIGHT & WIDTH DETERMINED BY EXISTING TOPOGRAPHY AND SEDIMENT STORAGE REQUIRED.
KEY RIP RAP INTO THE DAM FOR STABILIZATION.

NOTE: REMOVE SEDIMENT ACCUMULATION FROM BEHIND CHECK DAMS TO PREVENT DAMAGE TO CHANNEL VEGETATION. FLOW SHOULD BE MAINTAINED THROUGH THE DAM.

STANDARD CHECK DAM

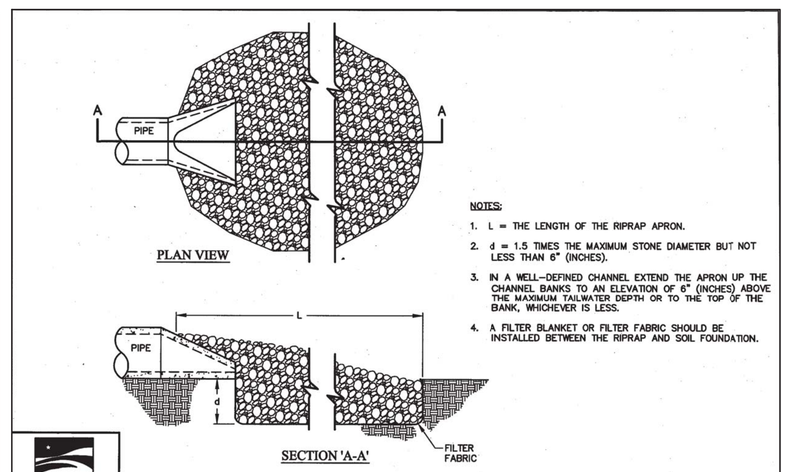

NOTES:
1. L = THE LENGTH OF THE RIPRAP APRON.
2. d = 1.5 TIMES THE MAXIMUM STONE DIAMETER BUT NOT LESS THAN 6" (INCHES).
3. IN A WELL-DEFINED CHANNEL EXTEND THE APRON UP THE CHANNEL BANKS TO AN ELEVATION OF 6" (INCHES) ABOVE THE MAXIMUM TAILWATER DEPTH OR TO THE TOP OF THE BANK, WHICHEVER IS LESS.
4. A FILTER BLANKET OR FILTER FABRIC SHOULD BE INSTALLED BETWEEN THE RIPRAP AND SOIL FOUNDATION.

STANDARD PIPE OUTLET TO WELL-DEFINED CHANNEL

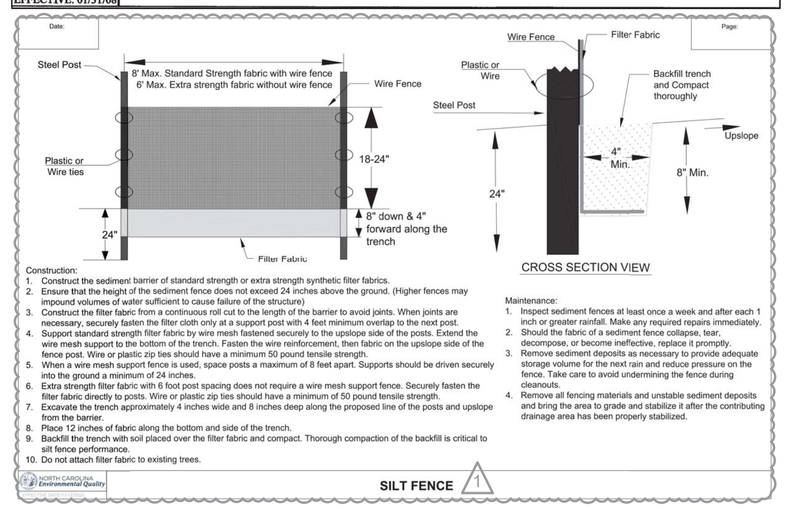

Construction:
1. Construct the sediment barrier of standard strength or extra strength synthetic filter fabrics.
2. Ensure that the height of the sediment fence does not exceed 24 inches above the ground. (Higher fences may impound volumes of water sufficient to cause failure of the structure)
3. Construct the filter fabric from a continuous roll cut to the length of the barrier to avoid joints. When joints are necessary, securely fasten the filter cloth only at a support post with 4 feet minimum overlap to the next post.
4. Support standard strength filter fabric by wire mesh fastened securely to the upslope side of the posts. Extend the wire mesh support to the bottom of the trench. Fasten the wire reinforcement, then fabric on the upslope side of the fence post. Wire or plastic zip ties should have a minimum 50 pound tensile strength.
5. When a wire mesh support fence is used, space posts a maximum of 8 feet apart. Supports should be driven securely into the ground a minimum of 24 inches.
6. Extra strength filter fabric with 6 foot post spacing does not require a wire mesh support fence. Securely fasten the filter fabric directly to posts. Wire or plastic zip ties should have a minimum of 50 pound tensile strength.
7. Excavate the trench approximately 4 inches wide and 8 inches deep along the proposed line of the posts and upslope from the barrier.
8. Place 12 inches of fabric along the bottom and side of the trench.
9. Backfill the trench with soil placed over the filter fabric and compact. Thorough compaction of the backfill is critical to silt fence performance.
10. Do not attach filter fabric to existing trees.

Maintenance:
1. Inspect sediment fences at least once a week and after each 1 inch or greater rainfall. Make any required repairs immediately.
2. Should the fabric of a sediment fence collapse, tear, decompose, or become ineffective, replace it promptly.
3. Remove sediment deposits as necessary to provide adequate storage volume for the next rain and reduce pressure on the fence. Take care to avoid undermining the fence during cleanouts.
4. Remove all fencing materials and unstable sediment deposits and bring the area to grade and stabilize it after the contributing drainage area has been properly stabilized.

SILT FENCE 1

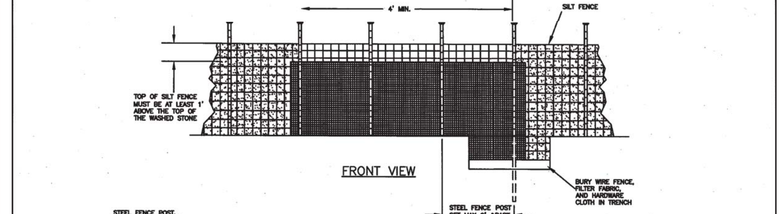

NOTES:
1. REMOVE SEDIMENT WHEN HALF OF STONE OUTLET IS COVERED.
2. REPLACE STONE AS NEEDED TO ENSURE DEWATERING.

STANDARD SILT FENCE OUTLET

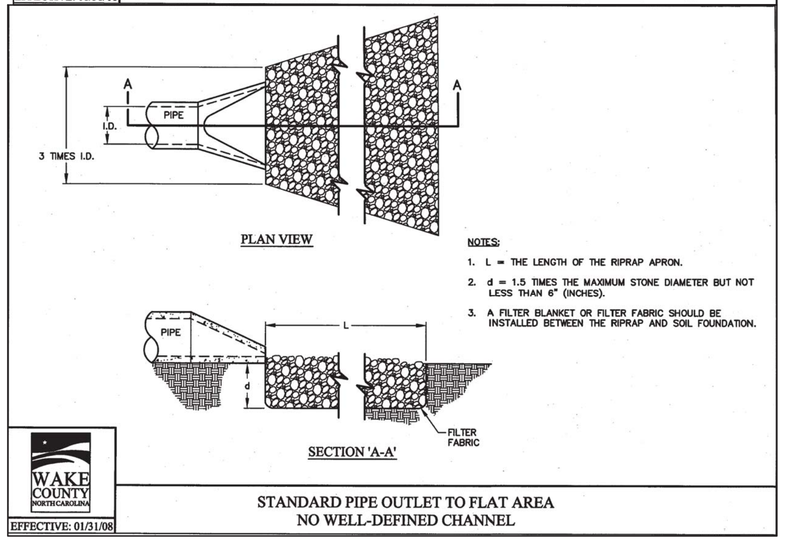

NOTES:
1. L = THE LENGTH OF THE RIPRAP APRON.
2. d = 1.5 TIMES THE MAXIMUM STONE DIAMETER BUT NOT LESS THAN 6" (INCHES).
3. A FILTER BLANKET OR FILTER FABRIC SHOULD BE INSTALLED BETWEEN THE RIPRAP AND SOIL FOUNDATION.

STANDARD PIPE OUTLET TO FLAT AREA NO WELL-DEFINED CHANNEL

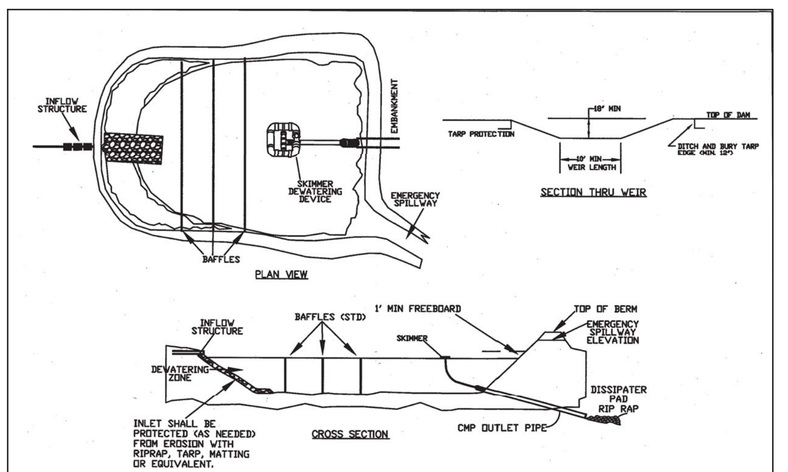

INLET SHALL BE PROTECTED (AS NEEDED) FROM EROSION WITH RIPRAP, TARP, MATTING OR EQUIVALENT.

NOTES:
1) BASIN SHOULD BE CLEANED OUT WHEN CAPACITY REACHES AN ELEVATION REPRESENTING THAT THE BASIN IS HALF-FULL
2) THE TARP USED TO PROTECT THE WEIR SHALL BE THE WIDTH SPECIFIED. THE LENGTH OF THE TARP SHALL BE ACCORDING TO AVAILABLE SUPPLY. IF MULTIPLE TARPS ARE TO BE USED, THEN TARPS SHALL BE OVERLAPPED AT LEAST 12". THE UPSTREAM 12" TARP SHALL OVERLAP THE DOWNSTREAM TARP. THE TARP SHALL BE SO MIL. HEAVY DUTY SILVER TARPAULINS OR EQUIVALENT. NO RECYCLED TARPS.
3) PROVIDE A MINIMUM OF 3 INTERNAL BAFFLES TO EVENLY DISTRIBUTE FLOW ACROSS THE BASIN, REDUCING TURBULENCE.
4) BAFFLE MATERIAL MUST BE SECURED AT THE BOTTOM AND SIDES USING STAPLES OR BY TRENCHING (DO NOT TRENCH).
5) MOST OF THE SEDIMENT WILL ACCUMULATE IN THE FIRST BAY, SO THIS SHOULD BE READILY AVAILABLE FOR MAINTENANCE.
6) DURING THE CONSTRUCTION PHASE OF THE PROJECT, PERMANENT STORMWATER RISER SHALL ONLY DEWATER FROM THE TOP OF PIPE.
7) POND SHALL NOT BE CONVERTED FOR STORMWATER USE UNTIL APPROVED BY ENVIRONMENTAL ENGINEER.

STANDARD SKIMMER BASIN

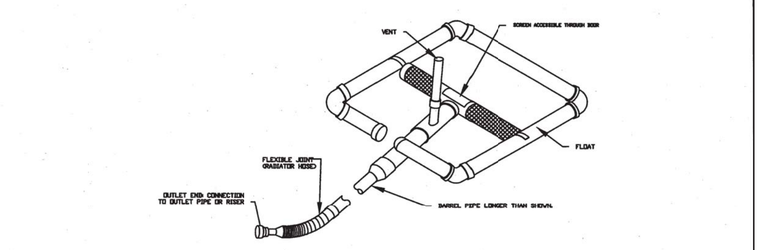

STANDARD SKIMMER DETAIL

NOTES:
1. CONSTRUCT THE ENTRANCE TO THE SLOPE DRAIN OF A STANDARD FLARED-END SECTION OF PIPE WITH A MINIMUM 2-INCH VERTICAL TOE WALL. CROSS-SECTIONAL AREA WITH A 12-INCH DIAMETER PIPE. STANDARD T-SECTION FITTING MAY ALSO BE USED AT THE INLET.
2. USE AN EARTHEN DIVERSION TO DIRECT SURFACE RUNOFF INTO THE TEMPORARY SLOPE DRAIN. MAKE THE HEIGHT OF THE BERM OVER THE PIPE IN CONDUIT A MINIMUM OF 1.5 FT AND AT LEAST 6 INCHES HIGHER THAN THE ADJACENT BERMS ON EITHER SIDE. THE LOWEST POINT OF THE DIVERSION BERM SHOULD BE A MINIMUM OF 1 FT ABOVE THE TOP OF THE DRAIN SO THAT DESIGN FLOW CAN FREELY ENTER THE PIPE.
3. PROTECT THE OUTLET OF THE SLOPE DRAIN FROM EROSION WITH RIPRAP DISSIPATOR.

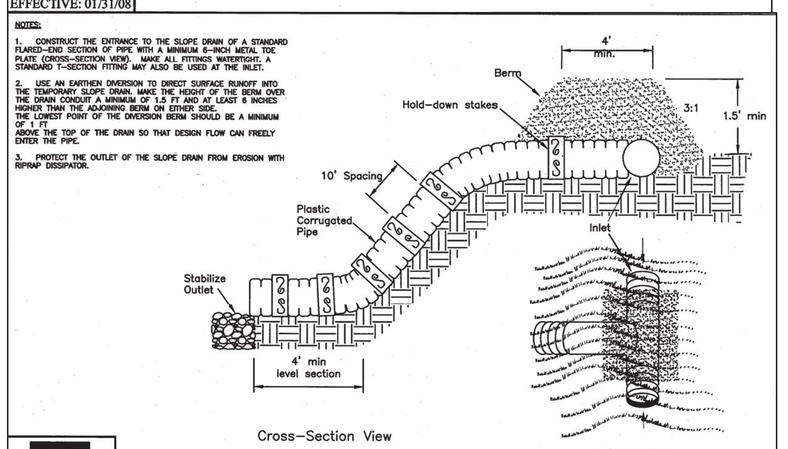

STANDARD TEMPORARY SLOPE DRAIN

a. **Town Certification.** This design has been reviewed by the Engineer for the Town of Knightdale, and to the best of my knowledge and belief, it conforms to the requirements established in the Standard Specifications of the Town of Knightdale.

By: Samuel A. MacDonald Date: _____
Town Engineer

These plans are approved by the Town of Knightdale and serve as construction plans for this project.

By: Kevin Lewis Date: _____
Administrator

1

No.	REVISIONS	DATE	BY
2	REVISED PER TOK COMMENTS	01/12/24	DPM
1	REVISED PER TOK COMMENTS	9/12/23	ASA

Kimley»Horn
© 2023 KIMLEY-HORN AND ASSOCIATES, INC.
421 FAYETTEVILLE STREET, SUITE 600, RALEIGH, NC 27601
PHONE: 919-677-2000 FAX: 919-677-2050
WWW.KIMLEY-HORN.COM

NORTH CAROLINA PROFESSIONAL ENGINEER SEAL 052434 TIMOTHY R. CARTER
4/25/2024

KHA PROJECT	017254013
DATE	06/26/2023
SCALE	AS SHOWN
DESIGNED BY	KEJ
DRAWN BY	KEJ
CHECKED BY	COB

EROSION CONTROL DETAILS

DEWITT KNIGHTDALE

PREPARED FOR WIDEWATERS

TOWN OF KNIGHTDALE NORTH CAROLINA

SHEET NUMBER
C9.0

Plotted By: Barnes, Michael Sheet Set: DeWitt Knightdale Layout: C9.0 EROSION CONTROL DETAILS January 26, 2024 11:52:06am K:\RAL_LDEV\017254013_DeWitt Knightdale\Planning Phase\15_CAD Files\PlanSheets\C9.0 EROSION CONTROL DETAILS.dwg
This document, together with the concepts and designs presented herein, as an instrument of service, is intended only for the specific purpose and client for which it was prepared. Reuse of and improper reliance on this document without written authorization and adaptation by Kimley-Horn and Associates, Inc. shall be without liability to Kimley-Horn and Associates, Inc.

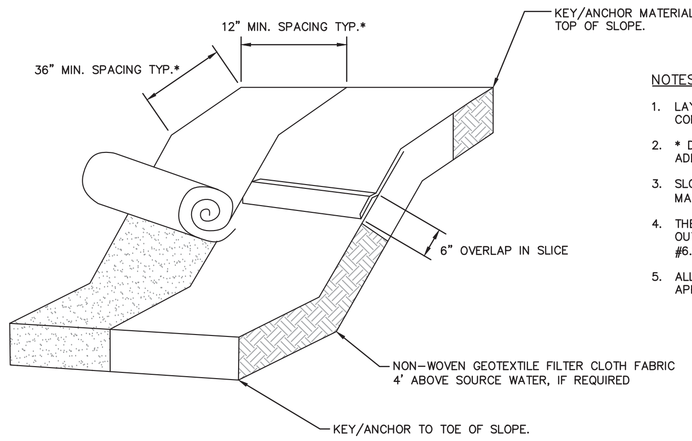

NOTES:

1. LAY BLANKETS LOOSELY AND STAKE OR STAPLE TO MAINTAIN DIRECT CONTACT WITH THE SOIL. DO NOT STRETCH.
2. * DIMENSIONS SHOWN ARE MINIMUM. MANUFACTURED PRODUCTS MAY HAVE ADDITIONAL REQUIREMENTS THAT MUST BE MET.
3. SLOPE SURFACE SHALL BE FREE OF ROCKS, SOIL CLODS, STICKS, GRASS. MAT/BLANKETS SHALL HAVE GOOD SOIL CONTACT.
4. THE DETAIL SHOWN IS FOR SLOPE MATTING. FOR CHANNEL OR PIPE OUTFALL MATTING SPECIFICATIONS, PLEASE REFER TO NCESCPDM STANDARD #6.17 AND MANUFACTURER'S GUIDELINES.
5. ALL MATTING TO BE ERONET™ S150® EROSION CONTROL BLANKET OR APPROVED EQUIVALENT.

TEMPORARY MATTING
N.T.S.
KHA DETAIL NO: 01.107.R01 (1)

NOTES:

1. TEMPORARY DIVERSION DITCH TO BE USED TO INTERCEPT FLOW AND/OR DIVERT TO A SEDIMENT CONTROL MEASURE OR BMP.
2. STABILIZE DIVERSION DITCH BERM WITH TEMPORARY SEEDING, MULCH WITH TAC, AND/OR EROSION CONTROL NETTING.

MAINTENANCE NOTES:

1. INSPECT ONCE A WEEK AND AFTER EVERY 1" RAINFALL.
2. SILT SHALL BE REMOVED WHEN DITCH IS ONE-HALF FULL.
3. DITCH SHALL BE RECONSTRUCTED WHEN DAMAGED BY EQUIPMENT OR COVERED BY FILL.
4. CHECK OUTLETS AND MAKE TIMELY REPAIRS AS NEEDED.
5. AFTER DRAINAGE AREA IS PERMANENTLY STABILIZED, PLACE WASTE MATERIAL IN DITCH TO BLEND WITH NATURAL GROUND AND STABILIZE.

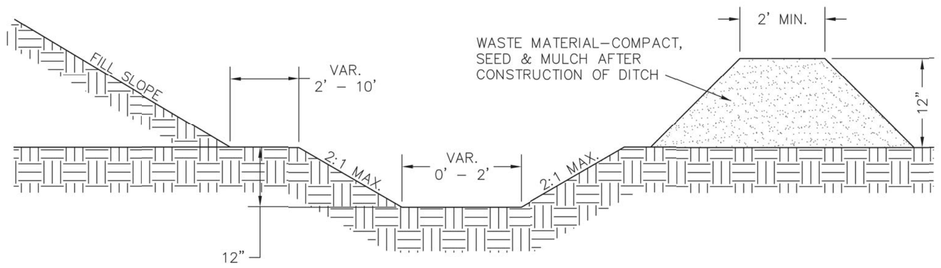

CROSS SECTIONAL VIEW

WAKE COUNTY NORTH CAROLINA
EFFECTIVE: 01/31/08

STANDARD TEMPORARY DIVERSION DITCH

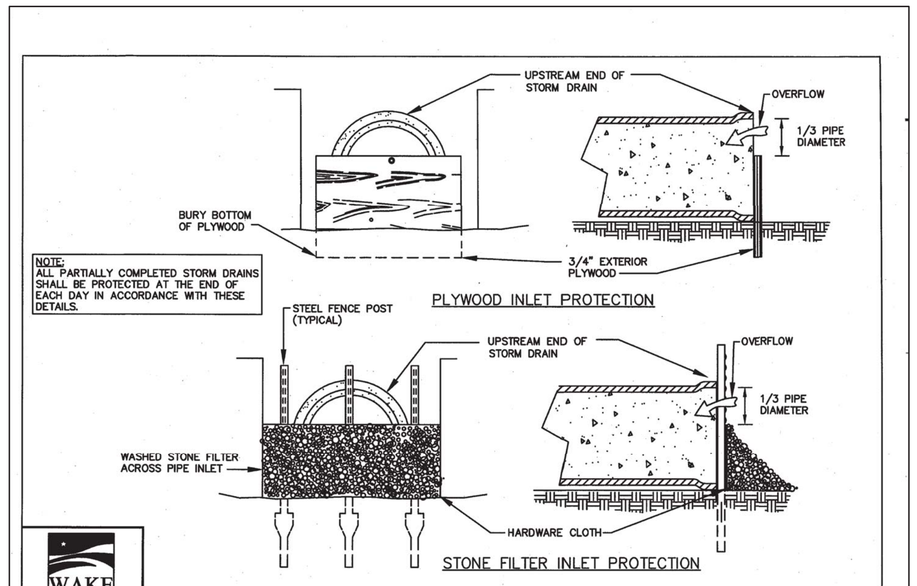

WAKE COUNTY NORTH CAROLINA
EFFECTIVE: 01/31/08

STANDARD PIPE INLET PROTECTION (PLYWOOD & STONE)

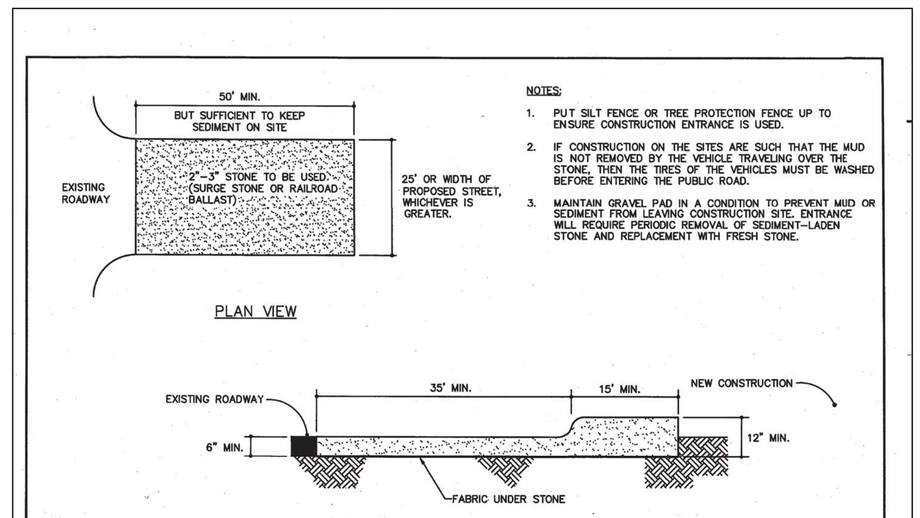

NOTES:

1. PUT SILT FENCE OR TREE PROTECTION FENCE UP TO ENSURE CONSTRUCTION ENTRANCE IS USED.
2. IF CONSTRUCTION ON THE SITES ARE SUCH THAT THE MUD IS NOT REMOVED BY THE VEHICLE TRAVELING OVER THE STONE, THEN THE TIRES OF THE VEHICLES MUST BE WASHED BEFORE ENTERING THE PUBLIC ROAD.
3. MAINTAIN GRAVEL PAD IN A CONDITION TO PREVENT MUD OR SEDIMENT FROM LEAVING CONSTRUCTION SITE. ENTRANCE WILL REQUIRE PERIODIC REMOVAL OF SEDIMENT-LADEN STONE AND REPLACEMENT WITH FRESH STONE.

WAKE COUNTY NORTH CAROLINA
EFFECTIVE: 01/31/08

STANDARD CONSTRUCTION ENTRANCE

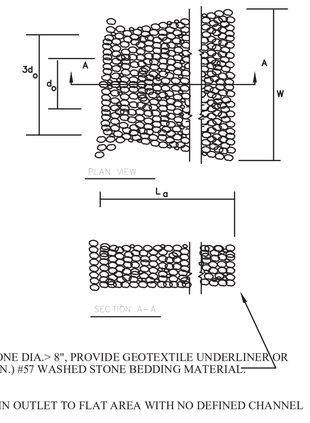

MAINTENANCE

1. INSPECT AT REGULAR INTERVALS AS WELL AS MAJOR RAINS FOR SLOPE DRAINS, SCOUR HOLES, AND/OR DISLODGED STONES AND MAKE NECESSARY REPAIRS IMMEDIATELY.
2. BEFORE REMOVAL OF SEDIMENT/SILT FENCING, INSPECT STONES AND AREA SURROUNDING STONES FROM ACCUMULATED SEDIMENT. REMOVE ACCUMULATED SEDIMENT AFTER DRAINAGE BASIN STABILIZATION AND PRIOR TO REMOVAL OF SEDIMENT/SILT FENCING.

(1) d = 1.5 TIMES THE MAXIMUM STONE DIAMETER BUT NOT LESS THAN 6

(2) La =LENGTH OF RIPRAP APRON.

(3) EXTEND RIP RAP OVER AND AROUND SLOPE DRAIN

REVISIONS

DATE	DESCRIPTION

RIPRAP FOR SLOPE DRAIN
STD. # STD
INCHES.

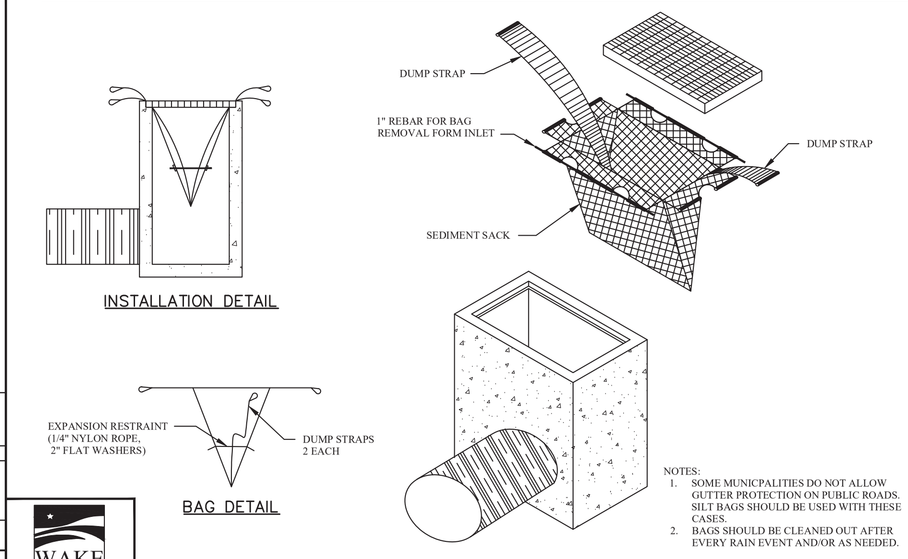

NOTES:
1. SOME MUNICIPALITIES DO NOT ALLOW GUTTER PROTECTION ON PUBLIC ROADS. SILT BAGS SHOULD BE USED WITH THESE CASES.
2. BAGS SHOULD BE CLEANED OUT AFTER EVERY RAIN EVENT AND/OR AS NEEDED.

WAKE COUNTY NORTH CAROLINA
EFFECTIVE: 01/31/08

STANDARD SILT BAG - INLET SEDIMENT CONTROL DEVICE

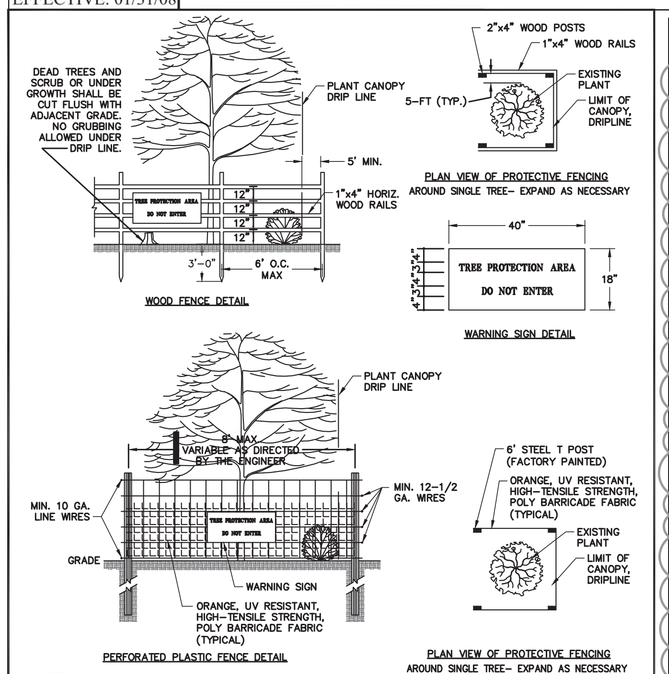

NOTES:
1. REMOVE ALL BARRIERS UPON COMPLETION OF PROJECT.
2. LANDSCAPING PLANS SHALL SHOW LOCATIONS OF ALL TREE PROTECTION FENCES.
3. ALL PLANTS TO BE SAVED SHALL BE PROTECTED BY FENCING AS SHOWN IN THIS DETAIL.
4. CONTRACTOR SHALL INSTALL FENCING PRIOR TO BEGINNING ANY CONSTRUCTION OR GRADING ACTIVITY.
5. CONTRACTOR SHALL CALL FOR INSPECTION AND APPROVAL OF PROTECTIVE FENCING PRIOR TO BEGINNING ANY CONSTRUCTION OR GRADING.
6. PROTECTIVE FENCING SHALL BE LOCATED 5' OUTSIDE DRIPLINE OF TREES AND 1' MINIMUM OUTSIDE SHRUBS OR OTHER PLANTS.

REVISIONS

DATE	DESCRIPTION

TOWN OF KNIGHTDALE STANDARD DETAILS	PLANT PROTECTIVE FENCING	STD. NO. 2.10

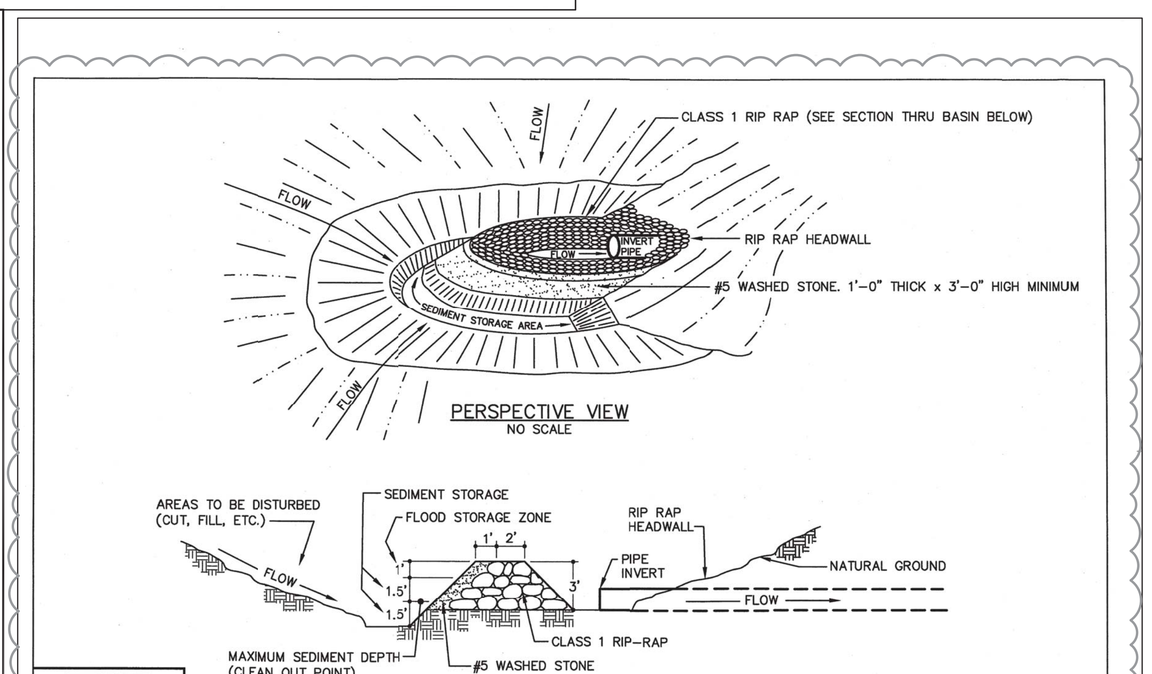

SECTION THRU CATCH BASIN, FILTER AND CULVERT PIPE
NO SCALE

WAKE COUNTY NORTH CAROLINA
EFFECTIVE: 01/31/08

STANDARD HORSESHOE INLET PROTECTION

SEEDBED PREPARATION

1.) CHISEL COMPACTED AREAS AND SPREAD TOPSOIL 3 INCHES DEEP OVER ADVERSE SOIL CONDITIONS, IF AVAILABLE.
2.) RIP THE ENTIRE AREA TO 6 INCHES DEPTH.
3.) REMOVE ALL LOOSE ROCK, ROOTS, AND OTHER OBSTRUCTIONS LEAVING SURFACE REASONABLY SMOOTH AND UNIFORM.
4.) APPLY AGRICULTURAL LIME, FERTILIZER, AND SUPERPHOSPHATE UNIFORMLY AND MIX WITH SOIL (SEE BELOW*).
5.) CONTINUE TILLAGE UNTIL A WELL-PULVERIZED, FIRM REASONABLY UNIFORM SEEDBED IS PREPARED 4 TO 6 INCHES DEEP.
6.) SEED ON A FRESHLY PREPARED SEEDBED AND COVER SEED LIGHTLY WITH SEEDING EQUIPMENT OR CULTIPACK AFTER SEEDING.
7.) MULCH IMMEDIATELY AFTER SEEDING AND ANCHOR MULCH.
8.) INSPECT ALL SEEDED AREAS AND MAKE NECESSARY REPAIRS OR RESEEDINGS WITHIN THE PLANTING SEASON, IF POSSIBLE. IF STAND SHOULD BE OVER 60% DAMAGED, REESTABLISH FOLLOWING ORIGINAL LIME, FERTILIZER AND SEEDING RATES.
9.) CONSULT CONSERVATION INSPECTOR ON MAINTENANCE TREATMENT AND FERTILIZATION AFTER PERMANENT COVER IS ESTABLISHED.

* APPLY: AGRICULTURAL LIMESTONE – 2 TONS/ ACRES (3 TONS/ ACRE IN CLAY SOILS)
FERTILIZER – 1,000 lbs. / ACRE –10–10–10
SUPERPHOSPHATE– 500 lbs> / ACRE –20% ANALYSIS
MULCH –2 TONS / ACRE – SMALL GRAIN STRAW
ANCHOR – ASPHALT EMULSION @ 300 GALS./ ACRE

SEEDING SCHEDULE (REVISED: 1-1-86)

Shoulders, Side Ditches, Slopes (Max 3:1)

DATE	TYPE	PLANTING RATE
Aug 15 – Nov 1	Tall Fescue	300 lbs/acre
Nov 1 – Mar 1	Tall Fescue & Abruzzi Rye	300 lbs/acre 25 lbs/acre
Mar 1 – Apr 15	Tall Fescue	300 lbs/acre
Apr 15 – Jun 30	Hulled Common Bermudagrass	25 lbs/acre
Jul 1 – Aug 15	Tall Fescue and ***Browntop Millet ***or Sorghum-Sudan Hybrids	120 lbs/acre 35 lbs/acre 30 lbs/acre
Mar 1 – Jun 1	Slopes (3:1 to 2:1) Sericea Lespedeza (scarified) &	50 lbs/acre
(Mar 1 – Apr 15)	Add Tall Fescue	120 lbs/acre
(Mar 1 – Jun 30)	Or Add Weeping Lovegrass	10 lbs/acre
(Mar 1 – Jun 30)	Or Add Hulled Common Bermudagrass	25 lbs/acre
Jun 1 – Sep 1	***Tall Fescue and ***Browntop Millet ***or Sorghum-Sudan Hybrids	120 lbs/acre 35 lbs/acre 30 lbs/acre
Sep 1 – Mar 1	Sericea Lespedeza (unhulled-unscarified) and Tall Fescue	70 lbs/acre 120 lbs/acre
(Nov 1 – Mar 1)	Add Abruzzi Rye	25 lbs/acre

Consult Conservation Engineer or Soil Conservation Service for additional information concerning other alternatives for vegetation of denuded areas. The above vegetation rates are those which do well under local conditions; other seeding rate combinations are possible.
***Temporary – Reseed according to optimum season for desired permanent vegetation. Do not allow temporary cover to grow over 12" in height before mowing, otherwise fescue may be shaded out.

a. **Town Certification.** This design has been reviewed by the Engineer for the Town of Knightdale, and to the best of my knowledge and belief, it conforms to the requirements established in the Standard Specifications of the Town of Knightdale.
By: Samuel A. MacDonald Date: _____
Town Engineer
These plans are approved by the Town of Knightdale and serve as construction plans for this project.
By: Kevin Lewis Date: _____
Administrator

No.	REVISIONS	DATE	BY
2	REVISED PER TOK COMMENTS	01/12/24	DPM
1	REVISED PER TOK COMMENTS	9/12/23	ASA

Kimley»Horn
© 2023 KIMLEY-HORN AND ASSOCIATES, INC.
421 FAYETTEVILLE STREET, SUITE 600, RALEIGH, NC 27601
PHONE: 919-677-2000 FAX: 919-677-2050
WWW.KIMLEY-HORN.COM
#F-0102

NORTH CAROLINA PROFESSIONAL ENGINEER SEAL 052434 TIMOTHY R. CARTER
4/25/2024

KHA PROJECT 017254013
DATE 06/26/2023
SCALE AS SHOWN
DESIGNED BY KEJ
DRAWN BY KEJ
CHECKED BY COB

EROSION CONTROL DETAILS

DEWITT KNIGHTDALE
PREPARED FOR WIDEWATERS
TOWN OF KNIGHTDALE NORTH CAROLINA

SHEET NUMBER C9.1

Plotted By: Barnes, Michael Sheet Set: DeWitt Knightdale Layout: C9.1 EROSION CONTROL DETAILS January 26, 2024 11:52:23am K:\RAL_LDEV\017254013_DeWitt Knightdale\Planning Phase\15-CAD Files\PlanSheets\C9.1 EROSION CONTROL DETAILS.dwg
This document, together with the concepts and designs presented herein, as an instrument of service, is intended only for the specific purpose and client for which it was prepared. Reuse of and improper reliance on this document without written authorization and adaptation by Kimley-Horn and Associates, Inc. shall be without liability to Kimley-Horn and Associates, Inc.

Plotted By: Barnes, Michael Sheet Set: DeWitt Knightdale Layout: C9.2 EROSION CONTROL DETAILS January 26, 2024 11:52:30am K:\RAL_LIEV\017254013_DeWitt Knightdale\Planning Phase\15_CAD Files\PlanSheets\C9.2 EROSION CONTROL DETAILS.dwg
This document, together with the concepts and designs presented herein, as an instrument of service, is intended only for the specific purpose and client for which it was prepared. Reuse of and improper reliance on this document without written authorization and adaptation by Kimley-Horn and Associates, Inc. shall be without liability to Kimley-Horn and Associates, Inc.

PART III
SELF-INSPECTION, RECORDKEEPING AND REPORTING

SECTION A: SELF-INSPECTION

Self-inspections are required during normal business hours in accordance with the table below. When adverse weather or site conditions would cause the safety of the inspection personnel to be in jeopardy, the inspection may be delayed until the next business day on which it is safe to perform the inspection. In addition, when a storm event of equal to or greater than 1.0 inch occurs outside of normal business hours, the self-inspection shall be performed upon the commencement of the next business day. Any time when inspections were delayed shall be noted in the Inspection Record.

Inspect	Frequency (during normal business hours)	Inspection records must include:
(1) Rain gauge maintained in good working order	Daily	Daily rainfall amounts. If no daily rain gauge observations are made during weekend or holiday periods, and no individual day rainfall information is available, record the cumulative rain measurement for those un-attended days (and this will determine if a site inspection is needed). Days on which no rainfall occurred shall be recorded as "zero." The permittee may use another rain-monitoring device approved by the Division.
(2) E&SC Measures	At least once per 7 calendar days and within 24 hours of a rain event ≥ 1.0 inch in 24 hours	1. Identification of the measures inspected, 2. Date and time of the inspection, 3. Name of the person performing the inspection, 4. Indication of whether the measures were operating properly, 5. Description of maintenance needs for the measure, 6. Description, evidence, and date of corrective actions taken.
(3) Stormwater discharge outfalls (SDCs)	At least once per 7 calendar days and within 24 hours of a rain event ≥ 1.0 inch in 24 hours	1. Identification of the discharge outfalls inspected, 2. Date and time of the inspection, 3. Name of the person performing the inspection, 4. Evidence of indicators of stormwater pollution such as oil sheen, floating or suspended solids or discoloration, 5. Indication of visible sediment leaving the site, 6. Description, evidence, and date of corrective actions taken.
(4) Perimeter of site	At least once per 7 calendar days and within 24 hours of a rain event ≥ 1.0 inch in 24 hours	If visible sedimentation is found outside site limits, then a record of the following shall be made: 1. Actions taken to clean up or stabilize the sediment that has left the site limits, 2. Description, evidence, and date of corrective actions taken, and 3. An explanation as to the actions taken to control future releases.
(5) Streams or wetlands onsite or offsite (where accessible)	At least once per 7 calendar days and within 24 hours of a rain event ≥ 1.0 inch in 24 hours	If the stream or wetland has increased visible sedimentation or a stream has visible increased turbidity from the construction activity, then a record of the following shall be made: 1. Description, evidence and date of corrective actions taken, and 2. Records of the required reports to the appropriate Division Regional Office per Part III, Section C, Item (2)(a) of this permit.
(6) Ground stabilization measures	After each phase of grading	1. The phase of grading (installation of perimeter E&SC measures, clearing and grubbing, installation of storm drainage facilities, completion of all land-disturbing activity, construction or redevelopment, permanent ground cover). 2. Documentation that the required ground stabilization measures have been provided within the required timeframe or an assurance that they will be provided as soon as possible.

NOTE: The rain inspection resets the required 7 calendar day inspection requirement.

PART III
SELF-INSPECTION, RECORDKEEPING AND REPORTING

SECTION B: RECORDKEEPING

1. E&SC Plan Documentation

The approved E&SC plan as well as any approved deviation shall be kept on the site. The approved E&SC plan must be kept up-to-date throughout the coverage under this permit. The following items pertaining to the E&SC plan shall be kept on site and available for inspection at all times during normal business hours.

Item to Document	Documentation Requirements
(a) Each E&SC measure has been installed and does not significantly deviate from the locations, dimensions and relative elevations shown on the approved E&SC plan.	Initial and date each E&SC measure on a copy of the approved E&SC plan or complete, date and sign an inspection report that lists each E&SC measure shown on the approved E&SC plan. This documentation is required upon the initial installation of the E&SC measures or if the E&SC measures are modified after initial installation.
(b) A phase of grading has been completed.	Initial and date a copy of the approved E&SC plan or complete, date and sign an inspection report to indicate completion of the construction phase.
(c) Ground cover is located and installed in accordance with the approved E&SC plan.	Initial and date a copy of the approved E&SC plan or complete, date and sign an inspection report to indicate compliance with approved ground cover specifications.
(d) The maintenance and repair requirements for all E&SC measures have been performed.	Complete, date and sign an inspection report.
(e) Corrective actions have been taken to E&SC measures.	Initial and date a copy of the approved E&SC plan or complete, date and sign an inspection report to indicate the completion of the corrective action.

2. Additional Documentation to be Kept on Site

In addition to the E&SC plan documents above, the following items shall be kept on the site and available for inspectors at all times during normal business hours, unless the Division provides a site-specific exemption based on unique site conditions that make this requirement not practical:

(a) This General Permit as well as the Certificate of Coverage, after it is received.

(b) Records of inspections made during the previous twelve months. The permittee shall record the required observations on the Inspection Record Form provided by the Division or a similar inspection form that includes all the required elements. Use of electronically-available records in lieu of the required paper copies will be allowed if shown to provide equal access and utility as the hard-copy records.

3. Documentation to be Retained for Three Years

All data used to complete the e-NOI and all inspection records shall be maintained for a period of three years after project completion and made available upon request. [40 CFR 122.41]

PART III
SELF-INSPECTION, RECORDKEEPING AND REPORTING

SECTION C: REPORTING

1. Occurrences that Must be Reported

Permittees shall report the following occurrences:

(a) Visible sediment deposition in a stream or wetland.

(b) Oil spills if:
- They are 25 gallons or more,
- They are less than 25 gallons but cannot be cleaned up within 24 hours,
- They cause sheen on surface waters (regardless of volume), or
- They are within 100 feet of surface waters (regardless of volume).

(c) Releases of hazardous substances in excess of reportable quantities under Section 311 of the Clean Water Act (Ref: 40 CFR 110.3 and 40 CFR 117.3) or Section 102 of CERCLA (Ref: 40 CFR 302.4) or G.S. 143-215.85.

(d) Anticipated bypasses and unanticipated bypasses.

(e) Noncompliance with the conditions of this permit that may endanger health or the environment.

2. Reporting Timeframes and Other Requirements

After a permittee becomes aware of an occurrence that must be reported, he shall contact the appropriate Division regional office within the timeframes and in accordance with the other requirements listed below. Occurrences outside normal business hours may also be reported to the Department's Environmental Emergency Center personnel at (800) 858-0368.

Occurrence	Reporting Timeframes [After Discovery] and Other Requirements
(a) Visible sediment deposition in a stream or wetland	• ***Within 24 hours***, an oral or electronic notification. • ***Within 7 calendar days***, a report that contains a description of the sediment and actions taken to address the cause of the deposition. Division staff may waive the requirement for a written report on a case-by-case basis. • If the stream is named on the NC 303(d) list as impaired for sediment-related causes, the permittee may be required to perform additional monitoring, inspections or apply more stringent practices if staff determine that additional requirements are needed to assure compliance with the federal or state impaired-waters conditions.
(b) Oil spills and release of hazardous substances per Item 1(a)-(c) above	• ***Within 24 hours***, an oral or electronic notification. The notification shall include information about the date, time, nature, volume and location of the spill or release.
(c) Anticipated bypasses [40 CFR 122.41(m)(3)]	• ***A report at least ten days before the date of the bypass, if possible.*** The report shall include an evaluation of the anticipated quality and effect of the bypass.
(d) Unanticipated bypasses [40 CFR 122.41(m)(3)]	• ***Within 24 hours***, an oral or electronic notification. • ***Within 7 calendar days,*** a report that includes an evaluation of the quality and effect of the bypass.
(e) Noncompliance with the conditions of this permit that may endanger health or the environment [40 CFR 122.41(l)(7)]	• ***Within 24 hours***, an oral or electronic notification. • ***Within 7 calendar days,*** a report that contains a description of the noncompliance, and its causes; the period of noncompliance, including exact dates and times, and if the noncompliance has not been corrected, the anticipated time noncompliance is expected to continue; and steps taken or planned to reduce, eliminate, and prevent reoccurrence of the noncompliance. [40 CFR 122.41(l)(6). • Division staff may waive the requirement for a written report on a case-by-case basis.

NORTH CAROLINA *Environmental Quality*

PART II, SECTION G, ITEM (4)
DRAW DOWN OF SEDIMENT BASINS FOR MAINTENANCE OR CLOSE OUT

Sediment basins and traps that receive runoff from drainage areas of one acre or more shall use outlet structures that withdraw water from the surface when these devices need to be drawn down for maintenance or close out unless this is infeasible. The circumstances in which it is not feasible to withdraw water from the surface shall be rare (for example, times with extended cold weather). Non-surface withdrawals from sediment basins shall be allowed only when all of the following criteria have been met:

(a) The E&SC plan authority has been provided with documentation of the non-surface withdrawal and the specific time periods or conditions in which it will occur. The non-surface withdrawal shall not commence until the E&SC plan authority has approved these items,
(b) The non-surface withdrawal has been reported as an anticipated bypass in accordance with Part III, Section C, Item (2)(c) and (d) of this permit,
(c) Dewatering discharges are treated with controls to minimize discharges of pollutants from stormwater that is removed from the sediment basin. Examples of appropriate controls include properly sited, designed and maintained dewatering tanks, weir tanks, and filtration systems,
(d) Vegetated, upland areas of the sites or a properly designed stone pad is used to the extent feasible at the outlet of the dewatering treatment devices described in Item (c) above,
(e) Velocity dissipation devices such as check dams, sediment traps, and riprap are provided at the discharge points of all dewatering devices, and
(f) Sediment removed from the dewatering treatment devices described in Item (c) above is disposed of in a manner that does not cause deposition of sediment into waters of the United States.

NCG01 SELF-INSPECTION, RECORDKEEPING AND REPORTING

EFFECTIVE: 04/01/19

GROUND STABILIZATION AND MATERIALS HANDLING PRACTICES FOR COMPLIANCE WITH THE NCG01 CONSTRUCTION GENERAL PERMIT

Implementing the details and specifications on this plan sheet will result in the construction activity being considered compliant with the Ground Stabilization and Materials Handling sections of the NCG01 Construction General Permit (Sections E and F, respectively). The permittee shall comply with the Erosion and Sediment Control plan approved by the delegated authority having jurisdiction. All details and specifications shown on this sheet may not apply depending on site conditions and the delegated authority having jurisdiction.

SECTION E: GROUND STABILIZATION

Site Area Description	Required Ground Stabilization Timeframes: Stabilize within this many calendar days after ceasing land disturbance	Timeframe variations
(a) Perimeter dikes, swales, ditches, and perimeter slopes	7	None
(b) High Quality Water (HQW) Zones	7	None
(c) Slopes steeper than 3:1	7	If slopes are 10' or less in length and are not steeper than 2:1, 14 days are allowed
(d) Slopes 3:1 to 4:1	14	-7 days for slopes greater than 50' in length and with slopes steeper than 4:1 -7 days for perimeter dikes, swales, ditches, perimeter slopes and HQW Zones -10 days for Falls Lake Watershed
(e) Areas with slopes flatter than 4:1	14	-7 days for perimeter dikes, swales, ditches, perimeter slopes and HQW Zones -10 days for Falls Lake Watershed unless there is zero slope

Note: After the permanent cessation of construction activities, any areas with temporary ground stabilization shall be converted to permanent ground stabilization as soon as practicable but in no case longer than 90 calendar days after the last land disturbing activity. Temporary ground stabilization shall be maintained in a manner to render the surface stable against accelerated erosion until permanent ground stabilization is achieved.

GROUND STABILIZATION SPECIFICATION

Stabilize the ground sufficiently so that rain will not dislodge the soil. Use one of the techniques in the table below:

Temporary Stabilization	Permanent Stabilization
• Temporary grass seed covered with straw or other mulches and tackifiers • Hydroseeding • Rolled erosion control products with or without temporary grass seed • Appropriately applied straw or other mulch • Plastic sheeting	• Permanent grass seed covered with straw or other mulches and tackifiers • Geotextile fabrics such as permanent soil reinforcement matting • Hydroseeding • Shrubs or other permanent plantings covered with mulch • Uniform and evenly distributed ground cover sufficient to restrain erosion • Structural methods such as concrete, asphalt or retaining walls • Rolled erosion control products with grass seed

POLYACRYLAMIDES (PAMS) AND FLOCCULANTS

1. Select flocculants that are appropriate for the soils being exposed during construction, selecting from the *NC DWR List of Approved PAMS/Flocculants*.
2. Apply flocculants at or before the inlets to Erosion and Sediment Control Measures.
3. Apply flocculants at the concentrations specified in the *NC DWR List of Approved PAMS/Flocculants* and in accordance with the manufacturer's instructions.
4. Provide ponding area for containment of treated Stormwater before discharging offsite.
5. Store flocculants in leak-proof containers that are kept under storm-resistant cover or surrounded by secondary containment structures.

EQUIPMENT AND VEHICLE MAINTENANCE

1. Maintain vehicles and equipment to prevent discharge of fluids.
2. Provide drip pans under any stored equipment.
3. Identify leaks and repair as soon as feasible, or remove leaking equipment from the project.
4. Collect all spent fluids, store in separate containers and properly dispose as hazardous waste (recycle when possible).
5. Remove leaking vehicles and construction equipment from service until the problem has been corrected.
6. Bring used fuels, lubricants, coolants, hydraulic fluids and other petroleum products to a recycling or disposal center that handles these materials.

LITTER, BUILDING MATERIAL AND LAND CLEARING WASTE

1. Never bury or burn waste. Place litter and debris in approved waste containers.
2. Provide a sufficient number and size of waste containers (e.g dumpster, trash receptacle) on site to contain construction and domestic wastes.
3. Locate waste containers at least 50 feet away from storm drain inlets and surface waters unless no other alternatives are reasonably available.
4. Locate waste containers on areas that do not receive substantial amounts of runoff from upland areas and does not drain directly to a storm drain, stream or wetland.
5. Cover waste containers at the end of each workday and before storm events or provide secondary containment. Repair or replace damaged waste containers.
6. Anchor all lightweight items in waste containers during times of high winds.
7. Empty waste containers as needed to prevent overflow. Clean up immediately if containers overflow.
8. Dispose waste off-site at an approved disposal facility.
9. On business days, clean up and dispose of waste in designated waste containers.

PAINT AND OTHER LIQUID WASTE

1. Do not dump paint and other liquid waste into storm drains, streams or wetlands.
2. Locate paint washouts at least 50 feet away from storm drain inlets and surface waters unless no other alternatives are reasonably available.
3. Contain liquid wastes in a controlled area.
4. Containment must be labeled, sized and placed appropriately for the needs of site.
5. Prevent the discharge of soaps, solvents, detergents and other liquid wastes from construction sites.

PORTABLE TOILETS

1. Install portable toilets on level ground, at least 50 feet away from storm drains, streams or wetlands unless there is no alternative reasonably available. If 50 foot offset is not attainable, provide relocation of portable toilet behind silt fence or place on a gravel pad and surround with sand bags.
2. Provide staking or anchoring of portable toilets during periods of high winds or in high foot traffic areas.
3. Monitor portable toilets for leaking and properly dispose of any leaked material. Utilize a licensed sanitary waste hauler to remove leaking portable toilets and replace with properly operating unit.

EARTHEN STOCKPILE MANAGEMENT

1. Show stockpile locations on plans. Locate earthen-material stockpile areas at least 50 feet away from storm drain inlets, sediment basins, perimeter sediment controls and surface waters unless it can be shown no other alternatives are reasonably available.
2. Protect stockpile with silt fence installed along toe of slope with a minimum offset of five feet from the toe of stockpile.
3. Provide stable stone access point when feasible.
4. Stabilize stockpile within the timeframes provided on this sheet and in accordance with the approved plan and any additional requirements. Soil stabilization is defined as vegetative, physical or chemical coverage techniques that will restrain accelerated erosion on disturbed soils for temporary or permanent control needs.

NORTH CAROLINA *Environmental Quality*

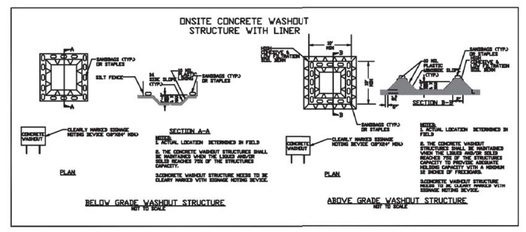

CONCRETE WASHOUTS

1. Do not discharge concrete or cement slurry from the site.
2. Dispose of, or recycle settled, hardened concrete residue in accordance with local and state solid waste regulations and at an approved facility.
3. Manage washout from mortar mixers in accordance with the above item and in addition place the mixer and associated materials on impervious barrier and within lot perimeter silt fence.
4. Install temporary concrete washouts per local requirements, where applicable. If an alternate method or product is to be used, contact your approval authority for review and approval. If local standard details are not available, use one of the two types of temporary concrete washouts provided on this detail.
5. Do not use concrete washouts for dewatering or storing defective curb or sidewalk sections. Stormwater accumulated within the washout may not be pumped into or discharged to the storm drain system or receiving surface waters. Liquid waste must be pumped out and removed from project.
6. Locate washouts at least 50 feet from storm drain inlets and surface waters unless it can be shown that no other alternatives are reasonably available. At a minimum, install protection of storm drain inlet(s) closest to the washout which could receive spills or overflow.
7. Locate washouts in an easily accessible area, on level ground and install a stone entrance pad in front of the washout. Additional controls may be required by the approving authority.
8. Install at least one sign directing concrete trucks to the washout within the project limits. Post signage on the washout itself to identify this location.
9. Remove leavings from the washout when at approximately 75% capacity to limit overflow events. Replace the tarp, sand bags or other temporary structural components when no longer functional. When utilizing alternative or proprietary products, follow manufacturer's instructions.
10. At the completion of the concrete work, remove remaining leavings and dispose of in an approved disposal facility. Fill pit, if applicable, and stabilize any disturbance caused by removal of washout.

HERBICIDES, PESTICIDES AND RODENTICIDES

1. Store and apply herbicides, pesticides and rodenticides in accordance with label restrictions.
2. Store herbicides, pesticides and rodenticides in their original containers with the label, which lists directions for use, ingredients and first aid steps in case of accidental poisoning.
3. Do not store herbicides, pesticides and rodenticides in areas where flooding is possible or where they may spill or leak into wells, stormwater drains, ground water or surface water. If a spill occurs, clean area immediately.
4. Do not stockpile these materials onsite.

HAZARDOUS AND TOXIC WASTE

1. Create designated hazardous waste collection areas on-site.
2. Place hazardous waste containers under cover or in secondary containment.
3. Do not store hazardous chemicals, drums or bagged materials directly on the ground.

NCG01 GROUND STABILIZATION AND MATERIALS HANDLING

EFFECTIVE: 04/01/19

a. Town Certification. This design has been reviewed by the Engineer for the Town of Knightdale, and to the best of my knowledge and belief, it conforms to the requirements established in the Standard Specifications of the Town of Knightdale.

By: Samuel A. MacDonald Date: _____
Town Engineer

These plans are approved by the Town of Knightdale and serve as construction plans for this project.

By: Kevin Lewis Date: _____
Administrator

1

No.	REVISIONS	DATE	BY
1	REVISED PER TOK COMMENTS	9/12/23	ASA
2	REVISED PER TOK COMMENTS	01/12/24	DPM

Kimley»Horn
© 2023 KIMLEY-HORN AND ASSOCIATES, INC.
421 FAYETTEVILLE STREET, SUITE 600, RALEIGH, NC 27601
PHONE: 919-677-2000 FAX: 919-677-2050
WWW.KIMLEY-HORN.COM
##-0102

NORTH CAROLINA PROFESSIONAL ENGINEER SEAL 052434 TIMOTHY R. CARTER 1/25/2024

KHA PROJECT 017254013
DATE 06/26/2023
SCALE AS SHOWN
DESIGNED BY KEJ
DRAWN BY KEJ
CHECKED BY COB

EROSION CONTROL DETAILS

DEWITT KNIGHTDALE
PREPARED FOR
WIDEWATERS
TOWN OF KNIGHTDALE
NORTH CAROLINA

SHEET NUMBER
C9.2

LANDSCAPE REQUIREMENTS & CALCULATIONS

Town of Knightdale UDO

AREA TO BE LANDSCAPED	CODE REQUIREMENT	SITE LOCATION	MEASUREMENT	TOTAL QUANTITY REQUIRED	TOTAL QUANTITY PROVIDED
10' TYPE A BUFFER	PER 100 LF: 3 CANOPY TREES 2 UNDERSTORY TREES SCREENING FENCE	SOUTH PROPERTY LINE	**936 LF**	(936 / 100) x 3 = 29 CANOPY TREES (936 / 100) x 2 = 19 UNDERSTORY TREES	**30 CANOPY TREES (50% EVERGREEN)** **20 UNDERSTORY TREES (50% EVERGREEN)**
30' TYPE C BUFFER	PER 100 LF: 5 CANOPY TREES 5 UNDERSTORY TREES 25 SHRUBS 40%-60% OF TREES MUST BE EVERGREEN 80% OF SHRUBS MUST BE EVERGREEN	EAST PROPERTY LINE	**449 LF**	(449 / 100) x 3 = 23 CANOPY TREES (449 / 100) x 5 = 23 UNDERSTORY TREES (449 / 100) x 25 = 113 SHRUBS	**EXISTING UNDISTURBED BUFFER VEGETATION TO REMAIN**
PARKING LOT SCREENING	SIDES OF PARKING LOTS ADJACENT TO STREET RIGHTS-OF-WAY SCREENED TO TYPE A BUFFER STANDARDS	ALL PARKING LOT SIDES ADJACENT TO RIGHTS-OF-WAY	**240**	(353 / 100) x 3 = 8 CANOPY TREES (353 / 100) x 2 = 5 UNDERSTORY TREES (353 / 100) x 20 = 48 SHRUBS	**8 CANOPY TREES (50% EVERGREEN)** **8 UNDERSTORY TREES (50% EVERGREEN)** **48 SHRUBS (100% EVERGREEN)**
TREE COVER AREA	AREA EQUAL TO THE PERIMETER OF THE DEVELOPMENT MULTIPLIED BY 20 (UP TO 10% OF SITE)	SEE LANDSCAPE PLAN FOR LOCATION	**1,832 LF***	1,832 x 20 = 36,640 SF	**42,005 SF (STREAM BUFFER)**

*TREE COVER AREA HAS BEEN CALCULATED TO INCLUDE THE HOTEL LOT ONLY. THE MULTI-USE LOT TREE COVER AREA WAS CALCULATED AND DOCUMENTED DURING PREVIOUS PHASES.

NOTES:
1. TREE COVER AREAS HAVE BEEN CALCULATED AND SHOWN FOR THE PROPOSED HOTEL LOT. TREE COVER AREA FOR THE MULTI-USE LOT WERE CALCULATED AND DOCUMENTED IN PREVIOUS PHASES.
2. THIS SHEET IS INTENDED FOR LANDSCAPE INSTALLATION REFERENCE ONLY. FOR SITE IMPROVEMENTS, SEE CIVIL SHEETS.
3. UTILITIES ON THIS SHEET ARE SHOWN FOR REFERENCE ONLY. CONTRACTOR SHALL CONFIRM UTILITY LOCATIONS PRIOR TO CONSTRUCTION.
4. THE EXISTING SCREEN FENCE WITHIN THE SOUTHERN TYPE A BUFFER SHALL REMAIN AND BE USED IN PLACE OF BUFFER SHRUB PLANTINGS.
5. SEE SHEET LS2.0 FOR LANDSCAPE NOTES, CALCULATIONS, AND DETAILS.

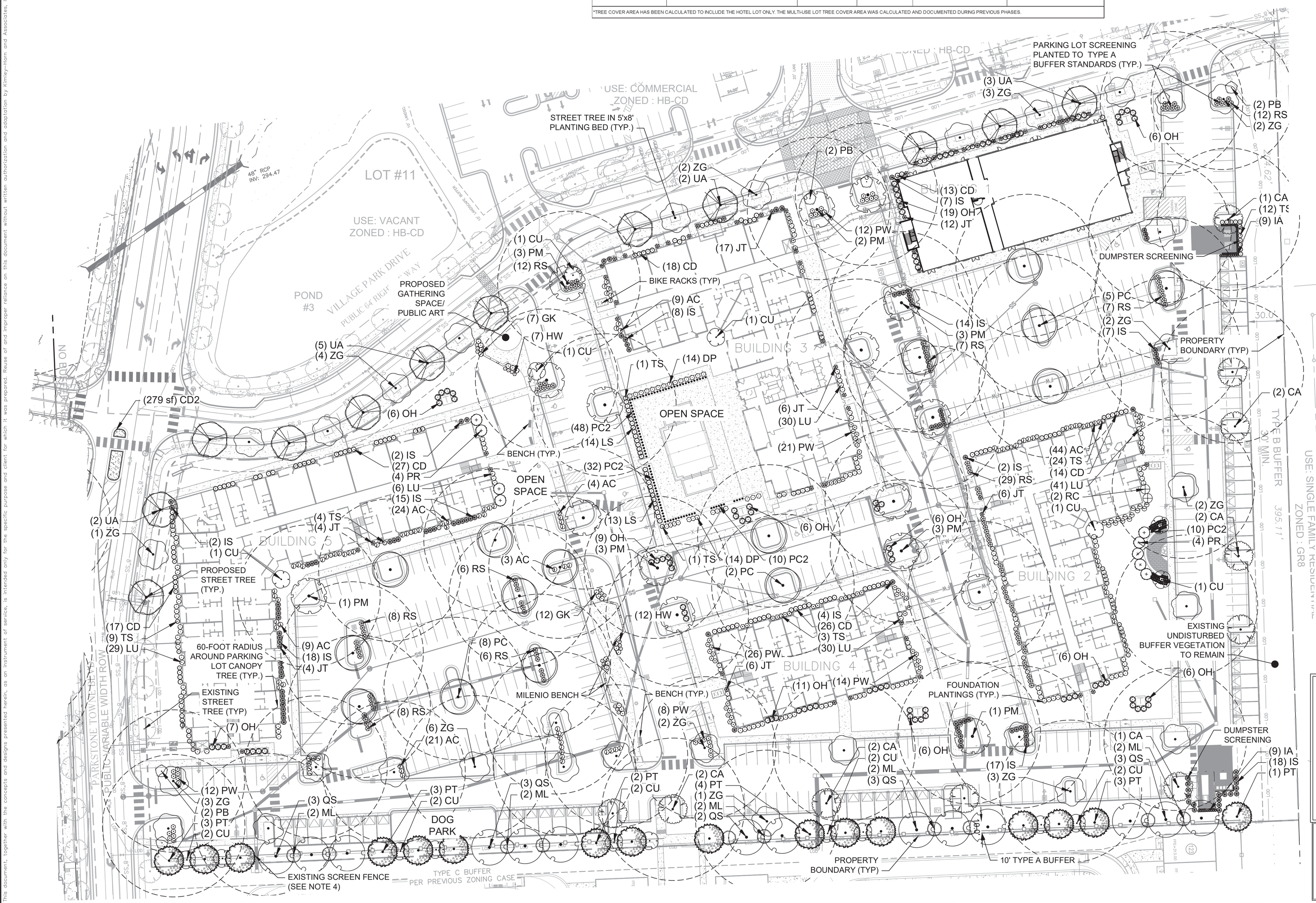

ALL CONSTRUCTION TO BE IN ACCORDANCE WITH ALL TOWN OF KNIGHTDALE AND/OR NCDOT STANDARDS AND SPECIFICATIONS.

EXISTING CONDITION NOTES:

1. EXISTING INFORMATION SHOWN FROM AN ALTA/ACSM LAND TITLE SURVEY PROVIDED BY CHANDLER LAND SURVEYING, INC., 83 ADAMS POINT DRIVE, GARNER, NC 27529, PHONE: 919-291-9163 AND DATED NOVEMBER 21, 2017 AND TAKEN FROM TOWN OF KNIGHTDALE APPROVED CONSTRUCTION PLANS FOR PARKSTONE AT KNIGHTDALE (KHA #017254001) DATED NOVEMBER 15, 2016, FROM TOWN OF KNIGHTDALE APPROVED CONSTRUCTION PLANS FOR PARKSTONE VILLAGE (KHA #017254009) DATED NOVEMBER 8, 2019 AND PROVIDED BY KIMLEY-HORN AND ASSOCIATES, 421 FAYETTEVILLE STREET, SUITE 600, RALEIGH, NC 27601, PHONE: 919-677-2000, AND FROM A SANITARY SEWER ELEVATION SURVEY PROVIDED BY RWK, PA, 101 W. MAIN ST SUITE 202M GARNER, NC 27529, PHONE: 919-779-4854 AND DATED NOVEMBER 10, 2021.
2. THE SUBJECT PROPERTY IS NOT LOCATED WITHIN A SPECIAL FLOOD HAZARD AREA. IT IS LOCATED IN ZONE X BASED ON THE FLOOD INSURANCE RATE MAP COMMUNITY MAP NUMBER 3720174400K DATED JULY 19, 2022.

a. Town Certification. This design has been reviewed by the Engineer for the Town of Knightdale, and to the best of my knowledge and belief, it conforms to the requirements established in the Standard Specifications of the Town of Knightdale.

By: Samuel A. MacDonald Date: _____
Town Engineer

These plans are approved by the Town of Knightdale and serve as construction plans for this project.

By: Kevin Lewis Date: _____
Administrator

No.	REVISIONS	DATE	BY
4	REVISED PER TOK COMMENTS	04/19/24	MDB
3	REVISED PER TOK COMMENTS	02/27/24	MDB
2	REVISED PER TOK COMMENTS	01/12/24	DPM
1	REVISED PER TOK COMMENTS	9/12/23	ASA

Kimley»Horn
© 2023 KIMLEY-HORN AND ASSOCIATES, INC.
421 FAYETTEVILLE STREET, SUITE 600, RALEIGH, NC 27601
PHONE: 919-677-2000 FAX: 919-677-2050
WWW.KIMLEY-HORN.COM
#F-0102

NORTH CAROLINA REGISTERED LANDSCAPE ARCHITECT SEAL 2982 MATTHEW R. GROSS 04/26/2024

KHA PROJECT	017254013
DATE	06/26/2023
SCALE	AS SHOWN
DESIGNED BY	AWF
DRAWN BY	AWF
CHECKED BY	MRG

LANDSCAPE PLAN

DEWITT KNIGHTDALE
PREPARED FOR
WIDEWATERS
TOWN OF KNIGHTDALE NORTH CAROLINA

SHEET NUMBER
LS1.0

Plotted By: Barnes, Michael Street Set: DeWitt Knightdale Layout: LS1.0 LANDSCAPE PLAN April 26, 2024 12:20:08pm K:\RAL_LDEV\017254013-DeWitt Knightdale\Planning Phase\15-CAD Files\PlanSheets\LS1.0 LANDSCAPE PLAN.dwg
This document, together with the concepts and designs presented herein, as an instrument of service, is intended only for the specific purpose and client for which it was prepared. Reuse of and improper reliance on this document without written authorization and adaptation by Kimley-Horn and Associates, Inc. shall be without liability to Kimley-Horn and Associates, Inc.

OVERALL PLANT SCHEDULE

CANOPY TREES	CODE	QTY	BOTANICAL NAME	COMMON NAME	CONT.	SIZE	HEIGHT
	CA	10	CARPINUS CAROLINIANA	AMERICAN HORNBEAM	B&B	2" CAL.	10'-12' HT.
	PC	15	PISTACIA CHINENSIS	CHINESE PISTACHE	B&B	2" CAL.	10'-12' HT.
	PM	16	PLATANUS X ACERIFOLIA 'MORTON CIRCLE' TM	EXCLAMATION! LONDON PLANE TREE	B&B	2" CAL.	10'-12' HT.
	PT	16	PINUS TAEDA	LOBLOLLY PINE	B&B	2" CAL.	10'-12' HT.
	QS	14	QUERCUS SHUMARDII	SHUMARD OAK	B&B	2" CAL.	10'-12' HT.
	UA	12	ULMUS PARVIFOLIA 'ALLEE'	ALLEE® LACEBARK ELM	B&B	2" CAL.	10'-12' HT.
	ZG	31	ZELKOVA SERRATA `GREEN VASE`	GREEN VASE JAPANESE ZELKOVA	B&B	2" CAL.	10'-12' HT.
UNDERSTORY TREES	**CODE**	**QTY**	**BOTANICAL NAME**	**COMMON NAME**	**CONT.**	**SIZE**	**HEIGHT**
	CU	17	CORNUS KOUSA 'RUTPINK' TM	SCARLET FIRE KOUSA DOGWOOD	B&B	1.5" CAL	8`-10` HT.
	ML	10	MAGNOLIA GRANDIFLORA 'LITTLE GEM'	LITTLE GEM DWARF SOUTHERN MAGNOLIA	B&B	1.5" CAL	6`-8` HT.
	PB	6	PRUNUS CAROLINIANA 'MONUS'	BRIGHT `N TIGHT CAROLINA LAUREL CHERRY	B&B	1.5" CAL	6`-8` HT.
SHRUBS	**CODE**	**QTY**	**BOTANICAL NAME**	**COMMON NAME**	**CONT.**	**SIZE**	
	AC	114	ABELIA X GRANDIFLORA 'CANYON CREEK'	CANYON CREEK GLOSSY ABELIA	3 GAL	18" MIN.	
	CD	115	CEPHALOTAXUS HARRINGTONIA 'DUKE GARDENS'	DUKE GARDENS PLUM YEW	3 GAL	24" MIN.	
	DP	28	DISTYLIUM `VINTAGE JADE` PP23, 128	VINTAGE JADE DISTYLIUM	3 GAL	18" MIN.	
	IA	18	ILEX CRENATA 'SKY PENCIL'	SKY PENCIL HOLLY	3 GAL	18" MIN.	
	IS	114	ILEX GLABRA 'SHAMROCK'	SHAMROCK INKBERRY HOLLY	3 GAL	18" MIN.	
	JT	55	JUNIPERUS VIRGINIANA `TAYLOR`	TAYLOR EASTERN REDCEDAR	5 GAL	36" MIN.	
	LS	27	LOROPETALUM CHINENSE RUBRUM 'PEACK'	PURPLE PIXIE® DWARF FRINGE FLOWER	5 GAL		
	LU	136	LOROPETALUM CHINENSE RUBRUM 'DARK FIRE'	DARK FIRE FRINGE FLOWER	3 GAL	24" MIN.	
	OH	88	OSMANTHUS HETEROPHYLLUS 'GOSHIKI'	GOSHIKI HOLLY OLIVE	3 GAL	18" MIN.	
	PC2	177	PENNISETUM ALOPECUROIDES 'CASSIAN'S CHOICE'	CASSIAN FOUNTAIN GRASS	5 GAL		
	PR	9	PHOTINIA X FRASERI 'RED ROBIN'	RED ROBIN PHOTINIA	5 GAL	24" MIN.	
	PW	93	PITTOSPORUM TOBIRA 'WHEELER'S DWARF'	WHEELER'S DWARF PITTOSPORUM	3 GAL	18" MIN.	
	RC	2	RHODODENDRON CATAWBIENSE	CATAWBA RHODODENDRON	5 GAL	24" MIN.	
	RS	95	RHAPHIOLEPIS INDICA 'SNOW WHITE'	SNOW WHITE INDIAN HAWTHORN	3 GAL	24" MIN.	
	TS	54	THUJA OCCIDENTALIS 'SMARAGD'	EMERALD GREEN ARBORVITAE	5 GAL	36" MIN.	
GROUND COVERS	**CODE**	**QTY**	**BOTANICAL NAME**	**COMMON NAME**	**CONT.**		
	CD2	279 SF	CYNODON DACTYLON	BERMUDAGRASS	SOD		

PLANT SCHEDULE PARKING LOT AREAS

CANOPY TREES	CODE	QTY	BOTANICAL NAME	COMMON NAME	CONT.	SIZE	HEIGHT
	CA	10	CARPINUS CAROLINIANA	AMERICAN HORNBEAM	B&B	2" CAL.	10'-12' HT.
	PC	15	PISTACIA CHINENSIS	CHINESE PISTACHE	B&B	2" CAL.	10'-12' HT.
	PM	12	PLATANUS X ACERIFOLIA 'MORTON CIRCLE' TM	EXCLAMATION! LONDON PLANE TREE	B&B	2" CAL.	10'-12' HT.
	ZG	17	ZELKOVA SERRATA `GREEN VASE`	GREEN VASE JAPANESE ZELKOVA	B&B	2" CAL.	10'-12' HT.
SHRUBS	**CODE**	**QTY**	**BOTANICAL NAME**	**COMMON NAME**	**CONT.**	**SIZE**	
	AC	28	ABELIA X GRANDIFLORA 'CANYON CREEK'	CANYON CREEK GLOSSY ABELIA	3 GAL	18" MIN.	
	IA	9	ILEX CRENATA 'SKY PENCIL'	SKY PENCIL HOLLY	3 GAL	18" MIN.	
	IS	38	ILEX GLABRA 'SHAMROCK'	SHAMROCK INKBERRY HOLLY	3 GAL	18" MIN.	
	OH	15	OSMANTHUS HETEROPHYLLUS 'GOSHIKI'	GOSHIKI HOLLY OLIVE	3 GAL	18" MIN.	
	PW	8	PITTOSPORUM TOBIRA 'WHEELER'S DWARF'	WHEELER'S DWARF PITTOSPORUM	3 GAL	18" MIN.	
	RS	42	RHAPHIOLEPIS INDICA 'SNOW WHITE'	SNOW WHITE INDIAN HAWTHORN	3 GAL	24" MIN.	
	TS	12	THUJA OCCIDENTALIS 'SMARAGD'	EMERALD GREEN ARBORVITAE	5 GAL	36" MIN.	

PLANT SCHEDULE PARKING LOT SCREENING

CANOPY TREES	CODE	QTY	BOTANICAL NAME	COMMON NAME	CONT.	SIZE	HEIGHT
	PM	4	PLATANUS X ACERIFOLIA 'MORTON CIRCLE' TM	EXCLAMATION! LONDON PLANE TREE	B&B	2" CAL.	10'-12' HT.
	ZG	4	ZELKOVA SERRATA `GREEN VASE`	GREEN VASE JAPANESE ZELKOVA	B&B	2" CAL.	10'-12' HT.
UNDERSTORY TREES	**CODE**	**QTY**	**BOTANICAL NAME**	**COMMON NAME**	**CONT.**	**SIZE**	**HEIGHT**
	CU	2	CORNUS KOUSA 'RUTPINK' TM	SCARLET FIRE KOUSA DOGWOOD	B&B	1.5" CAL	8`-10` HT.
	PB	6	PRUNUS CAROLINIANA 'MONUS'	BRIGHT `N TIGHT CAROLINA LAUREL CHERRY	B&B	1.5" CAL	6`-8` HT.
SHRUBS	**CODE**	**QTY**	**BOTANICAL NAME**	**COMMON NAME**	**CONT.**	**SIZE**	
	PW	24	PITTOSPORUM TOBIRA 'WHEELER'S DWARF'	WHEELER'S DWARF PITTOSPORUM	3 GAL	18" MIN.	
	RS	24	RHAPHIOLEPIS INDICA 'SNOW WHITE'	SNOW WHITE INDIAN HAWTHORN	3 GAL	24" MIN.	
GROUND COVERS	**CODE**	**QTY**	**BOTANICAL NAME**	**COMMON NAME**	**CONT.**		
	CD2	279 SF	CYNODON DACTYLON	BERMUDAGRASS	SOD		

PLANT SCHEDULE 10' TYPE A BUFFER

CANOPY TREES	CODE	QTY	BOTANICAL NAME	COMMON NAME	CONT.	SIZE	HEIGHT
	PT	16	PINUS TAEDA	LOBLOLLY PINE	B&B	2" CAL.	10'-12' HT.
	QS	14	QUERCUS SHUMARDII	SHUMARD OAK	B&B	2" CAL.	10'-12' HT.
UNDERSTORY TREES	**CODE**	**QTY**	**BOTANICAL NAME**	**COMMON NAME**	**CONT.**	**SIZE**	**HEIGHT**
	CU	10	CORNUS KOUSA 'RUTPINK' TM	SCARLET FIRE KOUSA DOGWOOD	B&B	1.5" CAL	8`-10` HT.
	ML	10	MAGNOLIA GRANDIFLORA 'LITTLE GEM'	LITTLE GEM DWARF SOUTHERN MAGNOLIA	B&B	1.5" CAL	6`-8` HT.

PLANT SCHEDULE STREET TREES

CANOPY TREES	CODE	QTY	BOTANICAL NAME	COMMON NAME	CONT.	SIZE	HEIGHT
	UA	12	ULMUS PARVIFOLIA 'ALLEE'	ALLEE® LACEBARK ELM	B&B	2" CAL.	10'-12' HT.
	ZG	10	ZELKOVA SERRATA `GREEN VASE`	GREEN VASE JAPANESE ZELKOVA	B&B	2" CAL.	10'-12' HT.

PLANT SCHEDULE FOUNDATION PLANTING

UNDERSTORY TREES	CODE	QTY	BOTANICAL NAME	COMMON NAME	CONT.	SIZE	HEIGHT
	CU	3	CORNUS KOUSA 'RUTPINK' TM	SCARLET FIRE KOUSA DOGWOOD	B&B	1.5" CAL	8`-10` HT.
SHRUBS	**CODE**	**QTY**	**BOTANICAL NAME**	**COMMON NAME**	**CONT.**	**SIZE**	
	AC	86	ABELIA X GRANDIFLORA 'CANYON CREEK'	CANYON CREEK GLOSSY ABELIA	3 GAL	18" MIN.	
	CD	115	CEPHALOTAXUS HARRINGTONIA 'DUKE GARDENS'	DUKE GARDENS PLUM YEW	3 GAL	24" MIN.	
	DP	28	DISTYLIUM `VINTAGE JADE` PP23, 128	VINTAGE JADE DISTYLIUM	3 GAL	18" MIN.	
	IA	9	ILEX CRENATA 'SKY PENCIL'	SKY PENCIL HOLLY	3 GAL	18" MIN.	
	IS	76	ILEX GLABRA 'SHAMROCK'	SHAMROCK INKBERRY HOLLY	3 GAL	18" MIN.	
	JT	55	JUNIPERUS VIRGINIANA `TAYLOR`	TAYLOR EASTERN REDCEDAR	5 GAL	36" MIN.	
	LS	9	LOROPETALUM CHINENSE RUBRUM 'PEACK'	PURPLE PIXIE® DWARF FRINGE FLOWER	5 GAL		
	LU	136	LOROPETALUM CHINENSE RUBRUM 'DARK FIRE'	DARK FIRE FRINGE FLOWER	3 GAL	24" MIN.	
	OH	55	OSMANTHUS HETEROPHYLLUS 'GOSHIKI'	GOSHIKI HOLLY OLIVE	3 GAL	18" MIN.	
	PC2	90	PENNISETUM ALOPECUROIDES 'CASSIAN'S CHOICE'	CASSIAN FOUNTAIN GRASS	5 GAL		
	PR	4	PHOTINIA X FRASERI 'RED ROBIN'	RED ROBIN PHOTINIA	5 GAL	24" MIN.	
	PW	61	PITTOSPORUM TOBIRA 'WHEELER'S DWARF'	WHEELER'S DWARF PITTOSPORUM	3 GAL	18" MIN.	
	RC	2	RHODODENDRON CATAWBIENSE	CATAWBA RHODODENDRON	5 GAL	24" MIN.	
	RS	29	RHAPHIOLEPIS INDICA 'SNOW WHITE'	SNOW WHITE INDIAN HAWTHORN	3 GAL	24" MIN.	
	TS	41	THUJA OCCIDENTALIS 'SMARAGD'	EMERALD GREEN ARBORVITAE	5 GAL	36" MIN.	

PLANT SCHEDULE BENCH PLANTINGS

SYMBOL	CODE	QTY	BOTANICAL NAME	COMMON NAME	CONT.	HEIGHT
SHRUBS						
	GK	19	GARDENIA JASMINOIDES 'KLEIM'S HARDY"	KLEIM'S HARDY GARDENIA	3 GAL	20" HT MIN
	HW	19	HYDRANGEA QUERCIFOLIA 'PEE WEE'	PEE WEE OAKLEAF HYDRANGEA	3 GAL	20" HT MIN

ALL CONSTRUCTION TO BE IN ACCORDANCE WITH ALL TOWN OF KNIGHTDALE AND/OR NCDOT STANDARDS AND SPECIFICATIONS.

EXISTING CONDITION NOTES:

1. EXISTING INFORMATION SHOWN FROM AN ALTA/ACSM LAND TITLE SURVEY PROVIDED BY CHANDLER LAND SURVEYING, INC., 83 ADAMS POINT DRIVE, GARNER, NC 27529, PHONE: 919-291-9163 AND DATED NOVEMBER 21, 2017 AND TAKEN FROM TOWN OF KNIGHTDALE APPROVED CONSTRUCTION PLANS FOR PARKSTONE AT KNIGHTDALE (KHA #017254001) DATED NOVEMBER 15, 2016, FROM TOWN OF KNIGHDALE APPROVED CONSTRUCTION PLANS FOR PARKSTONE VILLAGE (KHA #017254009) DATED NOVEMBER 8, 2019 AND PROVIDED BY KIMLEY-HORN AND ASSOCIATES, 421 FAYETTEVILLE STREET, SUITE 600, RALEIGH, NC 27601, PHONE: 919-677-2000, AND FROM A SANITARY SEWER ELEVATION SURVEY PROVIDED BY RWK, PA, 101 W. MAIN ST SUITE 202M GARNER, NC 27529, PHONE: 919-779-4854 AND DATED NOVEMBER 10, 2021.
2. THE SUBJECT PROPERTY IS NOT LOCATED WITHIN A SPECIAL FLOOD HAZARD AREA. IT IS LOCATED IN ZONE X BASED ON THE FLOOD INSURANCE RATE MAP COMMUNITY MAP NUMBER 3720174400K DATED JULY 19, 2022.

a. **Town Certification.** This design has been reviewed by the Engineer for the Town of Knightdale, and to the best of my knowledge and belief, it conforms to the requirements established in the Standard Specifications of the Town of Knightdale.

By: Samuel A. MacDonald Date: _____
Town Engineer

These plans are approved by the Town of Knightdale and serve as construction plans for this project.

By: Kevin Lewis Date: _____
Administrator

No.	REVISIONS	DATE	BY
4	REVISED PER TOK COMMENTS	04/19/24	MDB
3	REVISED PER TOK COMMENTS	02/27/24	MDB
2	REVISED PER TOK COMMENTS	01/12/24	DPM
1	REVISED PER TOK COMMENTS	9/12/23	ASA

Kimley»Horn
© 2023 KIMLEY-HORN AND ASSOCIATES, INC.
421 FAYETTEVILLE STREET, SUITE 600, RALEIGH, NC 27601
PHONE: 919-677-2000 FAX: 919-677-2050
WWW.KIMLEY-HORN.COM
#F-0102

NORTH CAROLINA REGISTERED LANDSCAPE ARCHITECT 2983 04/26/2024 MATTHEW R. GROSS

KHA PROJECT	017254013
DATE	06/26/2023
SCALE	AS SHOWN
DESIGNED BY	AWF
DRAWN BY	AWF
CHECKED BY	COB

PLANTING SCHEDULES

DEWITT KNIGHTDALE
PREPARED FOR
WIDEWATERS
TOWN OF KNIGHTDALE NORTH CAROLINA

SHEET NUMBER
LS1.1

Plotted By:Barnes, Michael Sheet Set:DeWitt Knightdale Layout:LS1 PLANTING SCHEDULES April 26, 2024 12:20:14pm K:\RAL_LDEV\017254013_DeWitt Knightdale\Planning Phase\15_CAD Files\PlanSheets\LS1 LANDSCAPE PLAN.dwg
This document, together with the concepts and designs presented herein, as an instrument of service, is intended only for the specific purpose and client for which it was prepared. Reuse of and improper reliance on this document without written authorization and adaptation by Kimley-Horn and Associates, Inc. shall be without liability to Kimley-Horn and Associates, Inc.

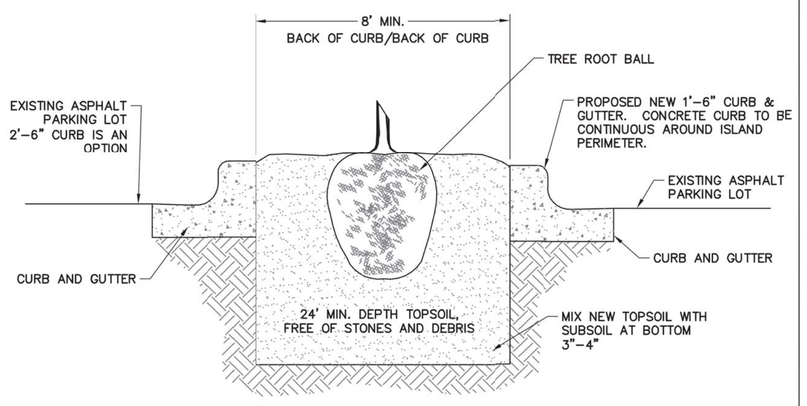

NOTES:

1. 300 SF MIN. TOTAL REQUIRED AREA PER TREE.
2. FOR NEW PLANTING AREAS, REMOVE ALL PAVEMENT, GRAVEL SUB-BASE AND CONSTRUCTION DEBRIS BEFORE PREPARING SOIL AND PLANTING TREES.
3. REMOVE COMPACTED SOIL AND ADD 24" NEW OR TOPSOIL/PLANTING MIX OR UNCOMPACT AND AMEND TOP 24" OF EXISTING SOIL TO MEET TOPSOIL/PLANTING MIX STANDARDS FOR TREES.

REVISIONS	
DATE	DESCRIPTION

TOWN OF KNIGHTDALE STANDARD DETAILS	TREE PLANTING ISLAND IN PARKING LOTS	STD. NO. 3.23

NOTES:

1. REMOVE WIRE OR NYLON TWINE FROM BALL.
2. SOAK ROOT BALL AND PLANT PIT IMMEDIATELY AFTER INSTALLATION.

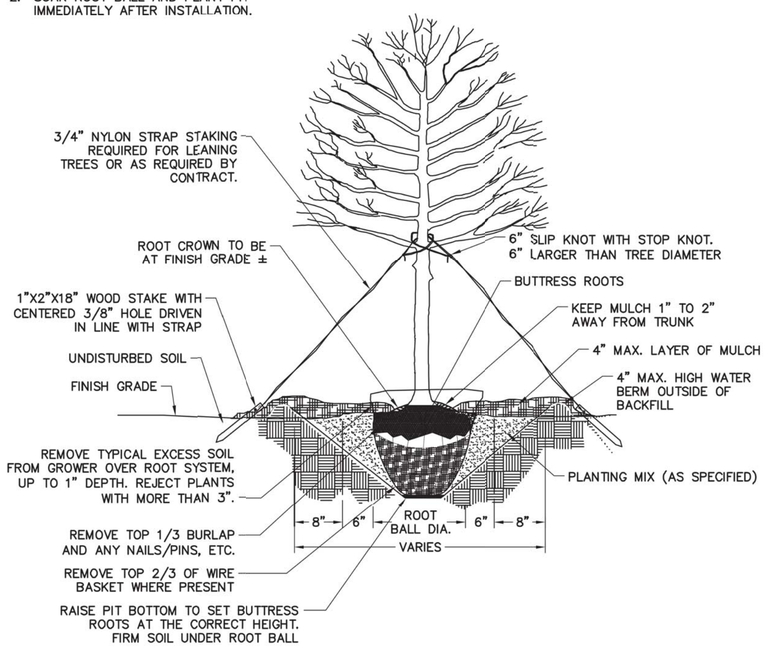

ALL TREES SHALL MEET AMERICAN STANDARD FOR NURSERY STOCK
(AMSI, 1990, PART 1, "SHADE AND FLOWERING TREES")

FOR EXAMPLE: CALIPER	HEIGHT (RANGE)	MAX. HEIGHT	MIN. ROOT BALL DIA.	MIN. ROOT BALL DEPTH
2"	12–14'	16'	24"	16"
3"	14–16'	18'	32"	21"

REVISIONS	
DATE	DESCRIPTION

TOWN OF KNIGHTDALE STANDARD DETAILS	TREE PLANTING (FOR SINGLE AND MULTI-STEM TREES)	STD. NO. 3.25

NOTES:

1. TO BE USED ONLY IN RESIDENTIAL, COMMERCIAL/MIXED USE AREAS. SEE DETAIL SERIES 3.24.
2. FOR NEW PLANTING AREAS, REMOVE ALL PAVEMENT, GRAVEL, SUB-BASE, AND CONSTRUCTION DEBRIS BEFORE PREPARING SOIL AND PLANTING TREES.
3. REMOVE COMPACTED SOIL AND ADD 24" NEW TOPSOIL WITH PLANT MIX OR UNCOMPACT AND AMEND TO 24" OF EXISTING SOIL TO MEET TOPSOIL WITH PLANTING MIX STANDARDS FOR TREES.
4. MULCH SHALL NOT BE STACKED AGAINST BASE OF PLANTING.

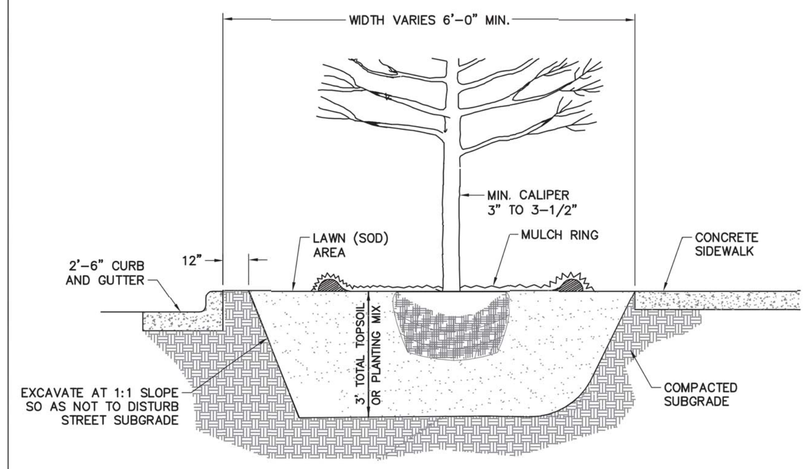

REVISIONS	
DATE	DESCRIPTION

TOWN OF KNIGHTDALE STANDARD DETAILS	6' TREE PLANTING MIXED USE AREAS	STD. NO. 3.26

1 L2.0 TREE PLANTING ISLAND IN PARKING LOTS
SCALE: NTS SECTION

2 L2.0 TREE PLANTING FOR SINGLE AND MULTI-STEM TREES
SCALE: NTS SECTION

3 L2.0 6' TREE PLANTING IN MIXED USE AREAS
SCALE: NTS SECTION

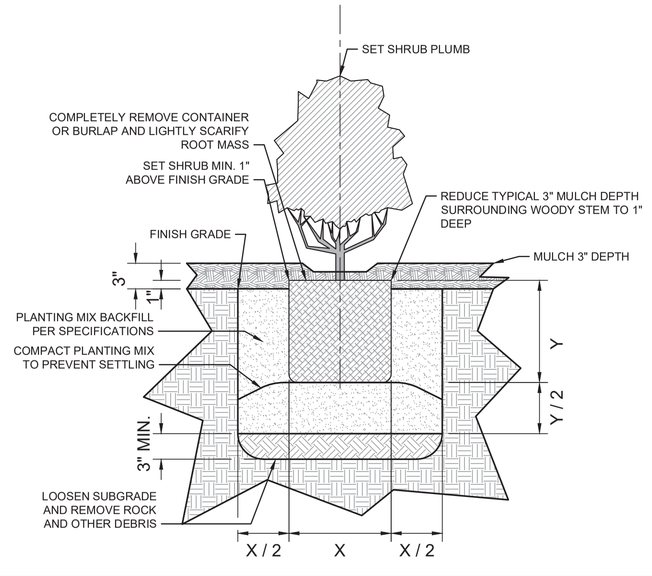

GENERAL LANDSCAPE NOTES:

1. ALL PLANT MATERIAL PRICING SHALL INCLUDE MULCH, BED PREPARATION, AND STAKING.
2. ALL PLANTING BEDS SHALL RECEIVE 3" (THREE INCHES) OF MULCH.

   MULCH TYPE FOR PROJECT: TRIPLE GROUND HARDWOOD MULCH OR CURRENT TOWN STANDARD.
3. PLANT MATERIAL SPACING SHOWN ON LANDSCAPE PLANS SHALL OVERRIDE TYPICAL PLANT SPACING INDICATED ON PLANT SCHEDULE. LANDSCAPE CONTRACTOR RESPONSIBLE FOR VERIFYING ALL PLANT SPACING AND MAKING MINOR FIELD ADJUSTMENTS DUE TO UTILITY CONFLICTS.

4 L2.0 TYPICAL SHRUB PLANTING
SCALE: NTS SECTION

GENERAL LANDSCAPE NOTES:

1. ALL PLANTS MUST BE HEALTHY, VIGOROUS MATERIAL, FREE OF PESTS AND DISEASE.
2. ALL PLANTS MUST BE CONTAINER GROWN OR BALLED AND BURLAPPED AS INDICATED IN THE PLANT SCHEDULE.
3. CONTRACTOR SHALL PROCURE ALL TREES OF LIKE SPECIES FROM THE SAME NURSERY. ALL TREES SHALL BE TAGGED AT THE NURSERY BY THE LANDSCAPE ARCHITECT PRIOR TO PURCHASE AND DELIVERY TO THE PROJECT SITE.
4. ALL TREES MUST HAVE A STRAIGHT TRUNK AND FULL HEADED AND MEET ALL REQUIREMENTS SPECIFIED.
5. ALL PLANT MATERIAL STORED ON SITE SHALL BE LOCATED OUT OF DIRECT SUNLIGHT.
6. ALL SHADE TREES ADJACENT TO PEDESTRIAN WALKWAYS SHALL BE BRANCHED 8'-7" PER ANSI Z60.1 STANDARDS FOR HEIGHT OF BRANCHING - STREET TREES. ALL SHADE TREES LOCATED WITHIN VEHICLE SIGHT TRIANGLES SHALL BE BRANCHED MIN. 8' (MEASURED FROM ADJACENT PROJECTED CURB LINE ELEVATION) PER ANSI Z60.1 STANDARDS FOR HEIGHT OF BRANCHING - STREET TREES.
7. ALL PLANTING BEDS AND TREE RINGS MUST BE COMPLETELY MULCHED AS SPECIFIED.
8. ANY PLANT MATERIAL WHICH DIES, TURNS BROWN, OR DEFOLIATES (PRIOR TO SUBSTANTIAL COMPLETION OF THE WORK) SHALL BE PROMPTLY REMOVED FROM THE SITE AND REPLACED WITH MATERIAL OF THE SAME SPECIES, QUANTITY, AND SIZE AND MEETING ALL PLANT LIST SPECIFICATIONS.
9. STANDARDS SET FORTH IN "AMERICAN STANDARD FOR NURSERY STOCK" REPRESENT GUIDELINE SPECIFICATIONS ONLY AND SHALL CONSTITUTE MINIMUM QUALITY REQUIREMENTS FOR PLANT MATERIAL.
10. ALL SHRUB, GROUND COVER AND SEASONAL COLOR ANNUAL PLANTING BEDS ARE TO BE COMPLETELY COVERED WITH TRIPLE GROUND HARDWOOD MULCH TO A MINIMUM DEPTH OF THREE (3) INCHES.
11. LOCATIONS OF EXISTING BURIED UTILITY LINES SHOWN ON THE PLANS ARE BASED UPON BEST AVAILABLE INFORMATION AND ARE TO BE CONSIDERED APPROXIMATE. IT SHALL BE THE RESPONSIBILITY OF THE CONTRACTOR TO VERIFY THE LOCATIONS OF UTILITY LINES AND ADJACENT TO THE WORK AREA. THE CONTRACTOR IS RESPONSIBLE FOR THE PROTECTION OF ALL UTILITY LINES DURING THE CONSTRUCTION PERIOD.
12. SAFE, CLEARLY MARKED PEDESTRIAN AND VEHICULAR ACCESS TO ALL ADJACENT PROPERTIES MUST BE MAINTAINED THROUGHOUT THE CONSTRUCTION PROCESS.
13. ALL PLANT MATERIAL QUANTITIES SHOWN ARE APPROXIMATE. CONTRACTOR SHALL BE RESPONSIBLE FOR COMPLETE COVERAGE OF ALL PLANTING BEDS AT SPACING SHOWN.
14. THE TOP OF ALL ROOT BALLS SHALL BEAR THE SAME RELATIONSHIP TO FINISHED GRADE, AS BORN TO PREVIOUS GRADE AND GROWING CONDITIONS.
15. ALL ROOT BALLS REMOVED FROM CONTAINERS SHALL BE SCARIFIED PRIOR TO BACKFILLING.
16. ALL STRAPPING AND TOP 2/3 OF WIRE BASKET MUST BE CUT AWAY AND REMOVED FROM ROOT BALL PRIOR TO BACKFILLING PLANTING PIT. REMOVE TOP 1/3 OF THE BURLAP FROM ROOT BALL.
17. FOR NEW PLANTING AREAS, REMOVE ALL PAVEMENT, GRAVEL SUB-BASE AND CONSTRUCTION DEBRIS; REMOVE COMPACTED SOIL AND ADD 24" NEW TOPSOIL OR UNCOMPACT AND AMEND THE TOP 24" OF EXISTING SOIL TO MEET TOPSOIL PLANTING MIX STANDARDS FOR TREES.
18. THE CONTRACTOR SHALL BE RESPONSIBLE FOR INSTALLING TREES AND SHRUBS THAT WILL MEET BOTH MINIMUM SIZE AND SPACING FOR TREE AND UNIFIED DEVELOPMENT ORDINANCE COMPLIANCE. FAILURE TO INSTALL PLANT MATERIAL PER THIS PLAN WILL JEOPARDIZE ISSUANCE OF FINAL CERTIFICATE OF OCCUPANCY. CONTRACTOR SHALL BE RESPONSIBLE FOR SCHEDULING INSPECTIONS OF PLANT MATERIAL.
19. THE CONTRACTOR SHALL INSTALL BLACK FABRIC MESH UNDER PLANTING BED MULCH TO PREVENT WEED GROWTH.
20. CONTRACTOR SHALL MAINTAIN LANDSCAPING FOR AT LEAST 30 DAYS AFTER SODDING AND PLANTING SHRUBS, AND 60 DAYS AFTER SEEDING, OR AS LONG AS IS NECESSARY TO ESTABLISH UNIFORM STAND OF THE SPECIFIED GRASSES, OR UNTIL SUBSTANTIAL COMPLETION OF THE PROJECT, OR UNTIL ACCEPTANCE OF THE LAWNS AND SHRUBS, WHICHEVER IS LATER.
21. ALL LANDSCAPE SHALL BE MAINTAINED IN PERPETUITY.

ALL CONSTRUCTION TO BE IN ACCORDANCE WITH ALL TOWN OF KNIGHTDALE AND/OR NCDOT STANDARDS AND SPECIFICATIONS.

EXISTING CONDITION NOTES:

1. EXISTING INFORMATION SHOWN FROM AN ALTA/ACSM LAND TITLE SURVEY PROVIDED BY CHANDLER LAND SURVEYING, INC., 83 ADAMS POINT DRIVE, GARNER, NC 27529, PHONE: 919-291-9163 AND DATED NOVEMBER 21, 2017 AND TAKEN FROM TOWN OF KNIGHTDALE APPROVED CONSTRUCTION PLANS FOR PARKSTONE AT KNIGHTDALE (KHA #017254001) DATED NOVEMBER 15, 2016, FROM TOWN OF KNIGHTDALE APPROVED CONSTRUCTION PLANS FOR PARKSTONE VILLAGE (KHA #017254009) DATED NOVEMBER 8, 2019 AND PROVIDED BY KIMLEY-HORN AND ASSOCIATES, 421 FAYETTEVILLE STREET, SUITE 600, RALEIGH, NC 27601, PHONE: 919-677-2000, AND FROM A SANITARY SEWER ELEVATION SURVEY PROVIDED BY RWK, PA, 101 W. MAIN ST SUITE 202M GARNER, NC 27529, PHONE: 919-779-4854 AND DATED NOVEMBER 10, 2021.
2. THE SUBJECT PROPERTY IS NOT LOCATED WITHIN A SPECIAL FLOOD HAZARD AREA. IT IS LOCATED IN ZONE X BASED ON THE FLOOD INSURANCE RATE MAP COMMUNITY MAP NUMBER 3720174400K DATED JULY 19, 2022.

a. Town Certification. This design has been reviewed by the Engineer for the Town of Knightdale, and to the best of my knowledge and belief, it conforms to the requirements established in the Standard Specifications of the Town of Knightdale.

By: Samuel A. MacDonald Date: _____
Town Engineer

These plans are approved by the Town of Knightdale and serve as construction plans for this project.

By: Kevin Lewis Date: _____
Administrator

No.	REVISIONS	DATE	BY
4	REVISED PER TOK COMMENTS	04/19/24	MDB
3	REVISED PER TOK COMMENTS	02/27/24	MDB
2	REVISED PER TOK COMMENTS	01/12/24	DPM
1	REVISED PER TOK COMMENTS	9/12/23	ASA

Kimley»Horn
© 2023 KIMLEY-HORN AND ASSOCIATES, INC.
421 FAYETTEVILLE STREET, SUITE 600, RALEIGH, NC 27601
PHONE: 919-677-2000 FAX: 919-677-2050
WWW.KIMLEY-HORN.COM
#F-0102

NORTH CAROLINA REGISTERED LANDSCAPE ARCHITECT SEAL 2983 MATTHEW R. GROSS 04/26/2024

KHA PROJECT	017254013
DATE	06/26/2023
SCALE	AS SHOWN
DESIGNED BY	AWF
DRAWN BY	AWF
CHECKED BY	MRG

LANDSCAPE DETAILS

DEWITT KNIGHTDALE
PREPARED FOR
WIDEWATERS
TOWN OF KNIGHTDALE NORTH CAROLINA

SHEET NUMBER
LS2.0

Plotted By:Barnes, Michael Sheet Set:DeWitt Knightdale Layout:LS2.0 LANDSCAPE DETAILS April 26, 2024 12:20:19pm K:\RAL_LDEV\017254013_DeWitt Knightdale\Planning Phase\15_CAD Files\PlanSheets\LS\1 LANDSCAPE DETAILS.dwg
This document, together with the concepts and designs presented herein, as an instrument of service, is intended only for the specific purpose and client for which it was prepared. Reuse of and improper reliance on this document without written authorization and adaptation by Kimley-Horn and Associates, Inc. shall be without liability to Kimley-Horn and Associates, Inc.

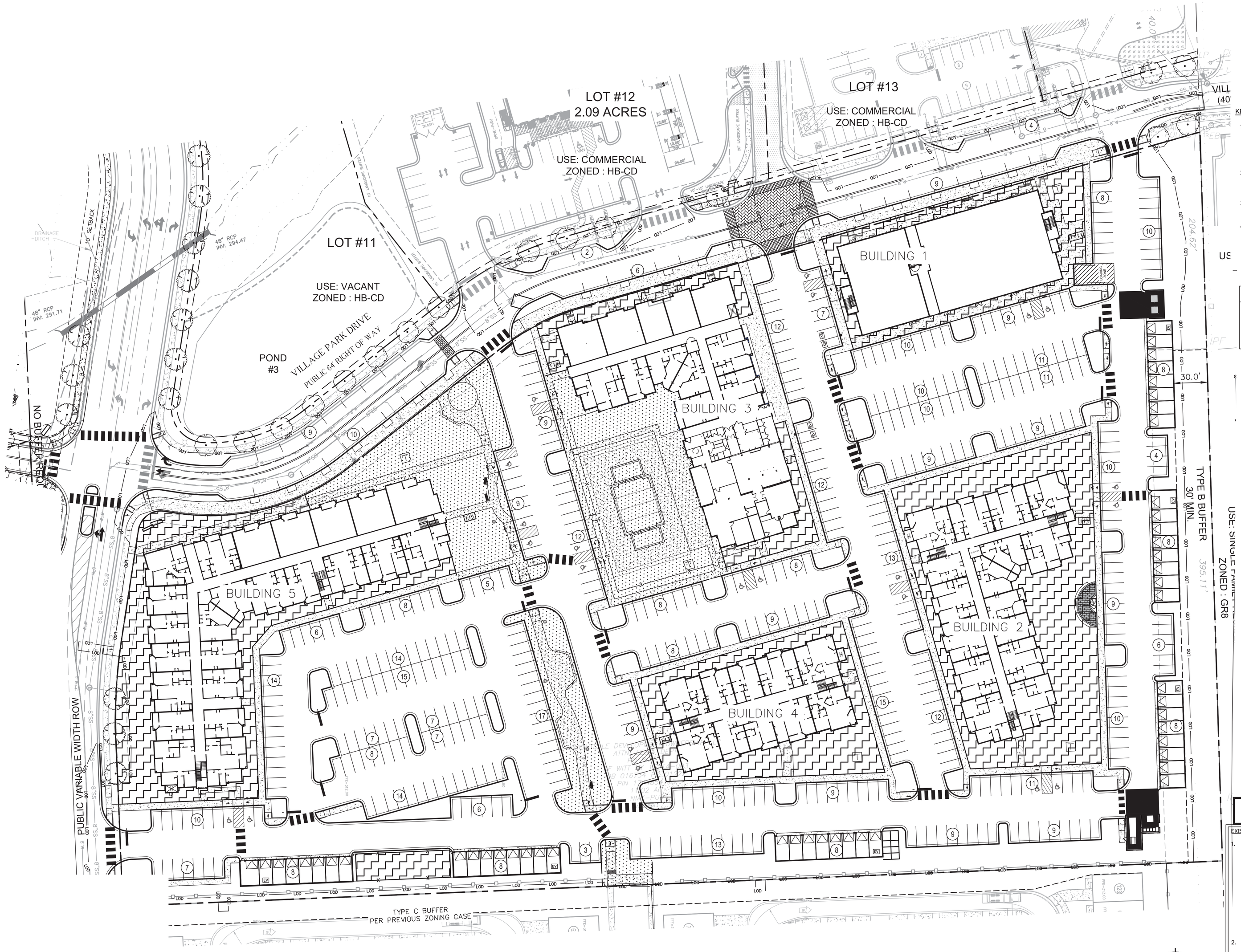

LEGEND:

PASSIVE OPEN SPACE

ACTIVE OPEN SPACE

KEY OPEN SPACE NOTES:

1. THE RECREATIONAL AND ACTIVE OPEN SPACE AREAS, LOCATIONS AND SIZES SHOWN ON THIS PLAN ARE PRELIMINARY IN NATURE AND ARE SUBJECT TO CHANGE PENDING THE FINAL SITE PLAN LAYOUT FOR THE TOWN HOME DEVELOPMENT.
2. THE ACTIVE OPEN SPACE AREAS MAY INCLUDE PROGRAM ELEMENTS SUCH AS A DOG PARK, RESIDENT GATHER AREA(S), A POOL AERA, AND GRILL/PICNIC AREA(S).
3. THE MAXIMUM AVERAGE GRADIENT WITHIN THE ACTIVE OPEN SPACE AREAS WILL NOT EXCEED 7.5%.
4. OPEN SPACE CALCULATIONS AND PERCENTAGES WILL COMPLY WITH THE APPROVED MASTER PLAN, ALTHOUGH EXACT CONFIGURATIONS, LOCATION AND SIZE OF EACH INDIVIDUAL AREA WILL BE CONFIRMED AND APPROVED IN CONJUNCTION WITH THE FINAL SITE PLAN APPLICATION.

REQUIRED RECREATIONAL OPEN SPACE: 97,418 SF
REQUIRED ACTIVE OPEN SPACE (50% MIN): 97,418 SF TOTAL PROVIDED ACTIVE OPEN SPACE: 42,640 SF (51% OF REQUIRED)
REQUIRED PASSIVE OPEN SPACE (UPTO 50%) 97,418 SF TOTAL PROVIDED PASSIVE OPEN SPACE: 58,140 SF (69% OF REQUIRED)
TOTAL PROVIDED OPEN SPACE: 100,780 SF (103% OF REQUIRED)

ALL CONSTRUCTION TO BE IN ACCORDANCE WITH ALL TOWN OF KNIGHTDALE AND/OR NCDOT STANDARDS AND SPECIFICATIONS.

EXISTING CONDITION NOTES:

1. EXISTING INFORMATION SHOWN FROM AN ALTA/ACSM LAND TITLE SURVEY PROVIDED BY CHANDLER LAND SURVEYING, INC., 83 ADAMS POINT DRIVE, GARNER, NC 27529, PHONE: 919-291-9163 AND DATED NOVEMBER 21, 2017 AND TAKEN FROM TOWN OF KNIGHTDALE APPROVED CONSTRUCTION PLANS FOR PARKSTONE AT KNIGHTDALE (KHA #017254001) DATED NOVEMBER 15, 2016, FROM TOWN OF KNIGHTDALE APPROVED CONSTRUCTION PLANS FOR PARKSTONE VILLAGE (KHA #017254009) DATED NOVEMBER 8, 2019 AND PROVIDED BY KIMLEY-HORN AND ASSOCIATES, 421 FAYETTEVILLE STREET, SUITE 600, RALEIGH, NC 27601, PHONE: 919-677-2000, AND FROM A SANITARY SEWER ELEVATION SURVEY PROVIDED BY RWK, PA, 101 W. MAIN ST SUITE 202M GARNER, NC 27529, PHONE: 919-779-4854 AND DATED NOVEMBER 10, 2021.
2. THE SUBJECT PROPERTY IS NOT LOCATED WITHIN A SPECIAL FLOOD HAZARD AREA. IT IS LOCATED IN ZONE X BASED ON THE FLOOD INSURANCE RATE MAP COMMUNITY MAP NUMBER 3720174400K DATED JULY 19, 2022.

a. Town Certification. This design has been reviewed by the Engineer for the Town of Knightdale, and to the best of my knowledge and belief, it conforms to the requirements established in the Standard Specifications of the Town of Knightdale.

By: Samuel A. MacDonald Date: _____
Town Engineer

These plans are approved by the Town of Knightdale and serve as construction plans for this project.

By: Kevin Lewis Date: _____
Administrator

No.	REVISIONS	DATE	BY
4	REVISED PER TOK COMMENTS	04/19/24	MDB
3	REVISED PER TOK COMMENTS	02/27/24	MDB
2	REVISED PER TOK COMMENTS	01/12/24	DPM
1	REVISED PER TOK COMMENTS	9/12/23	ASA

Kimley»Horn
© 2023 KIMLEY-HORN AND ASSOCIATES, INC.
421 FAYETTEVILLE STREET, SUITE 600, RALEIGH, NC 27601
PHONE: 919-677-2000 FAX: 919-677-2050
WWW.KIMLEY-HORN.COM
#F-0102

NORTH CAROLINA REGISTERED LANDSCAPE ARCHITECT 2981 04/26/2024 MATTHEW R. GROSS

KHA PROJECT 017254013
DATE 06/26/2023
SCALE AS SHOWN
DESIGNED BY KEJ
DRAWN BY KEJ
CHECKED BY COB

OPEN SPACE PLAN

DEWITT KNIGHTDALE

PREPARED FOR
WIDEWATERS

TOWN OF KNIGHTDALE NORTH CAROLINA

SHEET NUMBER
LS3.0

Plotted By: Barnes, Michael Street Set: DeWitt Knightdale Layout: C5.0 OPEN SPACE PLAN Apr 26, 2024 - 12:20:46pm K:\RAL_LDE\017254013_DeWitt Knightdale\Planning Phase\15_CAD Files\PlanSheets\C5.0 OPEN SPACE PLAN.dwg
This document, together with the concepts and designs presented herein, as an instrument of service, is intended only for the specific purpose and client for which it was prepared. Reuse of and improper reliance on this document without written authorization and adaptation by Kimley-Horn and Associates, Inc. shall be without liability to Kimley-Horn and Associates, Inc.

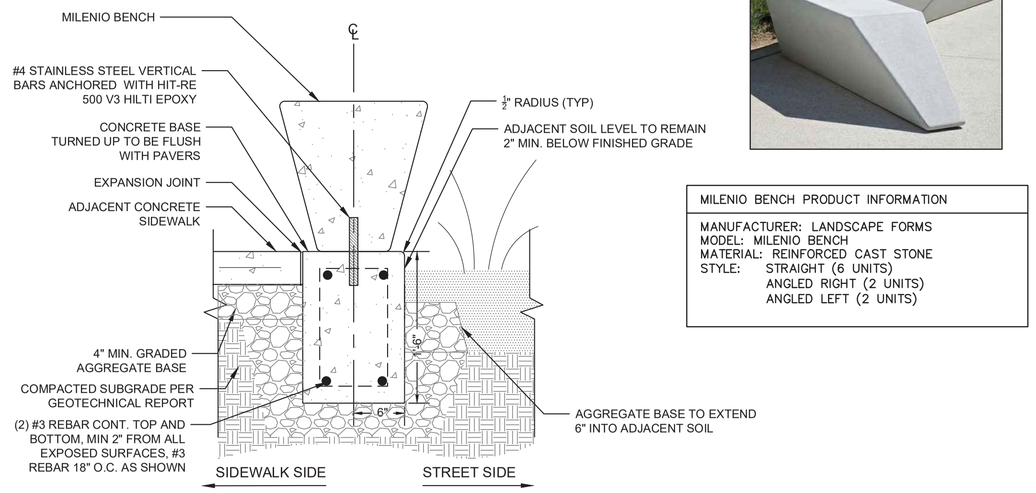

MILENIO BENCH PRODUCT INFORMATION
MANUFACTURER: LANDSCAPE FORMS MODEL: MILENIO BENCH MATERIAL: REINFORCED CAST STONE STYLE: STRAIGHT (6 UNITS) ANGLED RIGHT (2 UNITS) ANGLED LEFT (2 UNITS)

1 L3.1 MILENIO BENCH
NOT TO SCALE



ALUMINUM FENCE REQUIREMENTS
STYLE: 2 RAIL MATERIAL: ALUMINUM HEIGHT: 4' COLOR: BLACK NOTE: OWNER TO APPROVE FENCE PRIOR TO ORDERING. FENCE FOOTING TO BE DESIGNED PER MANUFACTURER'S SPECIFICATIONS.

2 L3.1 ALUMINUM FENCE
NOT TO SCALE DETAIL



PRODUCT INFORMATION
MANUFACTURER: GLOBAL INDUSTRIAL MODEL: 4' OUTDOOR PARK BENCH W/ BACK, STEEL SLAT LENGTH: 4' COLOR: BLACK MOUNT: SURFACE MOUNT NOTE: OWNER TO APPROVE BENCH PRIOR TO ORDERING, REFER TO PLAN FOR BENCH LOCATIONS

3 L3.1 BACKED BENCH
NOT TO SCALE DETAIL

a. **Town Certification.** This design has been reviewed by the Engineer for the Town of Knightdale, and to the best of my knowledge and belief, it conforms to the requirements established in the Standard Specifications of the Town of Knightdale.

By: Samuel A. MacDonald Date: _____
Town Engineer

These plans are approved by the Town of Knightdale and serve as construction plans for this project.

By: Kevin Lewis Date: _____
Administrator

No.	REVISIONS	DATE	BY
4	REVISED PER TOK COMMENTS	04/19/24	MDB
3	REVISED PER TOK COMMENTS	02/27/24	MDB
2	REVISED PER TOK COMMENTS	01/12/24	DPM
1	REVISED PER TOK COMMENTS	9/12/23	ASA

Kimley»Horn
© 2023 KIMLEY-HORN AND ASSOCIATES, INC.
421 FAYETTEVILLE STREET, SUITE 600, RALEIGH, NC 27601
PHONE: 919-677-2000 FAX: 919-677-2050
WWW.KIMLEY-HORN.COM
#F-0102

NORTH CAROLINA REGISTERED LANDSCAPE ARCHITECT SEAL 2983 MATTHEW R. GROSS 04/26/2024

KHA PROJECT 017254013
DATE 06/26/2023
SCALE AS SHOWN
DESIGNED BY KEJ
DRAWN BY KEJ
CHECKED BY COB

OPEN SPACE DETAILS

DEWITT KNIGHTDALE
PREPARED FOR WIDEWATERS
TOWN OF KNIGHTDALE NORTH CAROLINA

SHEET NUMBER
LS3.1

Plotted By:Barnes, Michael Sheet Set:DeWitt Knightdale Layout:LS3.1 April 26, 2024 12:20:53pm K:\RAL_LDEV\017254013_DeWitt Knightdale\Planning Phase\15_CAD Files\Plan Sheets\LS3.1 OPEN SPACE DETAILS.dwg
This document, together with the concepts and designs presented herein, as an instrument of service, is intended only for the specific purpose and client for which it was prepared. Reuse of and improper reliance on this document without written authorization and adaptation by Kimley-Horn and Associates, Inc. shall be without liability to Kimley-Horn and Associates, Inc.

This document, together with the concepts and designs presented herein, as an instrument of service, is intended only for the specific purpose and client for which it was prepared. Reuse of and improper reliance on this document without written authorization and adaptation by Kimley-Horn and Associates, Inc. shall be without liability to Kimley-Horn and Associates, Inc.

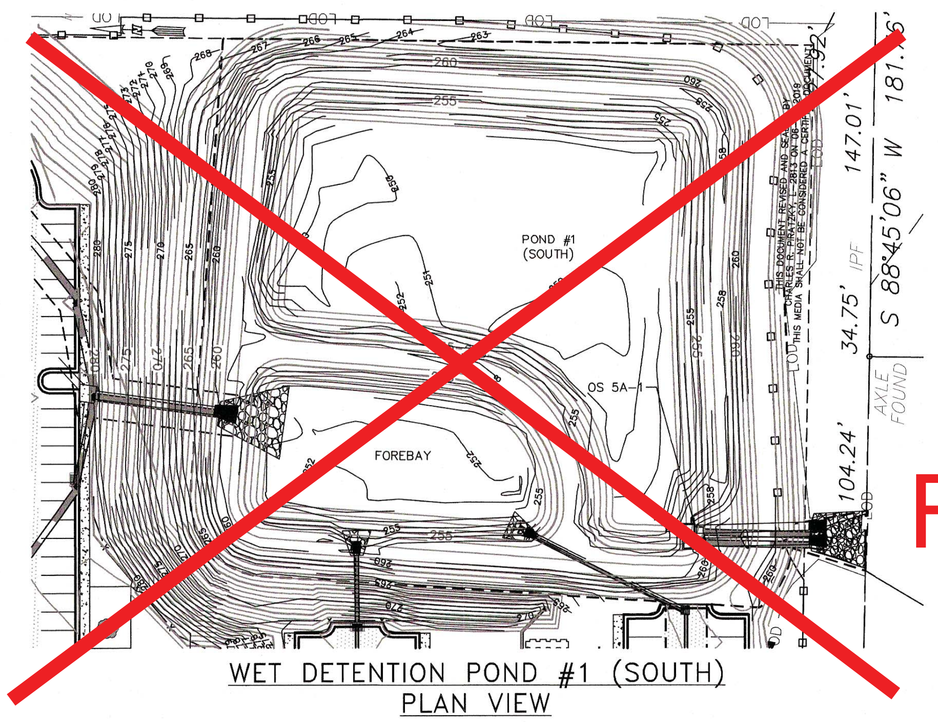

WET DETENTION POND #1 (SOUTH)
PLAN VIEW

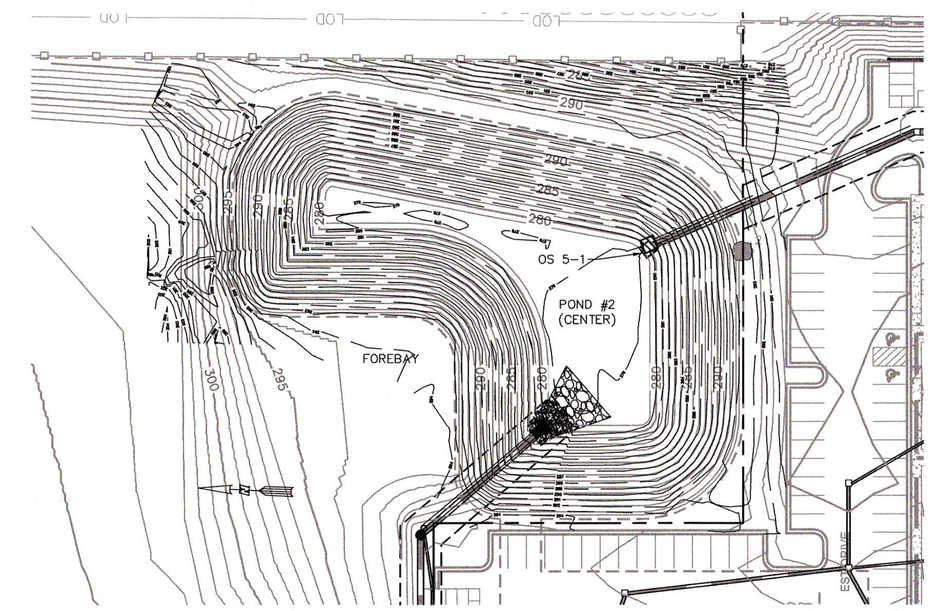

DRY DETENTION POND #2 (CENTER)
PLAN VIEW

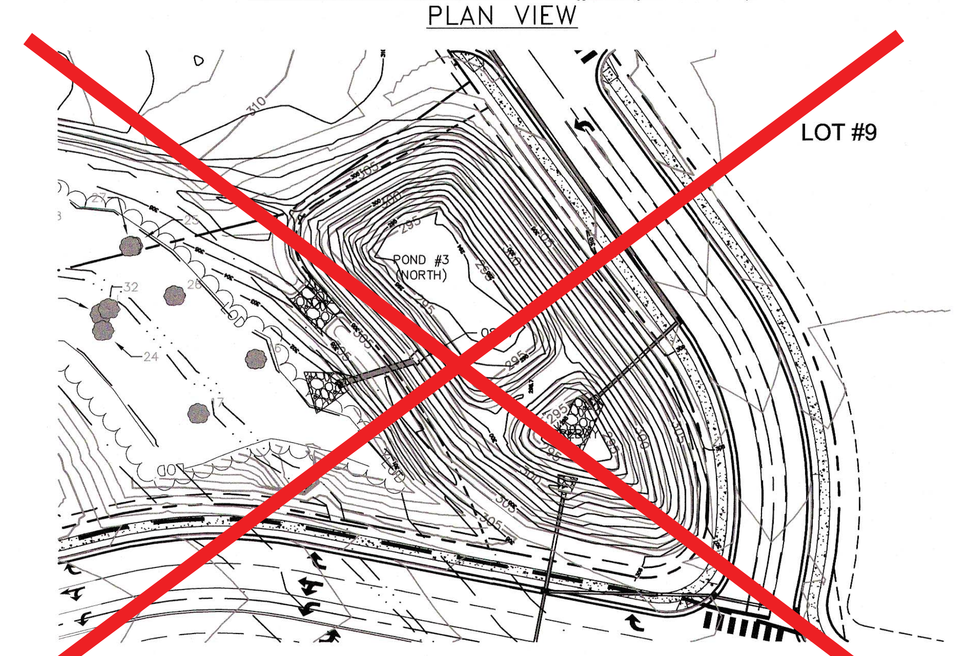

WET DETENTION POND #3 (NORTH)
PLAN VIEW

NORTH

GRAPHIC SCALE IN FEET
0 25 50 100

FOR REFERENCE ONLY

CONTROL STRUCTURE NOTE:
ALL ORIFICES TO HAVE SCREEN INSTALLED OVER OPENINGS TO PREVENT BLOCKAGE.

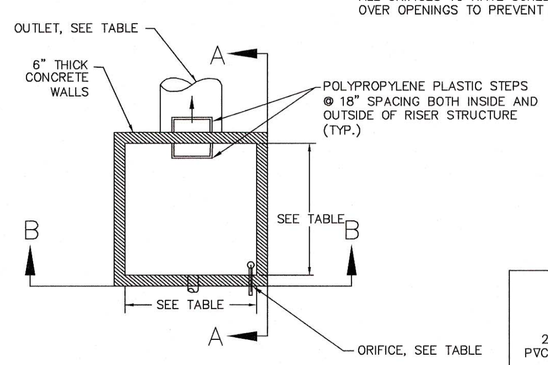

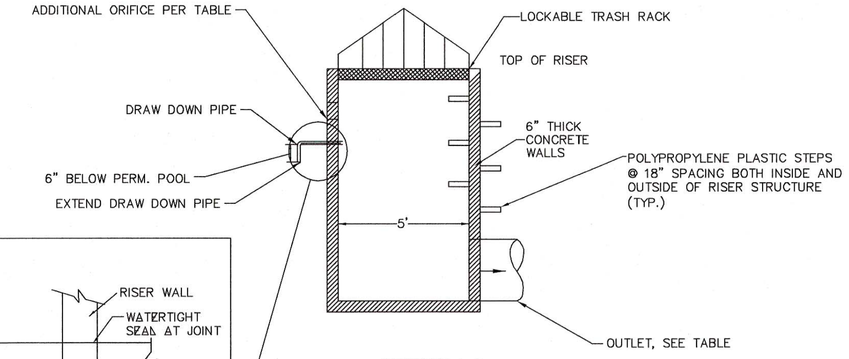

SECTION A-A

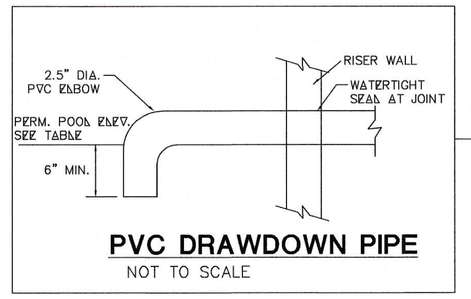

PVC DRAWDOWN PIPE
NOT TO SCALE

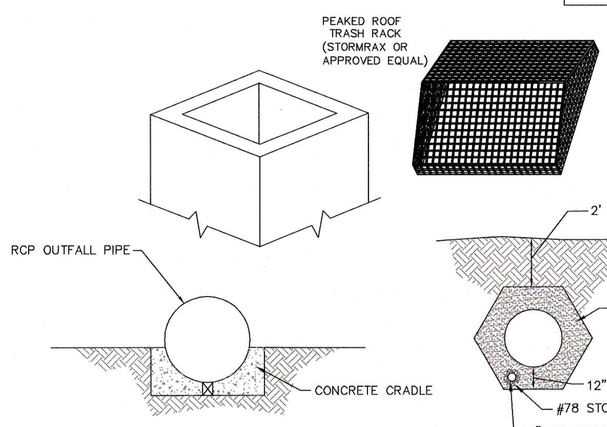

1. BRING GRADE TO SPRING LINE FOR PIPE
2. EXCAVATE TRENCH AS SHOWN AND PLACE PIPE ON SUPPORTS
3. FILL TO SPRINGLINE WITH CONCRETE
4. WRAP PIPE JOINTS WITH A NONWOVEN GEOTEXTILE

TYPICAL CRADLE DETAIL
NOT TO SCALE

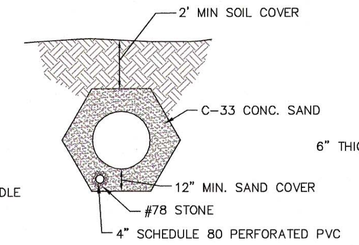

DRILL 3/8" HOLES AT 90° 6" O.C. IN SECTION THRU GRAVEL. MINIMUM 12" SAND COVER OVER #78 STONE ON ALL SIDES. EXTEND SOLID PIPE TO OUTLET AND PLACE VARMINT GUARD AS NEEDED.

FILTER DIAPHRAGM CROSS SECTION B-B
NOT TO SCALE

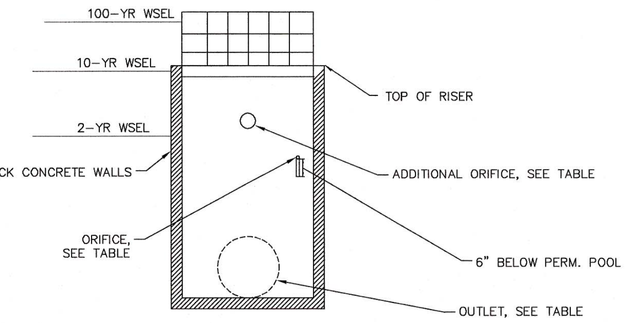

SECTION B-B

DETENTION CONTROL STRUCTURE
NOT TO SCALE

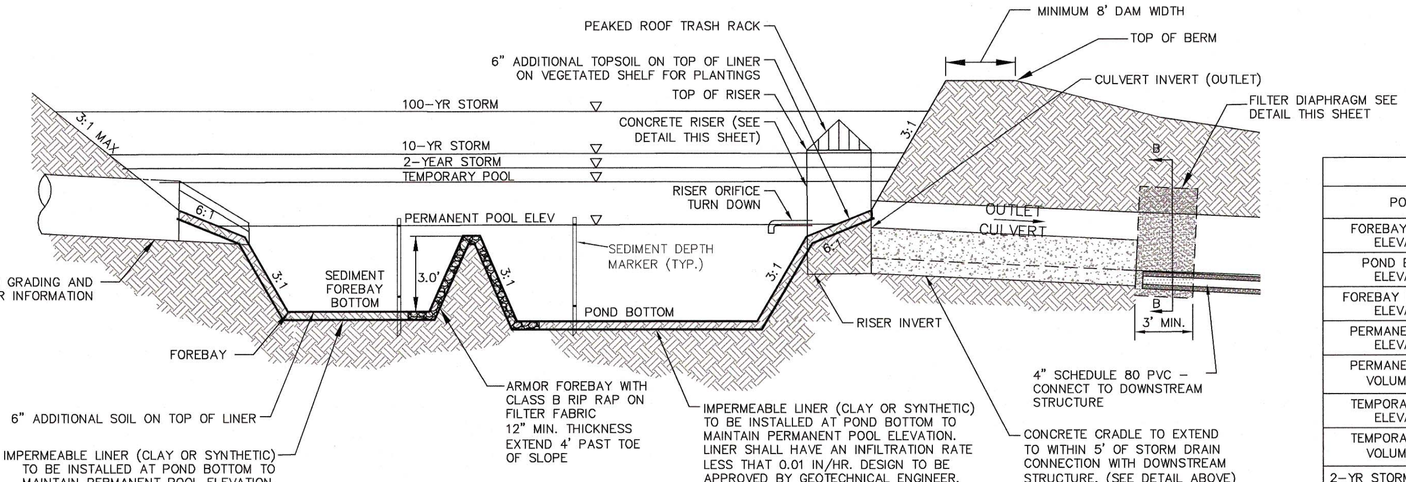

WET DETENTION POND TYPICAL CROSS SECTION
NOT TO SCALE

DETENTION POND TABLE			
POND	1 (SOUTH)	2 (CENTER)	3 (NORTH)
FOREBAY BOTTOM ELEVATION	~~251.00~~ 251.20	~~279.00~~ 278.72	~~295.00~~ 294.80
POND BOTTOM ELEVATION	~~251.00~~ 249.34	~~279.00~~ 278.72	~~295.00~~ 293.80
FOREBAY BERM TOP ELEVATION	~~256.50~~ 257.60	N/A (DRY POND)	~~299.50~~ 298.70
PERMANENT POOL ELEVATION	~~257.00~~ 257.15	N/A (DRY POND)	~~302.50~~ 302.40
PERMANENT POOL VOLUME (CF)	238,047	N/A (DRY POND)	68,902
TEMPORARY POOL ELEVATION	259.30	N/A (DRY POND)	303.61
TEMPORARY POOL VOLUME (CF)	130,852	N/A (DRY POND)	27,135
2-YR STORM ELEVATION	~~260.83~~ 260.86	~~286.91~~ 286.69	~~304.87~~ 304.69
10-YR STORM ELEVATION	~~261.03~~ 261.08	~~289.86~~ 289.63	~~304.87~~ 305.11
100-YR STORM ELEVATION	~~261.89~~ 261.95	~~292.57~~ 292.38	~~305.30~~ 305.57
TOP OF BERM	~~263.00~~ 262.62	~~293.50~~ 292.95	~~306.00~~ 306.26
CONCRETE RISER	TWO (2) 5'X5' TOP: ~~259.30~~ 260.75 BTM: ~~257.00~~ 257.20	~~6'X6'~~ 7'x7' TOP: ~~291.00~~ 291.50 BTM: ~~279.00~~ 278.85	6'X6' TOP: ~~304.50~~ 305.40 BTM: ~~302.00~~ 302.00
RISER ORIFICE TURN DOWN	DIAMETER: ~~3.75"~~ 5" INV: ~~257.00~~ 257.15	N/A (DRY POND)	DIAMTER: 2.5" INV: ~~302.50~~ 302.40
ADDITIONAL ORIFICE/WEIR	RECTANGULAR ORIFICE LENGTH: 0.2'X1.0' INV: 258.00	~~CIRCULAR~~ ORIFICE SQUARE SIZE: 15"x 12" INV: ~~279.00~~ 278.90	RECTANGULAR WEIRS (TWO) LENGTH: 5.0' INV: ~~303.01~~ 303.65 & 304.50
RISER CULVERT (OUTLET)	DIAMETER: TWO (2) 36" INV: ~~257.00~~ 257.20	DIAMETER: 36" INV: ~~279.00~~ 278.85	DIAMETER: 36" INV: ~~302.00~~ 302.00

SURVEY NOTE:
EXISTING SITE AND TOPOGRAPHIC INFORMATION SHOWN BASED ON TOPOGRAPHIC SURVEY RECEIVED 8/28/18, 6/11/19, & 8/1/19 PROVIDED BY RWK, PA ENGINEERING & SURVEYING.

AS-BUILT DRAWING
This as-built drawing has been prepared based on information submitted, in part, by others. While this information is believed to be reliable, Kimley - Horn and Associates is not responsible for errors or omissions which may have been incorporated into this document as a result.

a. **Town Certification.** This design has been reviewed by the Engineer for the Town of Knightdale, and to the best of my knowledge and belief, it conforms to the requirements established in the Standard Specifications of the Town of Knightdale.
By: Samuel A. MacDonald Date: _____
Town Engineer
These plans are approved by the Town of Knightdale and serve as construction plans for this project.
By: Kevin Lewis Date: _____
Administrator

No.	REVISIONS	DATE	BY

Kimley»Horn
© 2019 KIMLEY-HORN AND ASSOCIATES, INC.
421 FAYETTEVILLE STREET, SUITE 600, RALEIGH, NC 27601
PHONE: 919-835-1494 FAX: 919-653-5847
WWW.KIMLEY-HORN.COM

KHA PROJECT	017284001
DATE	08/13/2019
SCALE	AS SHOWN
DESIGNED BY	BJC
DRAWN BY	CTM
CHECKED BY	COB

PARKSTONE- KNIGHTDALE
PREPARED FOR
Widewaters
KNIGHTDALE NORTH CAROLINA

NORTH CAROLINA PROFESSIONAL ENGINEER SEAL 032582 CHRISTOPHER T. MOSS 8/13/19

POND DETAILS

SHEET NUMBER
C-707

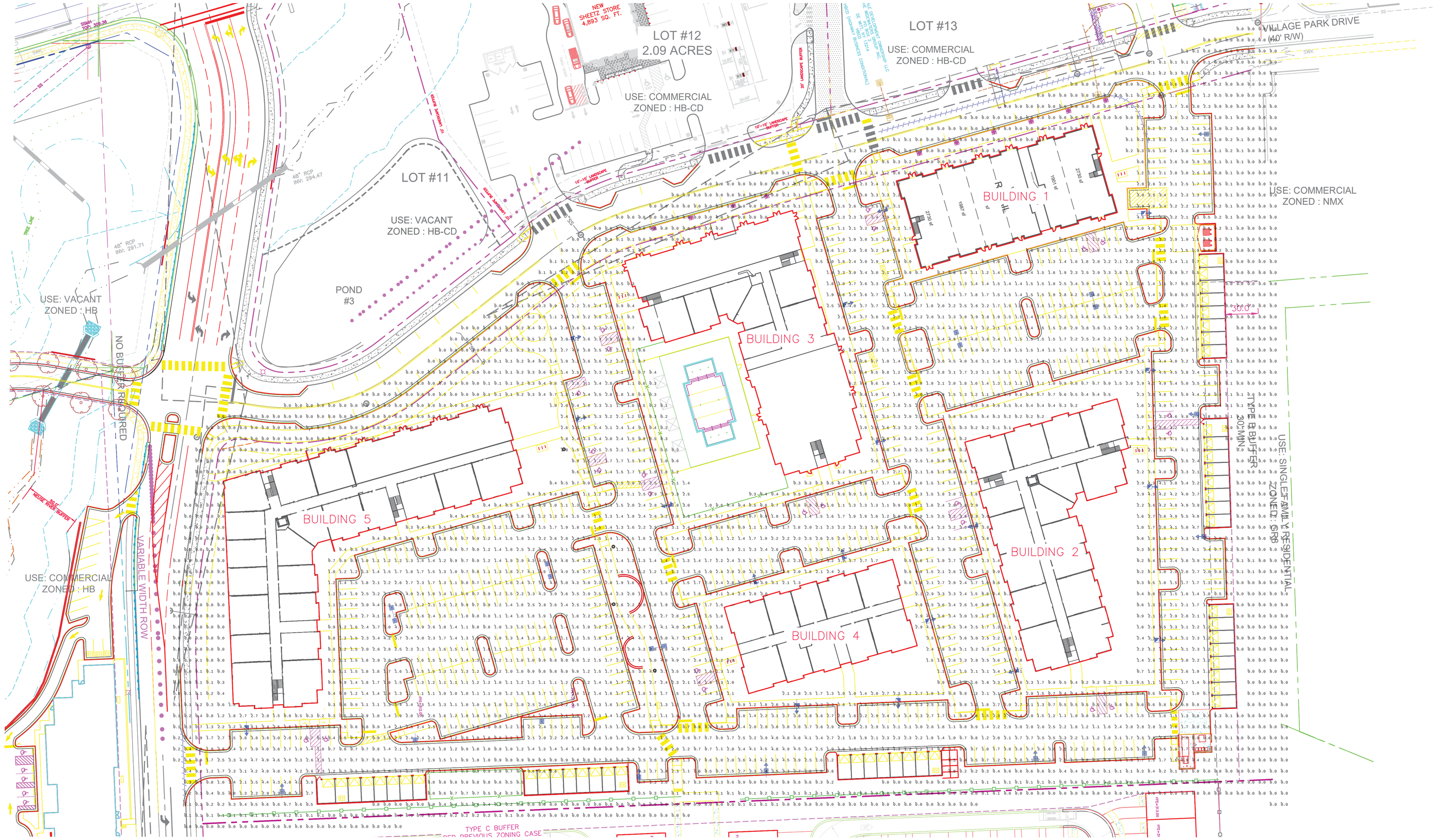

Calculation Summary								
Label	Units	Avg	Max	Min	Avg/Min	Max/Min	PtSpcLr	PtSpcTb
MIXED USE PARKING	Fc	2.24	5.0	0.2	11.20	25.00	10	10
RESIDENTIAL PARKING	Fc	2.11	5.9	0.3	7.03	19.67		

Luminaire Schedule						
KNIGHTDALE, NC PLEASE CONTACT STEVE VARDEMAN AT SMVARDEMAN@GMAIL.COM						
Symbol	Qty	Label	Lum. Lumens	LLF	Description	Lum. Watts
	5	A	17636	0.950	MRS-LED-18L-SIL-5W-40-70CRI 25' MOUNTING HEIGHT	135
	2	B	17636	0.950	MRS-LED-18L-SIL-5W-40-70CRI 25' MOUNTING HEIGHT	135
	8	C	11444	0.950	MRS-LED-18L-SIL-FT-40-70CRI-IL 25' MOUNTING HEIGHT	135
	18	D	17682	0.950	MRS-LED-18L-SIL-FT-40-70CRI 25' MOUNTING HEIGHT	135

- DUE TO CHANGING LIGHTING ORDINANCES IT IS THE CONTRACTORS RESPONSIBILITY TO SUBMIT THE SITE PHOTOMETRICS AND LUMINAIRE SPECS TO THE LOCAL INSPECTOR BEFORE ORDERING TO ENSURE THIS PLAN COMPLIES WITH LOCAL LIGHTING ORDINACES.
- THIS LIGHTING DESIGN IS BASED ON INFORMATION SUPPLIED BY OTHERS. CHANGES IN ELECTRICAL SUPPLY, AREA GEOMETRY AND OBJECTS WITHIN THE LIGHTED AREA MAY PRODUCE ILLUMINATION VALUES DIFFERENT FROM THE PREDICTED RESULTS SHOWN ON THIS LAYOUT.
- THIS LAYOUT IS BASED ON .IES FILES THAT WERE LAB TESTED OR COMPUTER GENERATED. ACTUAL RESULTS MAY VARY.

Town Certification. This design has been reviewed by the Engineer for the Town of Knightdale, and to the best of my knowledge and belief, it conforms to the requirements established in the Standard Specifications of the Town of Knightdale.

By: Samuel A. MacDonald Date: _____
Town Engineer

These plans are approved by the Town of Knightdale and serve as construction plans for this project.

By: Kevin Lewis Date: _____
Administrator

INNOVATIVE LIGHTING SOLUTIONS

STEVE VARDEMAN

817.925.7322

1300 JENKINS RD.

ALEDO, TX 76008

Project:

KNIGHTDALE, NC

SCALE: 1"= 40'

Notes:

REV 1: 6/22/23

PRICING CONTACT:
STEVE VARDEMAN
817-925-7322

FILE:

KNIGHTDALE.agi

Date:

1-25-22

Plotted By:Fullerton, Adam Sheet Set:DeWitt Knightdale Layout:L2.0 LIGHTING DETAILS January 26, 2024 09:58:07am K:\RAL_LDEV\17254013_dewitt knightdale\planning phase\L5_cad files\plansheets\L2.0 LIGHTING DETAILS.dwg
This document, together with the concepts and designs presented herein, as an instrument of service, is intended only for the specific purpose and client for which it was prepared. Reuse of and improper reliance on this document without written authorization and adaptation by Kimley-Horn and Associates, Inc. shall be without liability to Kimley-Horn and Associates, Inc.

Catalog #: _____ Project: _____

Prepared By: _____ Date: _____ Type: _____

Mirada Small Area (MRS)

Outdoor LED Area Light

IP66 IK08



OVERVIEW	
Lumen Package	6,000 - 24,000
Wattage Range	41 - 196
Efficacy Range (LPW)	112 - 156
Fixture Weight lbs (kg)	20 (9.1)

QUICK LINKS

Ordering Guide | Performance | Photometrics | Dimensions

FEATURES & SPECIFICATIONS

Construction
- Rugged die-cast aluminum housing contains factory prewired driver and optical unit. Cast aluminum wiring access door located underneath.
- Fixtures are finished with LSI's DuraGrip® polyester powder coat finishing process. The DuraGrip finish withstands extreme weather changes without cracking or peeling. Other standard LSI finishes available. Consult factory.
- Shipping weight: 27 lbs in carton.

Optical System
- State-of-the-Art one piece silicone optic sheet delivers industry leading optical control with an integrated gasket to provide IP66 rated seal.
- Proprietary silicone refractor optics provide exceptional coverage and uniformity in distribution types 2, 3, 5W, and FT.
- Silicone optical material does not yellow or crack with age and provides a typical light transmittance of 93%.
- Zero uplight.
- Available in 5000K, 4000K, and 3000K color temperatures per ANSI C78.377.
- Minimum CRI of 70.
- Integral louver (IL) and house-side shield (IH) options available for improved backlight control without sacrificing street side performance. See page 3 for more details.

Electrical
- High-performance driver features over-voltage, under-voltage, short-circuit and over temperature protection.
- 0-10V dimming (10% - 100%) standard.
- Standard Universal Voltage (120-277 VAC) Input 50/60 Hz or optional High Voltage (347-480 VAC).
- L70 Calculated Life: >60k Hours
- Total harmonic distortion: <20%
- Operating temperature: -40°C to +50°C (-40°F to +122°F).
- Power factor: >.90
- Input power stays constant over life.
- Field replaceable 10kV surge protection device meets a minimum Category C Low operation (per ANSI/IEEE C62.41.2).
- High-efficacy LEDs mounted to metal-core circuit board to maximize heat dissipation
- Driver is fully encased in potting material for moisture resistance and complies with FCC standards. Driver and key electronic components can easily be accessed.

Controls
- Optional integral passive infrared Bluetooth™ motion and photocell sensor. Fixtures operate independently and can be commissioned via iOS or Android configuration app.
- LSI's AirLink™ wireless control system options reduce energy and maintenance costs while optimizing light quality 24/7.

Installation
- Designed to mount to square or round poles.
- A single fastener secures the hinged door, underneath the housing and provides quick & easy access to the electrical compartment.
- Included terminal block accepts up to 12 ga. wire.
- Utilizes LSI's traditional B3 drill pattern.

Warranty
- LSI luminaires carry a 5-year limited warranty. Refer to https://www.lsicorp.com/resources/terms-conditions-warranty/ for more information.

Listings
- Listed to UL 1598 and UL 8750.
- Meets Buy American Act requirements.
- IDA compliant; with 3000K color temperature selection.
- Title 24 Compliant; see local ordinance for qualification information.
- Suitable for wet locations.
- IP66 rated Luminaire per IEC 60598-1.
- 3G rated for ANSI C136.31 high vibration applications are qualified.
- IK08 rated luminaire per IEC 66262 mechanical impact code.
- DesignLights Consortium® Listings in progress.

Specifications and dimensions subject to change without notice.

Type: _____

Mirada Small Area Light (MRS)

Back to Quick Links

ORDERING GUIDE

TYPICAL ORDER EXAMPLE: **MRS LED 18L SIL FT UNV DIM 40 70CRI ALBCS1 BLK IH**

Luminaire Prefix	Light Source	Lumen Package	Lens	Distribution	Orientation[2]	Voltage	Driver
MRS - Mirada Small Area Light	**LED**	**6L** - 6,000 lms **9L** - 9,000 lms **12L** - 12,000 lms **15L** - 15,000 lms **18L** - 18,000 lms **21L** - 21,000 lms **24L** - 24,000 lms Custom Lumen Packages[1]	**SIL** - Silicone	**2** - Type 2 **3** - Type 3 **5W** - Type 5 Wide **FT** - Forward Throw	**(Blank)** - standard **L** - Optics rotated left 90° **R** - Optics rotated right 90°	**UNV** - Universal Voltage (120-277V) **HV** - High Voltage (347-480V)	**DIM** - 0-10V Dimming (0-10%)

Color Temp	Color Rendering	Controls (Choose One)	Finish	Options
5K - 5,000 CCT **4K** - 4,000 CCT **3K** - 3,000 CCT	**70CRI** - 70 CRI	**(Blank)** - None **Wireless Controls System** **ALSC** - AirLink Sunspice Control System **ALSC32** - AirLink Sunspice Control System with 12-20' MH Motion Sensor **ALSC34** - AirLink Sunspice Control System with 25-40' MH Motion Sensor **ALBC31** - AirLink Blue Wireless Motion & Photo Sensor Controller (8-24' MH) **ALBC32** - AirLink Blue Wireless Motion & Photo Sensor Controller (25-40' MH) **Stand-Alone Controls** **EXT** - 0-10v Dimming leads extended to housing exterior **CR7P** - 7 Pin Control Receptacle ANSI C136.41.1 **IMSBT1** - Integral Bluetooth™ Motion and Photocell Sensor (8-24' MH)[3] **IMSBT2** - Integral Bluetooth™ Motion and Photocell Sensor (25-40' MH)[3]	**BLK** - Black **BRZ** - Dark Bronze **GMG** - Gun Metal Gray **GPT** - Graphite **MSV** - Metallic Silver **PLP** - Platinum Plus **SVG** - Satin Verde Green **WHT** - White	**(Blank)** - None **IH** - Integral Houseside Shield[4] **IL** - Integral Louver (Sharp Split Light Cutoff)[4]

Accessory Ordering Information[5]

Controls Accessories	
Description	**Order Number**
Twist Lock Photocell (120V) for use with CR7P	122514
Twist Lock Photocell (208-277) for use with CR7P	122515
Twist Lock Photocell (347V) for use with CR7P	122516
Twist Lock Photocell (480V) for use with CR7P	122518D
AirLink 5 Pin Twist Lock Controller	661409
AirLink 5 Pin Twist Lock Controller	661410
Pole-Mounted Occupancy Sensor (24V)	662284CLR
Shorting Cap for use with CR7P	149328

Mounting Accessories	
Description	**Order Number[6]**
Universal Mounting Bracket	684616CLR
Adjustable Slip Fitter (2" - 2 3/8" Tenon)	688138CLR
Horizontal Slip Fitter (2" - 2 3/8" Tenon)	692761CLR
Quick Mount Pole Bracket (Square Pole)	687073CLR
Quick Mount Pole Bracket (4-5' Round Pole)	689993CLR
15 Tilt Quick Mount Pole Bracket (Square Pole)	688003CLR
15 Tilt Quick Mount Pole Bracket (4-5' Round Pole)	689905CLR
Wall Mount Bracket	382122CLR

Fusing Options[7]	
Description	**Order Number**
Single Fusing (120V)	See Fusing Accessory Guide
Single Fusing (277V)	
Double Fusing (208V, 240V)	
Double Fusing (480V)	
Double Fusing (347V)	

Shielding & Miscellaneous Accessories	
Description	**Order Number**
Integral Louver/Shield	783445
Internal Houseside Shield	783446
10' Linear Bird Spike Kit (2' Recommended per Luminaire)	751602

FOOTNOTES:
1. Custom lumen and wattage packages available, consult factory. Values are within industry standard tolerances but not DLC listed.
2. Not available on "Type SW" distribution.
3. Control device or shorting cap must be ordered separately. See Accessory Ordering Information.
4. "CLR" denotes finish. See Finish options.
5. Accessories are shipped separately and field installed.
6. Fusing must be located in hand hole of pole. See Fusing Accessory Guide for compatability.
7. Accessories are shipped separately for initial configuration. Configuration can be downloaded from your smartphone's native app store.

Type: _____

Mirada Small Area Light (MRS)

OPTICS ROTATION

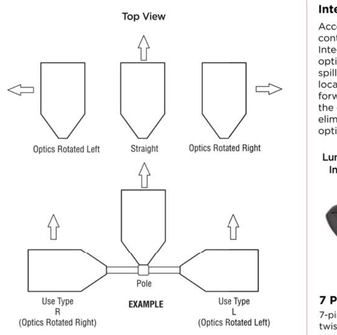

ACCESSORIES/OPTIONS

Integral Louver (IL) and House-Side Shield (IH)

Accessory louver and shield available for improved backlight control without sacrificing street side performance. LSI's Integral Louver (L) and Integral House-Side Shield (IH) options deliver backlight control that significantly reduces spill light behind the poles for applications with pole locations close to adjacent properties. The design maximizes forward reflected light while reducing glare, maintaining the optical distribution selected, and most importantly eliminating light trespass. Both options rotate with the optical distribution.

Luminaire Shown with Integral Louver (IL)



Luminaire Shown with IMSBT Option



7 Pin Photoelectric Control

7-pin ANSI C136.41-2013 control receptacle option available for twist lock photocontrols or wireless control modules. Control accessories sold separately. Dimming leads from the receptacle will be connected to the driver dimming leads (Consult factory for alternate wiring).

Luminaire Shown with CR7P



Type: _____

Mirada Small Area Light (MRS)

Back to Quick Links

PERFORMANCE

Delivered Lumens*

Lumen Package	Distribution	CRI	3000K CCT			4000K CCT			5000K CCT			Wattage
			Delivered Lumens	Efficacy	BUG Rating	Delivered Lumens	Efficacy	BUG Rating	Delivered Lumens	Efficacy	BUG Rating	
6L	2	70	6045	148	B2-U0-G1	6268	154	B2-U0-G1	6253	153	B2-U0-G1	41
	3		6145	151	B1-U0-G2	6372	156	B1-U0-G2	6357	156	B1-U0-G2	
	SW		5812	142	B3-U0-G1	6.026	148	B3-U0-G1	6012	147	B3-U0-G1	
	FT		5947	146	B1-U0-G1	6166	151	B1-U0-G1	6152	151	B1-U0-G1	
9L	2	70	9091	145	B2-U0-G2	9484	152	B2-U0-G2	9462	151	B2-U0-G2	63
	3		9241	148	B2-U0-G2	9641	154	B2-U0-G2	9619	154	B2-U0-G2	
	SW		8740	140	B3-U0-G2	9.118	146	B3-U0-G2	9097	144	B3-U0-G2	
	FT		8943	143	B2-U0-G2	9330	149	B2-U0-G2	9308	149	B2-U0-G2	
12L	2	70	12132	141	B3-U0-G2	12665	148	B3-U0-G2	12514	146	B3-U0-G2	86
	3		12333	143	B2-U0-G2	12894	150	B2-U0-G2	12721	148	B2-U0-G2	
	SW		11664	136	B4-U0-G2	12195	142	B4-U0-G2	12031	140	B4-U0-G2	
	FT		11935	139	B2-U0-G2	12479	145	B2-U0-G2	12311	143	B2-U0-G2	
15L	2	70	14220	128	B3-U0-G2	15167	137	B3-U0-G2	14488	131	B3-U0-G2	111
	3		14938	135	B2-U0-G2	15933	144	B2-U0-G2	15219	137	B2-U0-G2	
	SW		14304	129	B4-U0-G2	15257	137	B4-U0-G2	14574	131	B4-U0-G2	
	FT		14342	129	B2-U0-G2	15297	138	B2-U0-G2	14612	132	B2-U0-G2	
18L	2	70	16438	122	B3-U0-G3	17532	130	B3-U0-G3	16747	124	B3-U0-G3	135
	3		17267	128	B3-U0-G3	18417	137	B3-U0-G3	17592	131	B3-U0-G3	
	SW		16535	123	B4-U0-G2	17636	133	B5-U0-G3	16846	125	B4-U0-G2	
	FT		16578	123	B3-U0-G3	17682	131	B3-U0-G3	16890	125	B3-U0-G3	
21L	2	70	19488	118	B3-U0-G3	20786	126	B5-U0-G3	19885	120	B3-U0-G3	165
	3		20472	124	B3-U0-G3	21835	132	B3-U0-G3	20887	126	B3-U0-G3	
	SW		19604	119	B5-U0-G3	20.909	126	B5-U0-G3	19973	121	B5-U0-G3	
	FT		19655	119	B3-U0-G4	20964	127	B3-U0-G4	20025	121	B3-U0-G4	
24L	2	70	21976	112	B3-U0-G3	23439	120	B3-U0-G3	22396	114	B3-U0-G3	196
	3		23085	118	B3-U0-G3	24622	126	B3-U0-G3	23519	120	B3-U0-G3	
	SW		22105	113	B5-U0-G3	23578	120	B5-U0-G3	22522	115	B5-U0-G3	
	FT		22164	113	B3-U0-G3	23640	121	B3-U0-G3	22581	115	B3-U0-G3	

*LEDs are frequently updated therefore values are nominal.

ELECTRICAL DATA (AMPS)*					
Lumens	**120V**	**208V**	**240V**	**277V**	**347V**	**480V**
6L	0.34	0.20	0.17	0.15	0.12	0.09
9L	0.52	0.30	0.26	0.23	0.18	0.13
12L	0.72	0.41	0.36	0.31	0.25	0.18
15L	0.93	0.53	0.46	0.40	0.32	0.23
18L	1.12	0.65	0.56	0.49	0.39	0.28
21L	1.38	0.80	0.69	0.60	0.48	0.34
24L	1.63	0.94	0.82	0.71	0.56	0.41

*Electrical data at 25°C (77°F). Actual wattage may differ by +/-10%.

RECOMMENDED LUMEN MAINTENANCE*					
Ambient Temp	**Lumen Multiplier**				
C	**0 hrs.†**	**25K hrs.†**	**50K hrs.†**	**75K hrs.†**	**100K hrs.†**
0°C - 25°C	100%	95%	89%	84%	79%
40°C	100%	94%	87%	80%	74%

FOOTNOTES:
1. Lumen maintenance values at 25°C are calculated per TM-21 based on LM-80 data and in-situ luminaire testing.
2. In accordance with IESNA TM-21-11, Projected Values represent interpolated value based on time durations that are within six times (6X)the IESNA LM-80-08 total test duration (in hours) for the device under testing (DUT) i.e. the packaged LED chip).
3. In accordance with IESNA TM-21-11, Calculated Values represent time durations that exceed six times NA LM-80-08 total test duration (in hours) for the device under testing (DUT) i.e. the packaged LED chip).

POOL AREA LIGHTS

NLS LIGHTING

ORGANIX ORX-2-PT

ARCHITECTURAL



LED WATTAGE CHART

5K	
350 milliamps	6AW (2100 Lumens)
530 milliamps	9AW (4816 Lumens)
700 milliamps	12AW (6480 Lumens)
1000 milliamps	18AW (9720 Lumens)
1050 milliamps	18AW (9720 Lumens)
1200 milliamps	21AW (11340 Lumens)
1350 milliamps	24AW (12960 Lumens)
1550 milliamps	27AW (14580 Lumens)
1700 milliamps	30AW (16200 Lumens)
1850 milliamps	33AW (17820 Lumens)
2000 milliamps	36AW (19440 Lumens)
2150 milliamps	39AW (21060 Lumens)
2300 milliamps	42AW (22680 Lumens)
2450 milliamps	45AW (24300 Lumens)
2600 milliamps	48AW (25920 Lumens)
2750 milliamps	51AW (27540 Lumens)
2900 milliamps	54AW (29160 Lumens)
3050 milliamps	57AW (30780 Lumens)
3200 milliamps	60AW (32400 Lumens)

Form
- Elegant Die-Cast Aluminum Housing
- Corrosion Resistant Stainless Steel External Hardware
- Sleek, Low Profile Housing
- Spec Grade Performance
- Engineered For Optimum Thermal Management
- 9 Architectural Finishes Standard, RAL Colors Available

Function
- Micro Optics IES Distributions T2, T3, T4, T5
- 0-10V Dimming Drivers THD @ Max Load < 15% Power factor @ Max Load < 0.95
- Amber, 2700K, 3000K, 3500K, 4000K, or 5000K
- 2DL, or 6AL LED Configuration
- CRI 70, 80, or 90
- 5 Mils Powder Coat
- Up to 21,400 Lumens

Reliability
- Silicone Micro Optics
- 5 Year Standard Warranty
- IP67 Optics
- IP66 Fixture

BUY AMERICAN

To ensure the latest BAA/TAA/BABA Standards are being met, please select BAA, TAA, or BABA in the options section. Please contact the factory before placing an order for any NLS products requesting BAA (Buy American Act), TAA (Trade American Act), or BABA (Build America, Buy America).



WX 01.19.24

1

PRODUCT SPECIFICATIONS

DOUBLE ARM POST TOP LUMENS

						LUMEN CCT					
Part Number	5K	4K	3K	5K	4K	3K	5K	4K	3K	WATTS	
DBA12-FT-SIL-5K-70CRI	12132	141	B3-U0-G2	12665	148	B3-U0-G2	12514	146	B3-U0-G2	86	
DBA12-FT-SIL-5K-70CRI	12333	143	B2-U0-G2	12894	150	B2-U0-G2	12721	148	B2-U0-G2		
DBA12-FT-SIL-5K-70CRI	11664	136	B4-U0-G2	12195	142	B4-U0-G2	12031	140	B4-U0-G2		
DBA12-FT-SIL-5K-70CRI	11935	139	B2-U0-G2	12479	145	B2-U0-G2	12311	143	B2-U0-G2		
DBA15-FT-SIL-5K-70CRI	14220	128	B3-U0-G2	15167	137	B3-U0-G2	14488	131	B3-U0-G2	111	
DBA15-FT-SIL-5K-70CRI	14938	135	B2-U0-G2	15933	144	B2-U0-G2	15219	137	B2-U0-G2		
DBA15-FT-SIL-5K-70CRI	14304	129	B4-U0-G2	15257	137	B4-U0-G2	14574	131	B4-U0-G2		
DBA15-FT-SIL-5K-70CRI	14342	129	B2-U0-G2	15297	138	B2-U0-G2	14612	132	B2-U0-G2		
DBA18-FT-SIL-5K-70CRI	16438	122	B3-U0-G3	17532	130	B3-U0-G3	16747	124	B3-U0-G3	135	
DBA18-FT-SIL-5K-70CRI	17267	128	B3-U0-G3	18417	137	B3-U0-G3	17592	131	B3-U0-G3		
DBA18-FT-SIL-5K-70CRI	16535	123	B4-U0-G2	17636	133	B5-U0-G3	16846	125	B4-U0-G2		
DBA18-FT-SIL-5K-70CRI	16578	123	B3-U0-G3	17682	131	B3-U0-G3	16890	125	B3-U0-G3		
DBA21-FT-SIL-5K-70CRI	19488	118	B3-U0-G3	20786	126	B5-U0-G3	19885	120	B3-U0-G3	165	
DBA21-FT-SIL-5K-70CRI	20472	124	B3-U0-G3	21835	132	B3-U0-G3	20887	126	B3-U0-G3		
DBA21-FT-SIL-5K-70CRI	19604	119	B5-U0-G3	20.909	126	B5-U0-G3	19973	121	B5-U0-G3		
DBA21-FT-SIL-5K-70CRI	19655	119	B3-U0-G4	20964	127	B3-U0-G4	20025	121	B3-U0-G4		
DBA24-FT-SIL-5K-70CRI	21976	112	B3-U0-G3	23439	120	B3-U0-G3	22396	114	B3-U0-G3	196	
DBA24-FT-SIL-5K-70CRI	23085	118	B3-U0-G3	24622	126	B3-U0-G3	23519	120	B3-U0-G3		
DBA24-FT-SIL-5K-70CRI	22105	113	B5-U0-G3	23578	120	B5-U0-G3	22522	115	B5-U0-G3		
DBA24-FT-SIL-5K-70CRI	22164	113	B3-U0-G3	23640	121	B3-U0-G3	22581	115	B3-U0-G3		

PRODUCT SPECIFICATIONS

DOUBLE ARM POST TOP B.U.G. RATINGS

						LUMEN CCT					
Part Number	5K	4K	3K	5K	4K	3K	5K	4K	3K	WATTS	
DBA12-FT-SIL-5K-70CRI	B1-U0-G2	B1-U0-G2	B1-U0-G2	B1-U0-G2	B1-U0-G2	B1-U0-G2	B1-U0-G2	B1-U0-G2	B1-U0-G2	86	
DBA12-FT-SIL-5K-70CRI	B1-U0-G2	B1-U0-G2	B1-U0-G2	B1-U0-G2	B1-U0-G2	B1-U0-G2	B1-U0-G2	B1-U0-G2	B1-U0-G2



1 BUILDING 1 - NORTH ELEVATION

Scale: 3/32" = 1'-0"



2 BUILDING 1 - SOUTH ELEVATION

Scale: 3/32" = 1'-0"



3 BUILDING 1 - EAST ELEVATION

Scale: 3/32" = 1'-0"



4 BUILDING 1 - WEST ELEVATION

Scale: 3/32" = 1'-0"

a. **Town Certification.** This design has been reviewed by the Engineer for the Town of Knightdale, and to the best of my knowledge and belief, it conforms to the requirements established in the Standard Specifications of the Town of Knightdale.

By: Samuel A. MacDonald Date: _____
Town Engineer

These plans are approved by the Town of Knightdale and serve as construction plans for this project.

By: Kevin Lewis Date: _____
Land Use Administrator

PLANWORX
ARCHITECTURE
5711 SIX FORKS ROAD, SUITE 100
RALEIGH NC 27609
website www.planworx.com

PLANWORX ARCHITECTURE, PA
REGISTERED ARCHITECTURAL CORPORATION
CERT. NO. 50909
N.C.
RALEIGH, NC

THE DEWITT | KNIGHTDALE

KNIGHTDALE DEVELOPMENT OWNERSHIP, LLC

901 PARKSTONE TOWNE BLVD.,
KNIGHTDALE, NC 27545

DESIGN DEVELOPMENT

NOT FOR CONSTRUCTION

PROGRESS DATE:			
ISSUE DATE:			09.14.2023
REVISIONS NUMBER	DATE	INITIALS	DESCRIPTION

PROJECT NO: 005221
DRAWN BY: AE, CL
CHECKED BY: BN

SHEET TITLE:
Building 1
Elevations

SHEET NUMBER:
A200

1. All drawings are to be coordinated with all site information by owner and contractor, and applicable codes.
2. Contractor is to notify architect immediately of conditions or items varying from depicted information.
3. Planworx Architecture, P.A. is not responsible for constructed variations from the information depicted.
4. Planworx Architecture, P.A. will not assume any liability for expenses associated with errors and omissions on these drawings unless offset by verified construction savings as a result of planworx architecture, P.A. Design.
5. Planworx Architecture, P.A. retains ownership of all of designs depicted and implied herein.
6. Planworx Architecture, P.A. is not responsible for estimating, maintaining, or regulating construction costs associated with these plans.

© Copyright 2023 - PLANWORX ARCHITECTURE, P.A. All rights reserved. Reproduction of this sheet, in whole or in part, is strictly prohibited. Plans may be used once by client. Unauthorized use strictly prohibited. PLANS NOT VALID FOR CONSTRUCTION W/O APPROPRIATE PROFESSIONAL SEALS.



1 BUILDING 2 - WEST ELEVATION
Scale: 3/32" = 1'-0"

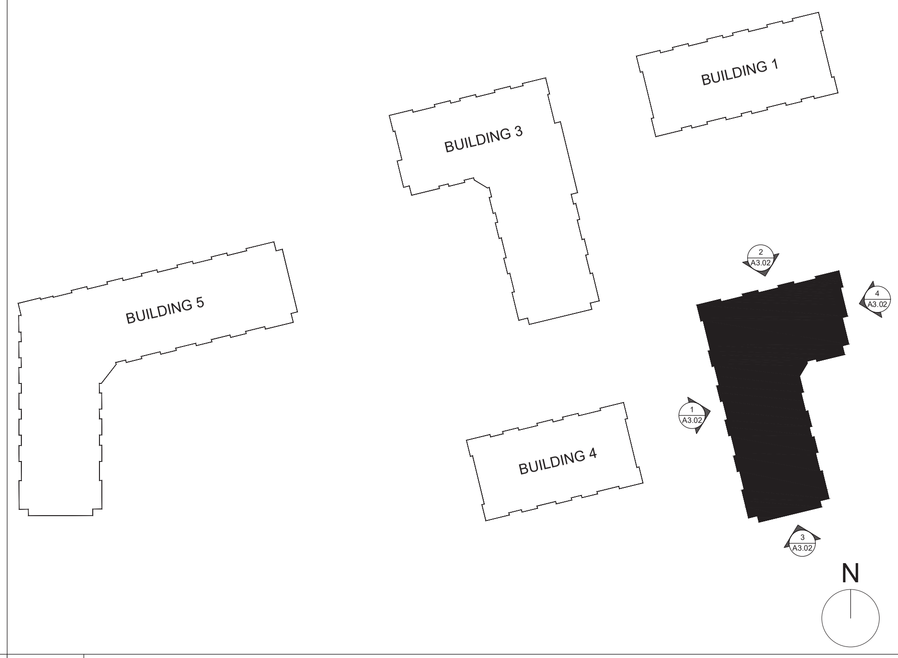

2 KEY PLAN
NTS



3 BUILDING 2 - NORTH ELEVATION
Scale: 3/32" = 1'-0"



4 BUILDING 2 - SOUTH ELEVATION
Scale: 3/32" = 1'-0"



5 BUILDING 2 - EAST ELEVATION
Scale: 3/32" = 1'-0"

a. **Town Certification.** This design has been reviewed by the Engineer for the Town of Knightdale, and to the best of my knowledge and belief, it conforms to the requirements established in the Standard Specifications of the Town of Knightdale.
By: Samuel A. MacDonald Date: _____
Town Engineer

These plans are approved by the Town of Knightdale and serve as construction plans for this project.
By: Kevin Lewis Date: _____
Land Use Administrator

1. All drawings are to be coordinated with all site information by owner and contractor, and applicable codes.
2. Contractor is to notify architect immediately of conditions or items varying from depicted information.
3. Planworx Architecture, P.A. is not responsible for constructed variations from the information depicted.
4. Planworx Architecture, P.A. will not assume any liability for expenses associated with errors and omissions on these drawings unless offset by verified construction savings as a result of planworx architecture, P.A. Design.
5. Planworx Architecture, P.A. retains ownership of all of designs depicted and implied herein.
6. Planworx Architecture, P.A. is not responsible for estimating, maintaining, or regulating construction costs associated with these plans.

© Copyright 2023 - PLANWORX ARCHITECTURE, P.A. All rights reserved. Reproduction of this sheet, in whole or in part, is strictly prohibited. Plans may be used once by client. Unauthorized use strictly prohibited. PLANS NOT VALID FOR CONSTRUCTION W/O APPROPRIATE PROFESSIONAL SEALS.

PLANWORX
ARCHITECTURE
5711 SIX FORKS ROAD, SUITE 100
RALEIGH NC 27609
website www.planworx.com

PLANWORX ARCHITECTURE, P.A. REGISTERED ARCHITECTURAL CORPORATION CERT. NO. 50909 N.C. RALEIGH, NC

THE DEWITT | KNIGHTDALE
KNIGHTDALE DEVELOPMENT OWNERSHIP, LLC
901 PARKSTONE TOWNE BLVD.,
KNIGHTDALE, NC 27545
DESIGN DEVELOPMENT

NOT FOR CONSTRUCTION

PROGRESS DATE:			
ISSUE DATE: 09.14.2023			
REVISIONS NUMBER	DATE	INITIALS	DESCRIPTION

PROJECT NO: 005221
DRAWN BY: AE, CL
CHECKED BY: BN

SHEET TITLE:
Building 2
Elevations

SHEET NUMBER:
A210

a. **Town Certification.** This design has been reviewed by the Engineer for the Town of Knightdale, and to the best of my knowledge and belief, it conforms to the requirements established in the Standard Specifications of the Town of Knightdale.

By: Samuel A. MacDonald Date: _____
Town Engineer

These plans are approved by the Town of Knightdale and serve as construction plans for this project.

By: Kevin Lewis Date: _____
Land Use Administrator



1 BUILDING 3 - EAST ELEVATION

Scale: 3/32" = 1'-0"



2 BUILDING 3 - NORTH ELEVATION

Scale: 3/32" = 1'-0"

ARCHITECTURAL PLANS
EXTERIOR MATERIALS

= STANDING SEAM METAL ROOF

= FIBER CEMENT LAP SIDING

= FIBER CEMENT BOARD & BATTEN (w/ 4" BATTEN STRIPS SPACED PER ELEVATIONS)

= BRICK VENEER

= BRICK ROWLOCK/SOLDIER

NOTE: SEE SHEET A0.32 FOR MATERIAL SPECS

ELEVATION GENERAL NOTES

ROOFS

*USE ICE AND WATER SHIELD AT ALL ROOF PLANES SLOPED BELOW 4:12.

ROOF VENTILATION

SEE ROOF PLANS FOR ATTIC VENTILATION CALCULATION REQUIREMENTS.

PENETRATIONS

ALL EXTERIOR WALL PENETRATIONS (EXHAUST & PLUMBING VENTS) TO MATCH ADJACENT WALL MATERIAL

1. All drawings are to be coordinated with all site information by owner and contractor, and applicable codes.
2. Contractor is to notify architect immediately of conditions or items varying from depicted information.
3. Planworx Architecture, P.A. is not responsible for constructed variations from the information depicted.
4. Planworx Architecture, P.A. will not assume any liability for expenses associated with errors and omissions on these drawings unless offset by verified construction savings as a result of planworx architecture, P.A. Design.
5. Planworx Architecture, P.A. retains ownership of all of designs depicted and implied herein.
6. Planworx Architecture, P.A. is not responsible for estimating, maintaining, or regulating construction costs associated with these plans.

© Copyright 2023 - PLANWORX ARCHITECTURE, P.A. All rights reserved. Reproduction of this sheet, in whole or in part, is strictly prohibited. Plans may be used once by client. Unauthorized use strictly prohibited. PLANS NOT VALID FOR CONSTRUCTION W/O APPROPRIATE PROFESSIONAL SEALS.

PLANWORX
ARCHITECTURE
5711 SIX FORKS ROAD, SUITE 100
RALEIGH NC 27609
website www.planworx.com

PLANWORX ARCHITECTURE · PA
REGISTERED ARCHITECTURAL CORPORATION
CERT. NO. 50909
N.C.
RALEIGH, NC

THE DEWITT | KNIGHTDALE
KNIGHTDALE DEVELOPMENT OWNERSHIP, LLC
901 PARKSTONE TOWNE BLVD.,
KNIGHTDALE, NC 27545
DESIGN DEVELOPMENT

NOT FOR CONSTRUCTION

PROGRESS DATE:	ISSUE DATE:	REVISIONS: NUMBER	DATE	INITIALS	DESCRIPTION
09.14.2023					

PROJECT NO: 005221
DRAWN BY: AE, CL
CHECKED BY: BN

SHEET TITLE:
Building 3
Elevations

SHEET NUMBER:
A220

a. **Town Certification.** This design has been reviewed by the Engineer for the Town of Knightdale, and to the best of my knowledge and belief, it conforms to the requirements established in the Standard Specifications of the Town of Knightdale.

By: Samuel A. MacDonald Date: _____
Town Engineer

These plans are approved by the Town of Knightdale and serve as construction plans for this project.

By: Kevin Lewis Date: _____
Land Use Administrator



1 BUILDING 3 - WEST ELEVATION
Scale: 3/32" = 1'-0"



2 BUILDING 3 - SOUTH ELEVATION
Scale: 3/32" = 1'-0"

ARCHITECTURAL PLANS
EXTERIOR MATERIALS

= STANDING SEAM METAL ROOF
= FIBER CEMENT LAP SIDING
= FIBER CEMENT BOARD & BATTEN (w/ 4" BATTEN STRIPS SPACED PER ELEVATIONS)
= BRICK VENEER
= BRICK ROWLOCK/SOLDIER

NOTE: SEE SHEET A0.32 FOR MATERIAL SPECS

ELEVATION GENERAL NOTES

ROOFS
*USE ICE AND WATER SHIELD AT ALL ROOF PLANES SLOPED BELOW 4:12.

ROOF VENTILATION
SEE ROOF PLANS FOR ATTIC VENTILATION CALCULATION REQUIREMENTS.

PENETRATIONS
ALL EXTERIOR WALL PENETRATIONS (EXHAUST & PLUMBING VENTS) TO MATCH ADJACENT WALL MATERIAL

1. All drawings are to be coordinated with all site information by owner and contractor, and applicable codes.
2. Contractor is to notify architect immediately of conditions or items varying from depicted information.
3. Planworx Architecture, P.A. is not responsible for constructed variations from the information depicted.
4. Planworx Architecture, P.A. will not assume any liability for expenses associated with errors and omissions on these drawings unless offset by verified construction savings as a result of planworx architecture, P.A. Design.
5. Planworx Architecture, P.A. retains ownership of all of designs depicted and implied herein.
6. Planworx Architecture, P.A. is not responsible for estimating, maintaining, or regulating construction costs associated with these plans.

© Copyright 2023 - PLANWORX ARCHITECTURE, P.A. All rights reserved. Reproduction of this sheet, in whole or in part, is strictly prohibited. Plans may be used once by client. Unauthorized use strictly prohibited. PLANS NOT VALID FOR CONSTRUCTION W/O APPROPRIATE PROFESSIONAL SEALS.

PLANWORX
ARCHITECTURE
5711 SIX FORKS ROAD, SUITE 100
RALEIGH NC 27609
website www.planworx.com

PLANWORX ARCHITECTURE · PA
REGISTERED ARCHITECTURAL CORPORATION
CERT. NO. 50909
N.C.
RALEIGH, NC

THE DEWITT | KNIGHTDALE
KNIGHTDALE DEVELOPMENT OWNERSHIP, LLC
901 PARKSTONE TOWNE BLVD.,
KNIGHTDALE, NC 27545
DESIGN DEVELOPMENT

NOT FOR CONSTRUCTION

PROGRESS DATE: / ISSUE DATE:	INITIALS	DESCRIPTION
09.14.2023		

REVISIONS NUMBER	DATE

PROJECT NO: 005221
DRAWN BY: AE, CL
CHECKED BY: BN

SHEET TITLE:
Building 3
Elevations

SHEET NUMBER:
A221



1 BUILDING 4 - NORTH ELEVATION

Scale: 3/32" = 1'-0"



2 BUILDING 4 - EAST / WEST ELEVATION

Scale: 3/32" = 1'-0"



3 BUILDING 4 - SOUTH ELEVATION

Scale: 3/32" = 1'-0"

a. **Town Certification.** This design has been reviewed by the Engineer for the Town of Knightdale, and to the best of my knowledge and belief, it conforms to the requirements established in the Standard Specifications of the Town of Knightdale.

By: Samuel A. MacDonald Date: _____
Town Engineer

These plans are approved by the Town of Knightdale and serve as construction plans for this project.

By: Kevin Lewis Date: _____
Land Use Administrator

1. All drawings are to be coordinated with all site information by owner and contractor, and applicable codes.
2. Contractor is to notify architect immediately of conditions or items varying from depicted information.
3. Planworx Architecture, P.A. is not responsible for constructed variations from the information depicted.
4. Planworx Architecture, P.A. will not assume any liability for expenses associated with errors and omissions on these drawings unless offset by verified construction savings as a result of planworx architecture, P.A. Design.
5. Planworx Architecture, P.A. retains ownership of all of designs depicted and implied herein.
6. Planworx Architecture, P.A. is not responsible for estimating, maintaining, or regulating construction costs associated with these plans.

© Copyright 2023 - PLANWORX ARCHITECTURE, P.A. All rights reserved. Reproduction of this sheet, in whole or in part, is strictly prohibited. Plans may be used once by client. Unauthorized use strictly prohibited. PLANS NOT VALID FOR CONSTRUCTION W/O APPROPRIATE PROFESSIONAL SEALS.

PLANWORX
ARCHITECTURE
5711 SIX FORKS ROAD, SUITE 100
RALEIGH NC 27609
website www.planworx.com

PLANWORX ARCHITECTURE, PA
REGISTERED ARCHITECTURAL CORPORATION
CERT. NO. 50909
N.C.
RALEIGH, NC

THE DEWITT | KNIGHTDALE

KNIGHTDALE DEVELOPMENT OWNERSHIP, LLC

901 PARKSTONE TOWNE BLVD.,
KNIGHTDALE, NC 27545

DESIGN DEVELOPMENT

NOT FOR CONSTRUCTION

PROGRESS DATE:
ISSUE DATE: 09.14.2023

REVISIONS NUMBER	DATE	INITIALS	DESCRIPTION

PROJECT NO: 005221
DRAWN BY: AE, CL
CHECKED BY: BN

SHEET TITLE:
Building 4
Elevations

SHEET NUMBER:
A230



1 BUILDING 5 - NORTH ELEVATION

Scale: 3/32" = 1'-0"



2 BUILDING 5 - WEST ELEVATION

Scale: 3/32" = 1'-0"

a. **Town Certification.** This design has been reviewed by the Engineer for the Town of Knightdale, and to the best of my knowledge and belief, it conforms to the requirements established in the Standard Specifications of the Town of Knightdale.

By: Samuel A. MacDonald _____ Date: _____
Town Engineer

These plans are approved by the Town of Knightdale and serve as construction plans for this project.

By: Kevin Lewis _____ Date: _____
Land Use Administrator

1. All drawings are to be coordinated with all site information by owner and contractor, and applicable codes.
2. Contractor is to notify architect immediately of conditions or items varying from depicted information.
3. Planworx Architecture, P.A. is not responsible for constructed variations from the information depicted.
4. Planworx Architecture, P.A. will not assume any liability for expenses associated with errors and omissions on these drawings unless offset by verified construction savings as a result of planworx architecture, P.A. Design.
5. Planworx Architecture, P.A. retains ownership of all of designs depicted and implied herein.
6. Planworx Architecture, P.A. is not responsible for estimating, maintaining, or regulating construction costs associated with these plans.

© Copyright 2023 - PLANWORX ARCHITECTURE, P.A. All rights reserved. Reproduction of this sheet, in whole or in part, is strictly prohibited. Plans may be used once by client. Unauthorized use strictly prohibited. PLANS NOT VALID FOR CONSTRUCTION W/O APPROPRIATE PROFESSIONAL SEALS.

PLANWORX
ARCHITECTURE
5711 SIX FORKS ROAD, SUITE 100
RALEIGH NC 27609
website www.planworx.com

PLANWORX ARCHITECTURE, PA
REGISTERED ARCHITECTURAL CORPORATION
CERT. NO. 50909
N.C.
RALEIGH, NC

THE DEWITT | KNIGHTDALE

KNIGHTDALE DEVELOPMENT OWNERSHIP, LLC

901 PARKSTONE TOWNE BLVD.,
KNIGHTDALE, NC 27545

DESIGN DEVELOPMENT

NOT FOR CONSTRUCTION

PROGRESS DATE:	ISSUE DATE:	REVISIONS: NUMBER	DATE	INITIALS	DESCRIPTION
09.14.2023					

PROJECT NO: 005221
DRAWN BY: AE, CL
CHECKED BY: BN

SHEET TITLE:
Building 5
Elevations

SHEET NUMBER:
A240



1 BUILDING 5 - SOUTH ELEVATION

Scale: 3/32" = 1'-0"



2 BUILDING 5 - EAST ELEVATION

Scale: 3/32" = 1'-0"



3 BUILDING 5 - END ELEVATION

Scale: 3/32" = 1'-0"

a. **Town Certification.** This design has been reviewed by the Engineer for the Town of Knightdale, and to the best of my knowledge and belief, it conforms to the requirements established in the Standard Specifications of the Town of Knightdale.

By: Samuel A. MacDonald _____ Date: _____
Town Engineer

These plans are approved by the Town of Knightdale and serve as construction plans for this project.

By: Kevin Lewis _____ Date: _____
Land Use Administrator

1. All drawings are to be coordinated with all site information by owner and contractor, and applicable codes.
2. Contractor is to notify architect immediately of conditions or items varying from depicted information.
3. Planworx Architecture, P.A. is not responsible for constructed variations from the information depicted.
4. Planworx Architecture, P.A. will not assume any liability for expenses associated with errors and omissions on these drawings unless offset by verified construction savings as a result of planworx architecture, P.A. Design.
5. Planworx Architecture, P.A. retains ownership of all of designs depicted and implied herein.
6. Planworx Architecture, P.A. is not responsible for estimating, maintaining, or regulating construction costs associated with these plans.

© Copyright 2023 - PLANWORX ARCHITECTURE, P.A. All rights reserved. Reproduction of this sheet, in whole or in part, is strictly prohibited. Plans may be used once by client. Unauthorized use strictly prohibited. PLANS NOT VALID FOR CONSTRUCTION W/O APPROPRIATE PROFESSIONAL SEALS.

PLANWORX
ARCHITECTURE
5711 SIX FORKS ROAD, SUITE 100
RALEIGH NC 27609
website www.planworx.com

PLANWORX ARCHITECTURE, PA
REGISTERED ARCHITECTURAL CORPORATION
CERT. NO. 50909
N.C.
RALEIGH, NC

THE DEWITT | KNIGHTDALE

KNIGHTDALE DEVELOPMENT OWNERSHIP, LLC

901 PARKSTONE TOWNE BLVD.,
KNIGHTDALE, NC 27545

DESIGN DEVELOPMENT

NOT FOR CONSTRUCTION

PROGRESS DATE: 09.14.2023

ISSUE DATE:

REVISIONS: NUMBER	DATE	INITIALS	DESCRIPTION

PROJECT NO: 005221
DRAWN BY: AE, CL
CHECKED BY: BN

SHEET TITLE:
Building 5
Elevations

SHEET NUMBER:
A241

a. **Town Certification.** This design has been reviewed by the Engineer for the Town of Knightdale, and to the best of my knowledge and belief, it conforms to the requirements established in the Standard Specifications of the Town of Knightdale.

By: _____ Date: _____
Town Engineer

These plans are approved by the Town of Knightdale and serve as construction plans for this project.

By: Kevin Lewis Date: _____
Land Use Administrator

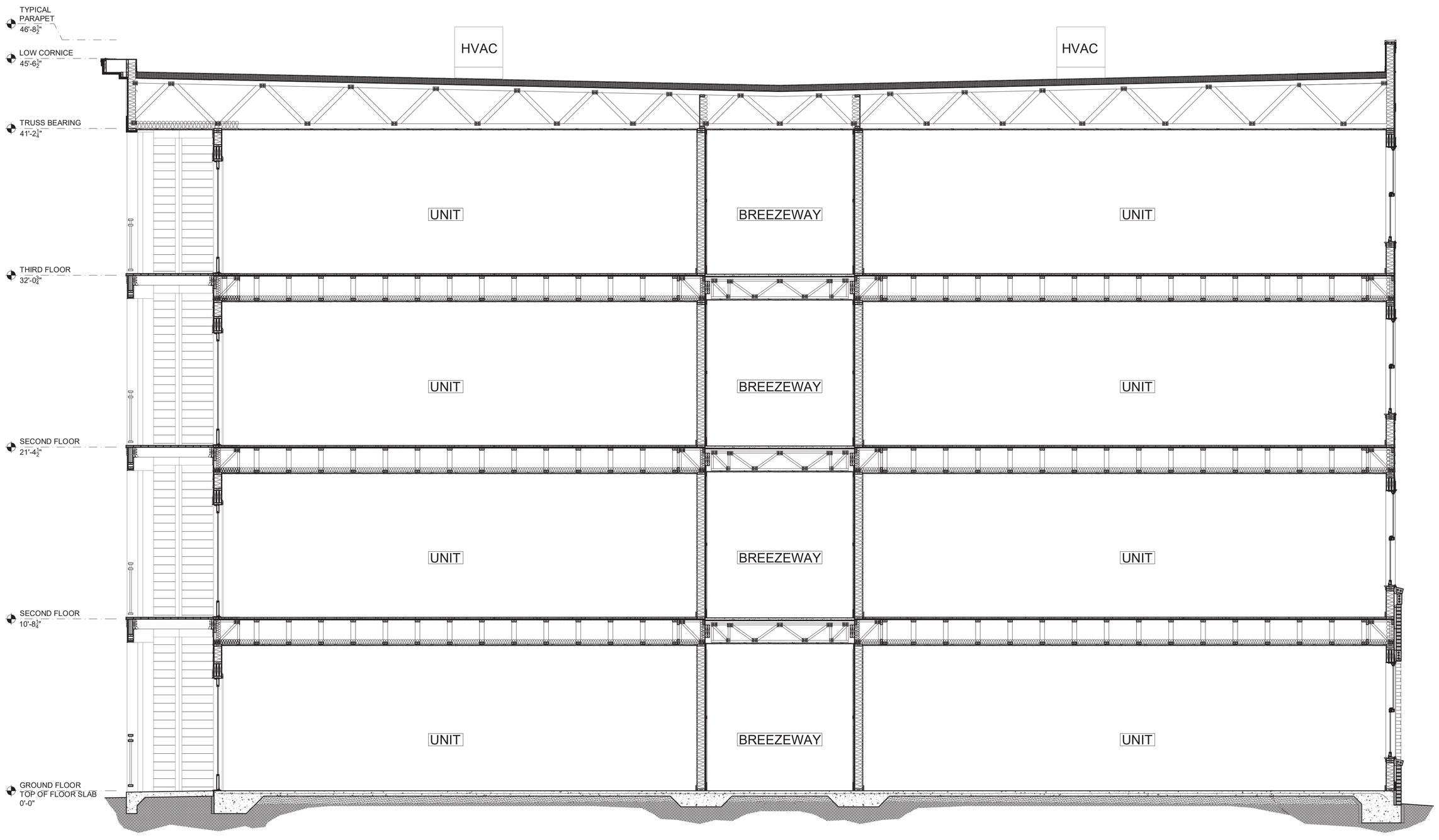

1 TYPICAL BUILDING CROSS-SECTION

Scale: 1/4" = 1'-0"

1. All drawings are to be coordinated with all site information by owner and contractor, and applicable codes.
2. Contractor is to notify architect immediately of conditions or items varying from depicted information.
3. Planworx Architecture, P.A. is not responsible for constructed variations from the information depicted.
4. Planworx Architecture, P.A. will not assume any liability for expenses associated with errors and omissions on these drawings unless offset by verified construction savings as a result of planworx architecture, P.A. Design.
5. Planworx Architecture, P.A. retains ownership of all of designs depicted and implied herein.
6. Planworx Architecture, P.A. is not responsible for estimating, maintaining, or regulating construction costs associated with these plans.

© Copyright 2023 - PLANWORX ARCHITECTURE, P.A. All rights reserved. Reproduction of this sheet, in whole or in part, is strictly prohibited. Plans may be used once by client. Unauthorized use strictly prohibited. PLANS NOT VALID FOR CONSTRUCTION W/O APPROPRIATE PROFESSIONAL SEALS.

PLANWORX
ARCHITECTURE
5711 SIX FORKS ROAD, SUITE 100
RALEIGH NC 27609
website www.planworx.com

PLANWORX ARCHITECTURE, P.A. REGISTERED ARCHITECTURAL CORPORATION CERT. NO. 50909 N.C. RALEIGH, NC

THE DEWITT | KNIGHTDALE
KNIGHTDALE DEVELOPMENT OWNERSHIP, LLC
901 PARKSTONE TOWNE BLVD.,
KNIGHTDALE, NC 27545
DESIGN DEVELOPMENT

NOT FOR CONSTRUCTION

PROGRESS DATE: 09.14.2023
ISSUE DATE:
REVISIONS: NUMBER | DATE | INITIALS | DESCRIPTION

PROJECT NO: 005221
DRAWN BY: AE, CL
CHECKED BY: BN

SHEET TITLE:
CROSS-SECTION TYPICAL

SHEET NUMBER:
A301

a. **Town Certification.** This design has been reviewed by the Engineer for the Town of Knightdale, and to the best of my knowledge and belief, it conforms to the requirements established in the Standard Specifications of the Town of Knightdale.

By: _____ Date: _____
Samuel A. MacDonald
Town Engineer

These plans are approved by the Town of Knightdale and serve as construction plans for this project.

By: _____ Date: _____
Kevin Lewis
Land Use Administrator

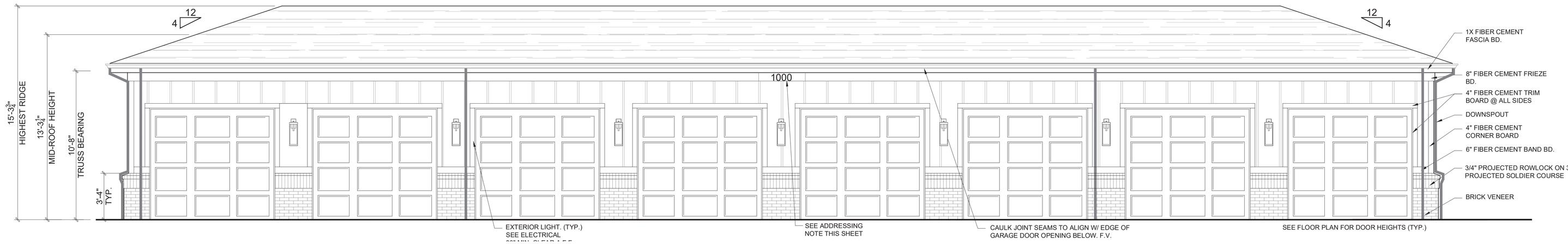

1 GARAGE TYPE 1 - FRONT ELEVATION

SCALE: 1/4" = 1'-0"

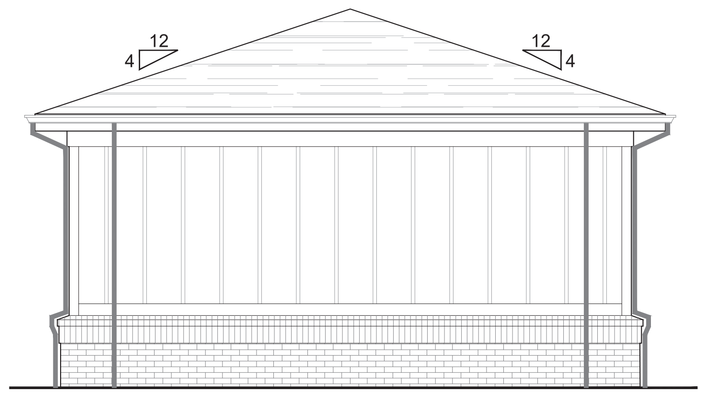

2 GARAGE TYPE 1 - LEFT SIDE ELEVATION

SCALE: 1/4" = 1'-0"

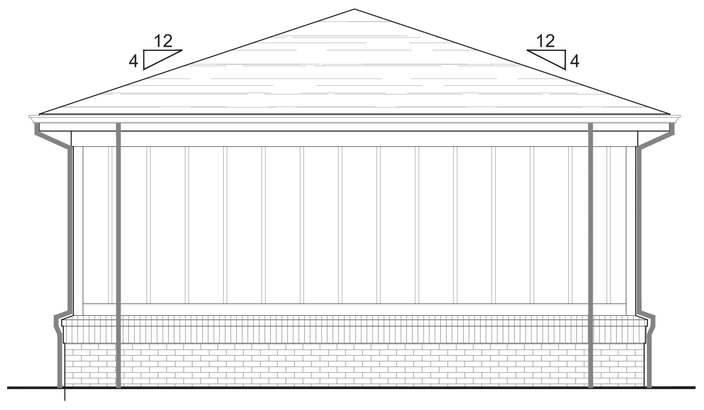

3 GARAGE TYPE 1 - RIGHT SIDE ELEVATION

SCALE: 1/4" = 1'-0"

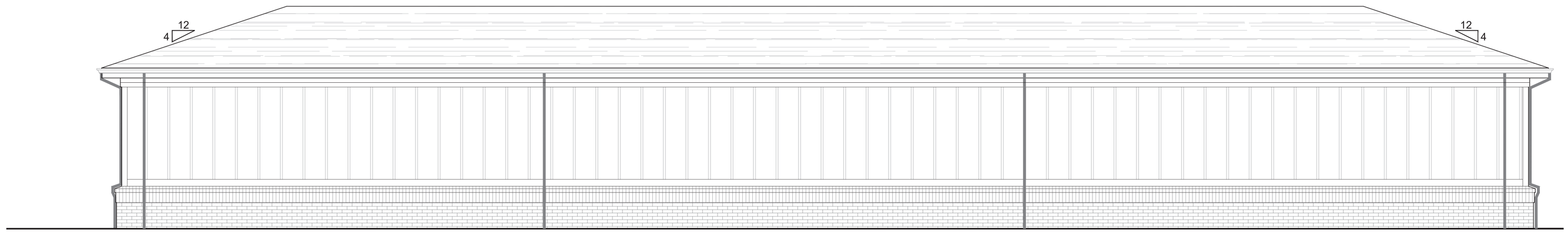

4 GARAGE TYPE 1 - REAR ELEVATION

SCALE: 1/4" = 1'-0"

EXTERIOR MATERIAL LEGEND

- = ASPHALT SHINGLE ROOF
- = FIBER CEMENT PANEL BD W/ 2" BATTENS @ 18" O.C. PER ELEVATION
- = BRICK VENEER
- = 3/4" PROJECTED BRICK ROWLOCK/SOLDIER COURSE.

ELEVATION GENERAL NOTES

ADDRESSING

ADDRESS IDENTIFICATION SHALL HAVE APPROVED ADDRESS NUMBERS, BUILDING NUMBERS OR APPROVED BUILDING IDENTIFICATION PLACED IN A POSITION THAT IS PLAINLY LEGIBLE AND VISIBLE FROM THE STREET OR ROAD FRONTING THE PROPERTY. THESE NUMBERS SHALL CONTRAST WITH THEIR BACKGROUND. ADDRESS NUMBERS SHALL BE ARABIC NUMBERS OR ALPHABETICAL LETTERS 6" MIN. IN HEIGHT. ADDRESS NUMBERS SHALL BE PLACED ON EACH SIDE AS WELL AS APARTMENT NUMBERS ON THE FRONT OF EACH BREEZEWAY.

PENETRATIONS

ALL WALL/ROOF PENETRATIONS TO MATCH COLOR OF ADJACENT MATERIAL

1. All drawings are to be coordinated with all site information by owner and contractor, and applicable codes.
2. Contractor is to notify architect immediately of conditions or items varying from depicted information.
3. Planworx Architecture, P.A. is not responsible for constructed variations from the information depicted.
4. Planworx Architecture, P.A. will not assume any liability for expenses associated with errors and omissions on these drawings unless offset by verified construction savings as a result of planworx architecture, P.A. Design.
5. Planworx Architecture, P.A. retains ownership of all of designs depicted and implied herein.
6. Planworx Architecture, P.A. is not responsible for estimating, maintaining, or regulating construction costs associated with these plans.

© Copyright 2023 - PLANWORX ARCHITECTURE, P.A. All rights reserved. Reproduction of this sheet, in whole or in part, is strictly prohibited. Plans may be used once by client. Unauthorized use strictly prohibited. PLANS NOT VALID FOR CONSTRUCTION W/O APPROPRIATE PROFESSIONAL SEALS.

PLANWORX
ARCHITECTURE
5711 SIX FORKS ROAD, SUITE 100
RALEIGH NC 27609
website www.planworx.com

PLANWORX ARCHITECTURE, PA
REGISTERED ARCHITECTURAL CORPORATION
CERT. NO. 50909
N.C.
RALEIGH, NC

THE DEWITT | KNIGHTDALE
KNIGHTDALE DEVELOPMENT OWNERSHIP, LLC
901 PARKSTONE TOWNE BLVD.,
KNIGHTDALE, NC 27545
DESIGN DEVELOPMENT

NOT FOR CONSTRUCTION

PROGRESS DATE:			
09.14.2023			
ISSUE DATE:			
REVISIONS: NUMBER	INITIALS	DATE	DESCRIPTION

PROJECT NO: 005221
DRAWN BY: AE, CL
CHECKED BY: BN

SHEET TITLE:
GARAGE TYPE 1 ELEVATIONS

SHEET NUMBER:
A702

a. **Town Certification.** This design has been reviewed by the Engineer for the Town of Knightdale, and to the best of my knowledge and belief, it conforms to the requirements established in the Standard Specifications of the Town of Knightdale.

By: _____ Date: _____
Town Engineer

These plans are approved by the Town of Knightdale and serve as construction plans for this project.

By: Kevin Lewis Date: _____
Land Use Administrator

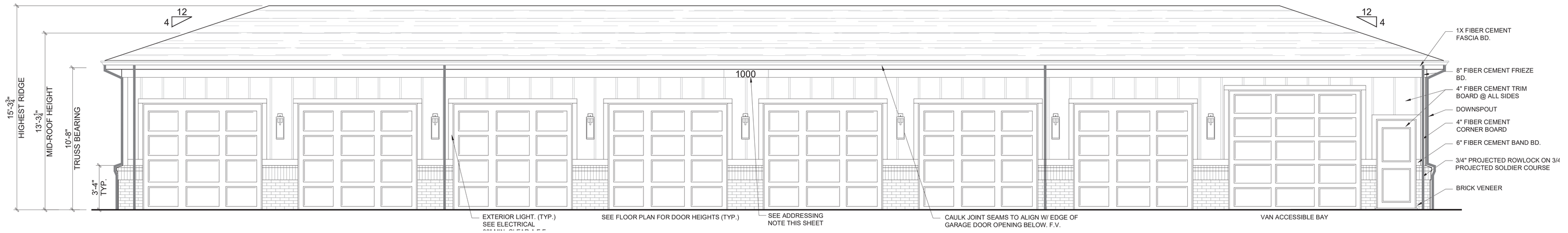

1 GARAGE TYPE 2 - FRONT ELEVATION

SCALE: 1/4" = 1'-0"

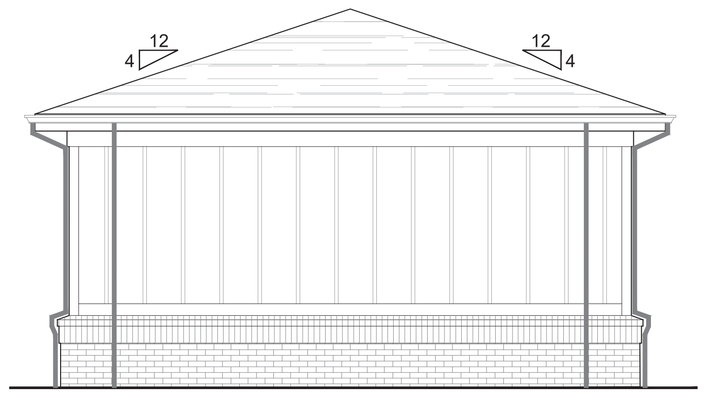

2 GARAGE TYPE 2 - LEFT SIDE ELEVATION

SCALE: 1/4" = 1'-0"

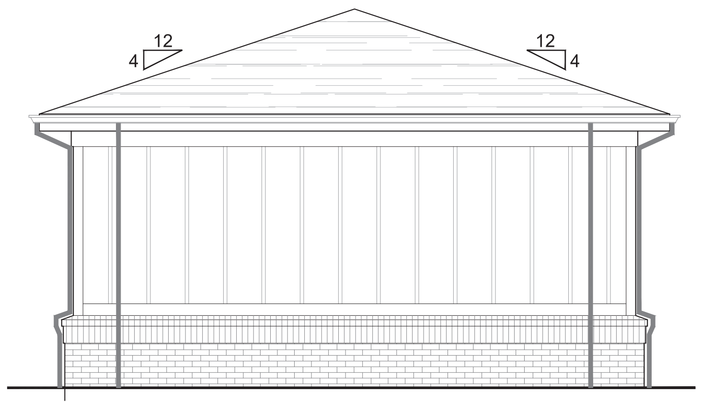

3 GARAGE TYPE 2 - RIGHT SIDE ELEVATION

SCALE: 1/4" = 1'-0"

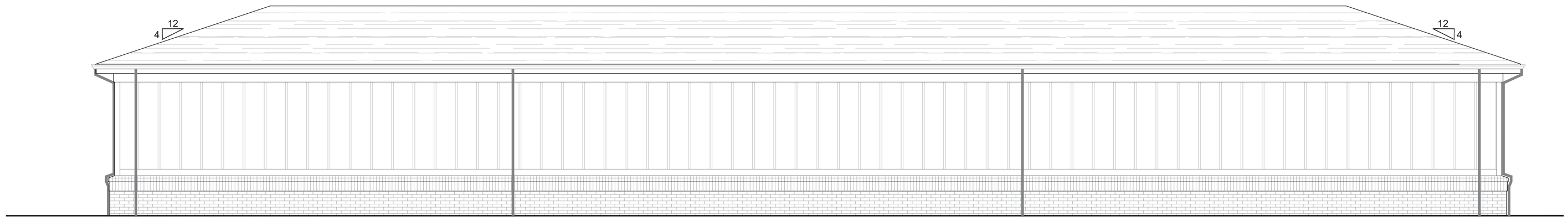

4 GARAGE TYPE 2 - REAR ELEVATION

SCALE: 1/4" = 1'-0"

EXTERIOR MATERIAL LEGEND

- = ASPHALT SHINGLE ROOF
- = FIBER CEMENT PANEL BD W/ 2" BATTENS @ 18" O.C. PER ELEVATION
- = BRICK VENEER
- = 3/4" PROJECTED BRICK ROWLOCK/SOLDIER COURSE.

ELEVATION GENERAL NOTES

ADDRESSING

ADDRESS IDENTIFICATION SHALL HAVE APPROVED ADDRESS NUMBERS, BUILDING NUMBERS OR APPROVED BUILDING IDENTIFICATION PLACED IN A POSITION THAT IS PLAINLY LEGIBLE AND VISIBLE FROM THE STREET OR ROAD FRONTING THE PROPERTY. THESE NUMBERS SHALL CONTRAST WITH THEIR BACKGROUND. ADDRESS NUMBERS SHALL BE ARABIC NUMBERS OR ALPHABETICAL LETTERS 6" MIN. IN HEIGHT. ADDRESS NUMBERS SHALL BE PLACED ON EACH SIDE AS WELL AS APARTMENT NUMBERS ON THE FRONT OF EACH BREEZEWAY.

PENETRATIONS

ALL WALL/ROOF PENETRATIONS TO MATCH COLOR OF ADJACENT MATERIAL

1. All drawings are to be coordinated with all site information by owner and contractor, and applicable codes.
2. Contractor is to notify architect immediately of conditions or items varying from depicted information.
3. Planworx Architecture, P.A. is not responsible for constructed variations from the information depicted.
4. Planworx Architecture, P.A. will not assume any liability for expenses associated with errors and omissions on these drawings unless offset by verified construction savings as a result of planworx architecture, P.A. Design.
5. Planworx Architecture, P.A. retains ownership of all of designs depicted and implied herein.
6. Planworx Architecture, P.A. is not responsible for estimating, maintaining, or regulating construction costs associated with these plans.

© Copyright 2023 - PLANWORX ARCHITECTURE, P.A. All rights reserved. Reproduction of this sheet, in whole or in part, is strictly prohibited. Plans may be used once by client. Unauthorized use strictly prohibited. PLANS NOT VALID FOR CONSTRUCTION W/O APPROPRIATE PROFESSIONAL SEALS.

PLANWORX
ARCHITECTURE
5711 SIX FORKS ROAD, SUITE 100
RALEIGH NC 27609
website www.planworx.com

PLANWORX ARCHITECTURE, P.A. REGISTERED ARCHITECTURAL CORPORATION CERT. NO. 50909 N.C. RALEIGH, NC

THE DEWITT | KNIGHTDALE
KNIGHTDALE DEVELOPMENT OWNERSHIP, LLC
901 PARKSTONE TOWNE BLVD.,
KNIGHTDALE, NC 27545
DESIGN DEVELOPMENT

NOT FOR CONSTRUCTION

PROGRESS DATE: 09.14.2023				
ISSUE DATE:	REVISIONS: NUMBER	DATE	INITIALS	DESCRIPTION

PROJECT NO: 005221
DRAWN BY: AE, CL
CHECKED BY: BN

SHEET TITLE:
GARAGE TYPE 2 ELEVATIONS

SHEET NUMBER:
A704

a. **Town Certification.** This design has been reviewed by the Engineer for the Town of Knightdale, and to the best of my knowledge and belief, it conforms to the requirements established in the Standard Specifications of the Town of Knightdale.

By: Samuel A. MacDonald Date: _____
Town Engineer

These plans are approved by the Town of Knightdale and serve as construction plans for this project.

By: Kevin Lewis Date: _____
Land Use Administrator

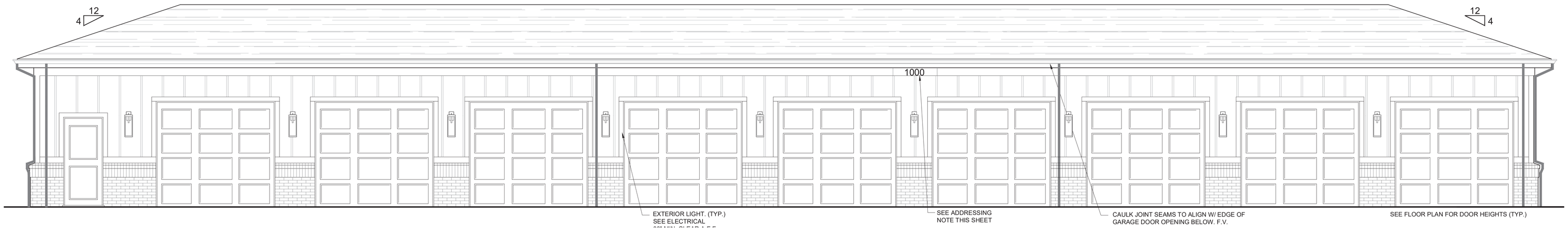

1 GARAGE TYPE 3 - FRONT ELEVATION

SCALE: 1/4" = 1'-0"

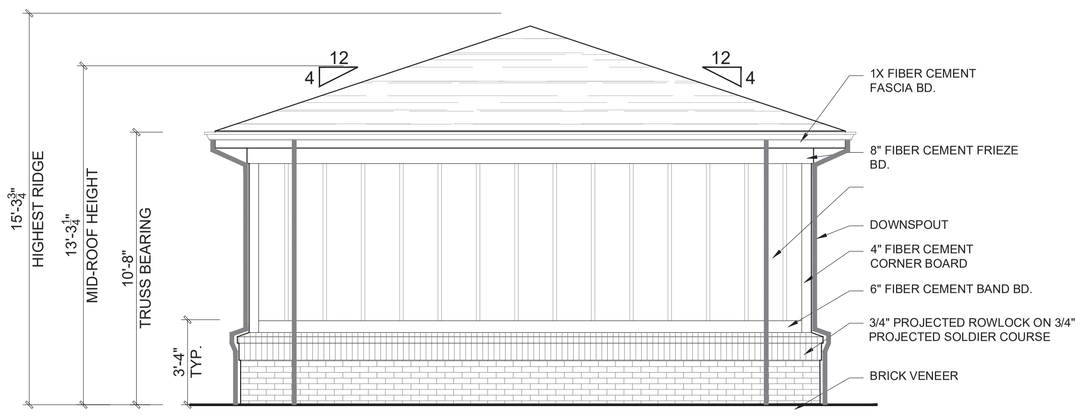

2 GARAGE TYPE 3 - LEFT SIDE ELEVATION

SCALE: 1/4" = 1'-0"

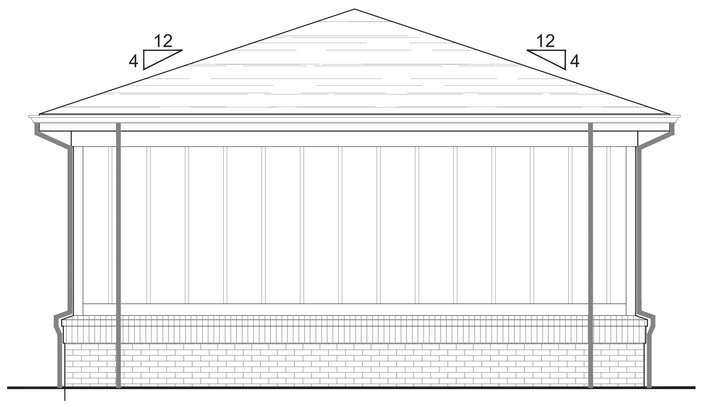

3 GARAGE TYPE 3 - RIGHT SIDE ELEVATION

SCALE: 1/4" = 1'-0"

EXTERIOR MATERIAL LEGEND

= ASPHALT SHINGLE ROOF

= FIBER CEMENT PANEL BD W/ 2" BATTENS @ 18" O.C. PER ELEVATION

= BRICK VENEER

= 3/4" PROJECTED BRICK ROWLOCK/SOLDIER COURSE.

ELEVATION GENERAL NOTES

ADDRESSING

ADDRESS IDENTIFICATION SHALL HAVE APPROVED ADDRESS NUMBERS, BUILDING NUMBERS OR APPROVED BUILDING IDENTIFICATION PLACED IN A POSITION THAT IS PLAINLY LEGIBLE AND VISIBLE FROM THE STREET OR ROAD FRONTING THE PROPERTY. THESE NUMBERS SHALL CONTRAST WITH THEIR BACKGROUND. ADDRESS NUMBERS SHALL BE ARABIC NUMBERS OR ALPHABETICAL LETTERS 6" MIN. IN HEIGHT. ADDRESS NUMBERS SHALL BE PLACED ON EACH SIDE AS WELL AS APARTMENT NUMBERS ON THE FRONT OF EACH BREEZEWAY.

PENETRATIONS

ALL WALL/ROOF PENETRATIONS TO MATCH COLOR OF ADJACENT MATERIAL

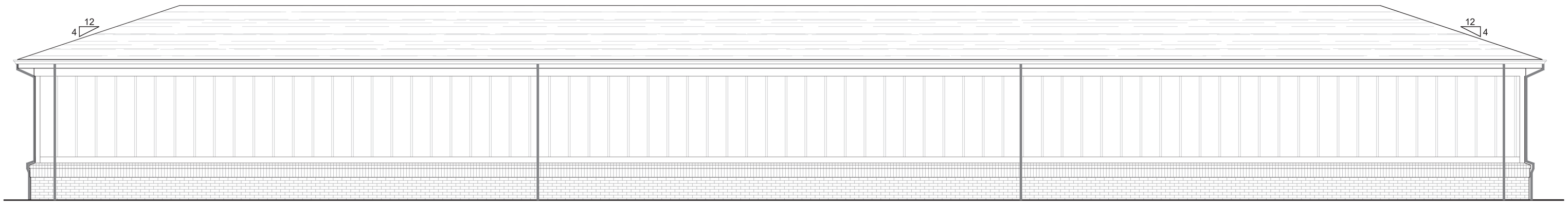

4 GARAGE TYPE 3 - REAR ELEVATION

SCALE: 1/4" = 1'-0"

1. All drawings are to be coordinated with all site information by owner and contractor, and applicable codes.
2. Contractor is to notify architect immediately of conditions or items varying from depicted information.
3. Planworx Architecture, P.A. is not responsible for constructed variations from the information depicted.
4. Planworx Architecture, P.A. will not assume any liability for expenses associated with errors and omissions on these drawings unless offset by verified construction savings as a result of planworx architecture, P.A. Design.
5. Planworx Architecture, P.A. retains ownership of all of designs depicted and implied herein.
6. Planworx Architecture, P.A. is not responsible for estimating, maintaining, or regulating construction costs associated with these plans.

© Copyright 2023 - PLANWORX ARCHITECTURE, P.A. All rights reserved. Reproduction of this sheet, in whole or in part, is strictly prohibited. Plans may be used once by client. Unauthorized use strictly prohibited. PLANS NOT VALID FOR CONSTRUCTION W/O APPROPRIATE PROFESSIONAL SEALS.

PLANWORX
ARCHITECTURE
5711 SIX FORKS ROAD, SUITE 100
RALEIGH NC 27609
website www.planworx.com

PLANWORX ARCHITECTURE, PA
REGISTERED ARCHITECTURAL CORPORATION
CERT. NO. 50909
N.C.
RALEIGH, NC

THE DEWITT | KNIGHTDALE
KNIGHTDALE DEVELOPMENT OWNERSHIP, LLC
901 PARKSTONE TOWNE BLVD.,
KNIGHTDALE, NC 27545
DESIGN DEVELOPMENT

NOT FOR CONSTRUCTION

PROGRESS DATE:	09.14.2023
ISSUE DATE:	
REVISIONS: NUMBER	
DATE	
INITIALS	
DESCRIPTION	

PROJECT NO:	005221
DRAWN BY:	AE, CL
CHECKED BY:	BN

SHEET TITLE:
GARAGE TYPE 3 ELEVATIONS

SHEET NUMBER:
A706

a. **Town Certification.** This design has been reviewed by the Engineer for the Town of Knightdale, and to the best of my knowledge and belief, it conforms to the requirements established in the Standard Specifications of the Town of Knightdale.

By: Samuel A. MacDonald Date: _____
Town Engineer

These plans are approved by the Town of Knightdale and serve as construction plans for this project.

By: Kevin Lewis Date: _____
Land Use Administrator

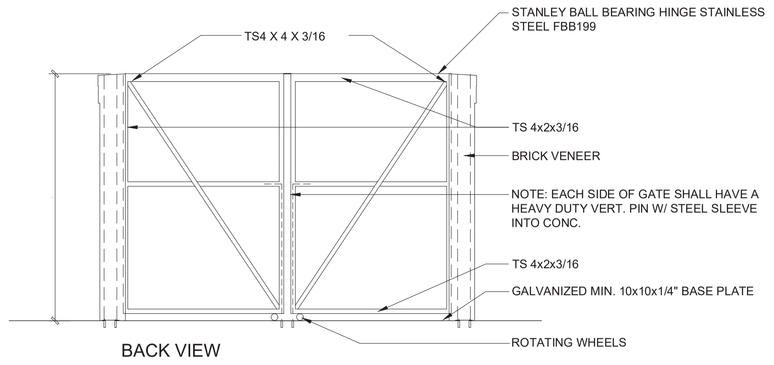

6 GATE DETAIL BACK VIEW
1/4"=1'-0"

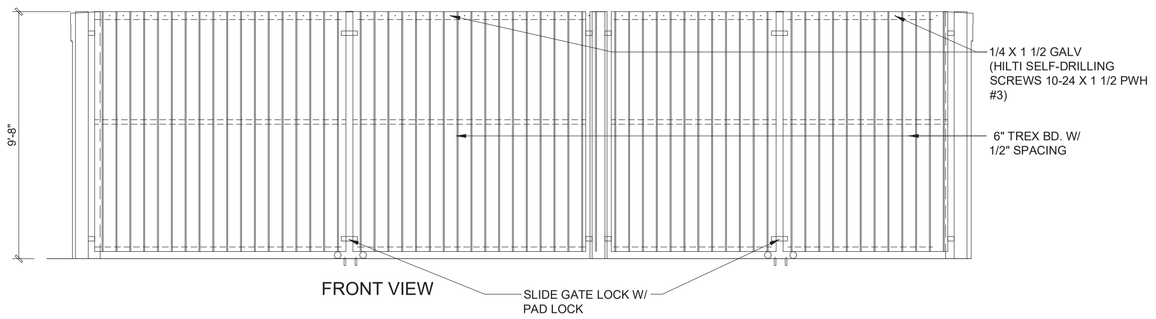

5 GATE DETAIL FRONT VIEW
1/4"=1'-0"

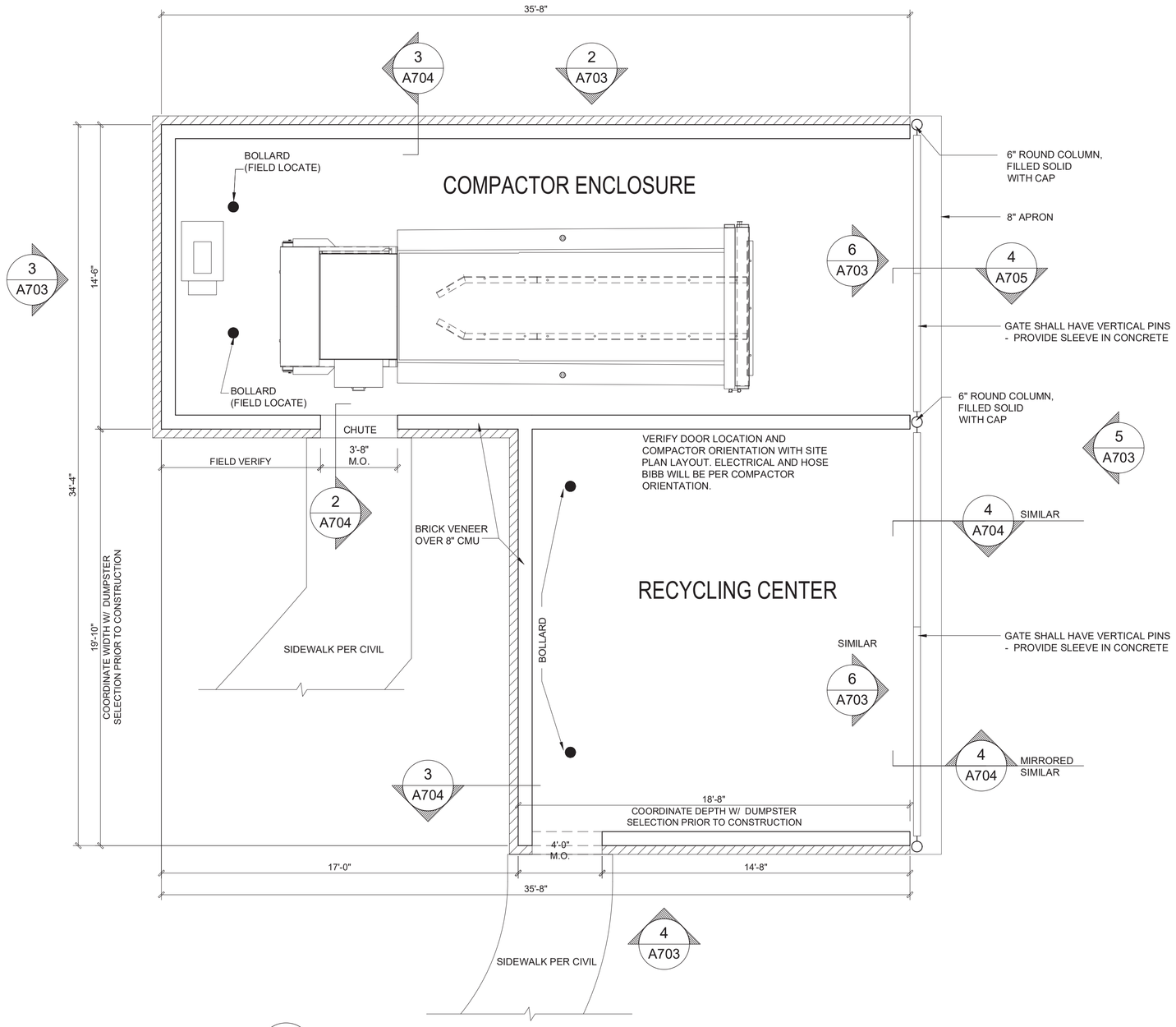

1 TRASH COMPACTOR ENCLOSURE PLAN
1/4"=1'-0"

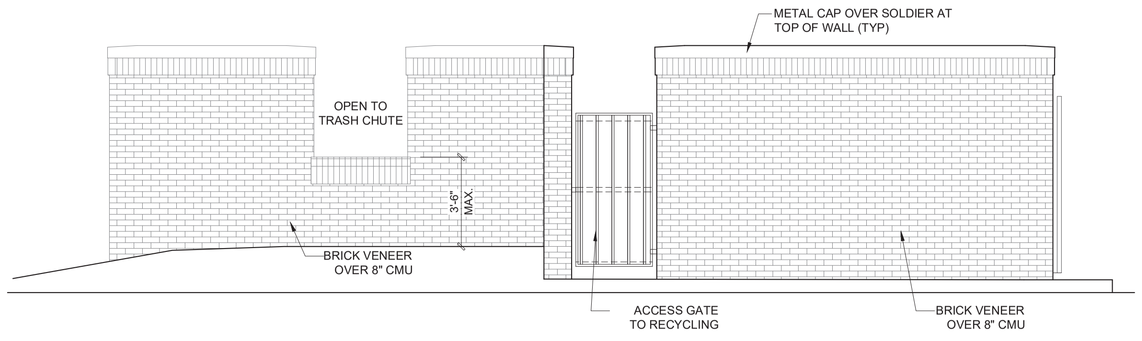

4 TRASH COMPACTOR REAR ELEVATION
1/4"=1'-0"

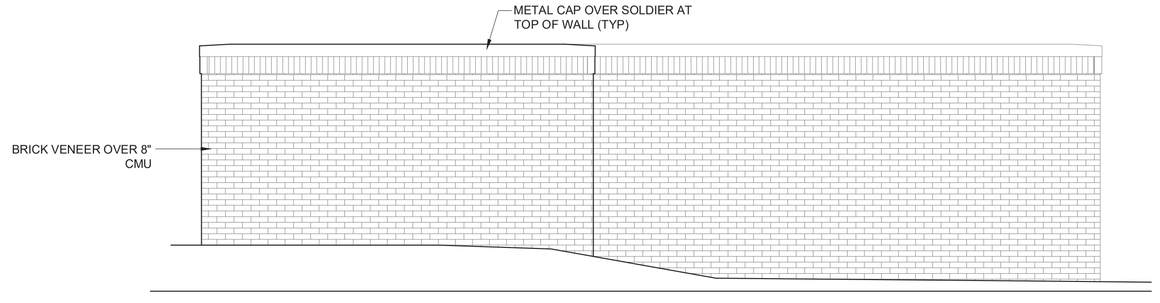

3 TRASH COMPACTOR SIDE ELEVATION
1/4"=1'-0"

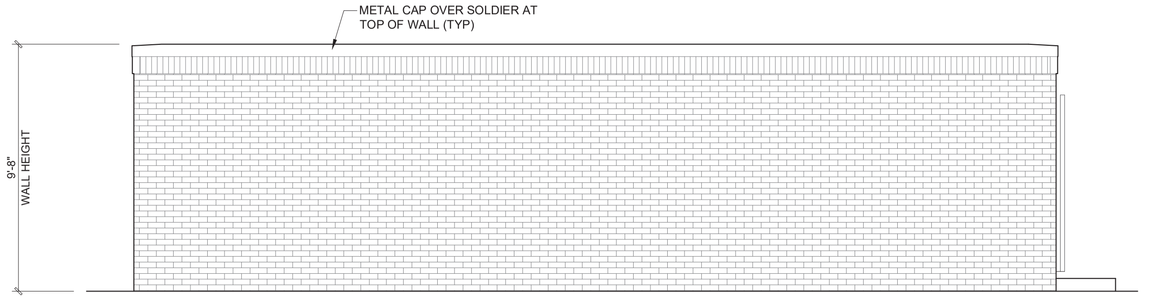

2 TRASH COMPACTOR FRONT ELEVATION
1/4"=1'-0"

1 TRASH COMPACTOR - FOUNDATION PLAN AND DETAILS
SCALE: 1/4"=1'-0"

1. All drawings are to be coordinated with all site information by owner and contractor, and applicable codes.
2. Contractor is to notify architect immediately of conditions or items varying from depicted information.
3. Planworx Architecture, P.A. is not responsible for constructed variations from the information depicted.
4. Planworx Architecture, P.A. will not assume any liability for expenses associated with errors and omissions on these drawings unless offset by verified construction savings as a result of planworx architecture, P.A. Design.
5. Planworx Architecture, P.A. retains ownership of all of designs depicted and implied herein.
6. Planworx Architecture, P.A. is not responsible for estimating, maintaining, or regulating construction costs associated with these plans.

© Copyright 2023 - PLANWORX ARCHITECTURE, P.A. All rights reserved. Reproduction of this sheet, in whole or in part, is strictly prohibited. Plans may be used once by client. Unauthorized use strictly prohibited. PLANS NOT VALID FOR CONSTRUCTION W/O APPROPRIATE PROFESSIONAL SEALS.

PLANWORX ARCHITECTURE
5711 SIX FORKS ROAD, SUITE 100
RALEIGH NC 27609
website www.planworx.com

PLANWORX ARCHITECTURE, P.A. REGISTERED ARCHITECTURAL CORPORATION CERT. NO. 50909 N.C. RALEIGH, NC

THE DEWITT | KNIGHTDALE

KNIGHTDALE DEVELOPMENT OWNERSHIP, LLC

901 PARKSTONE TOWNE BLVD.,
KNIGHTDALE, NC 27545

DESIGN DEVELOPMENT

NOT FOR CONSTRUCTION

PROGRESS DATE: 09.14.2023			
ISSUE DATE:	REVISIONS: NUMBER	DATE	INITIALS	DESCRIPTION

PROJECT NO: 005221
DRAWN BY: AE, CL
CHECKED BY: BN

SHEET TITLE:
TRASH COMPACTOR PLAN & ELEVATIONS

SHEET NUMBER:
A707

a. **Town Certification.** This design has been reviewed by the Engineer for the Town of Knightdale, and to the best of my knowledge and belief, it conforms to the requirements established in the Standard Specifications of the Town of Knightdale.

By: _____ Date: _____
Town Engineer

These plans are approved by the Town of Knightdale and serve as construction plans for this project.

By: _____ Date: _____
Land Use Administrator

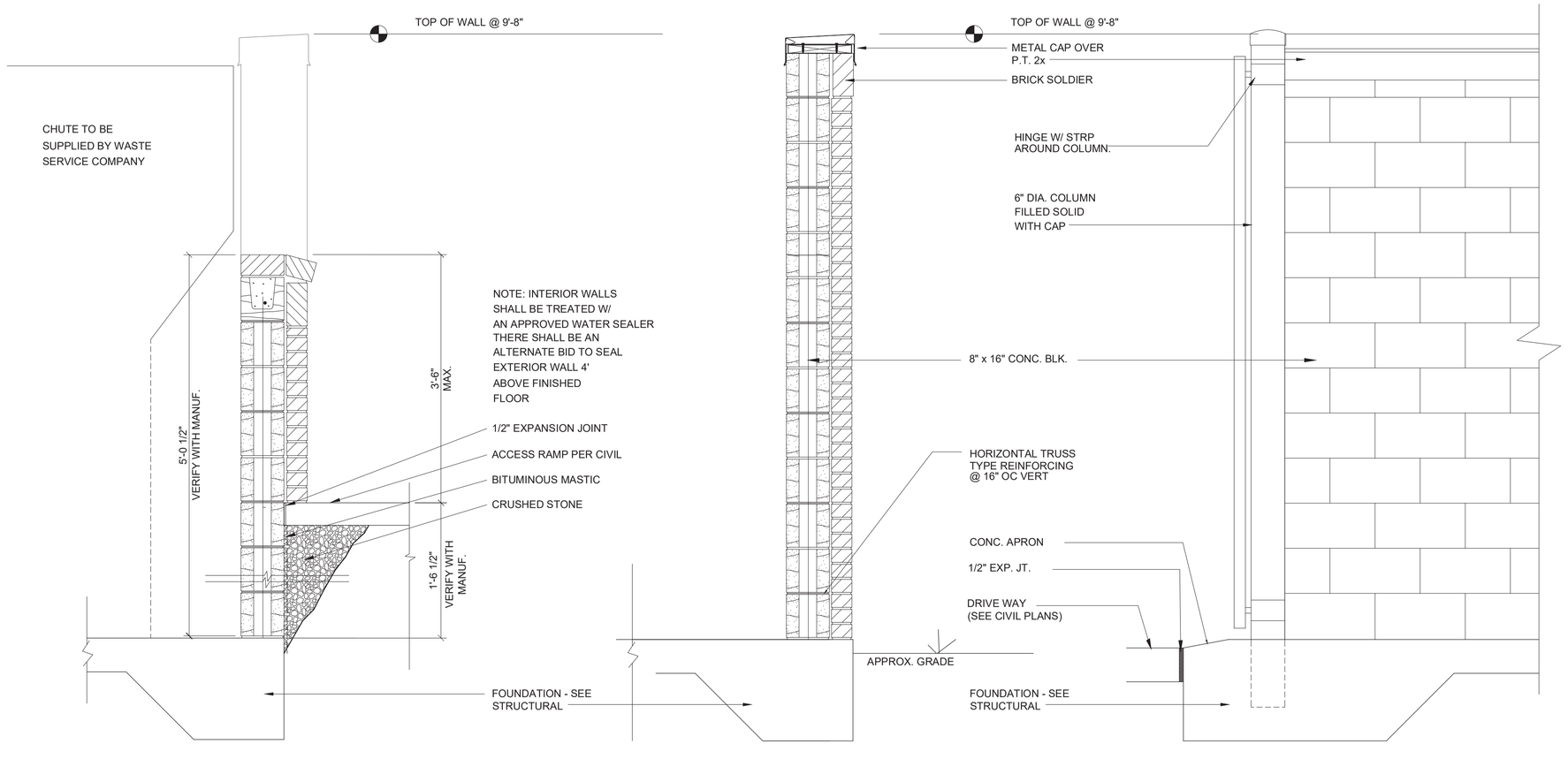

NOTE: ALL COMPACTOR SUPPORTS SHALL BE SUPPLIED BY THE COMPACTOR MANUF.

2 SECTION DETAIL 3/4"=1'-0"

3 SECTION DETAIL 3/4"=1'-0"

4 SECTION DETAIL 3/4"=1'-0"

1 TRASH COMPACTOR - PLAN AND ELEVATIONS

Scale: 1/4" = 1'-0"

1. All drawings are to be coordinated with all site information by owner and contractor, and applicable codes.
2. Contractor is to notify architect immediately of conditions or items varying from depicted information.
3. Planworx Architecture, P.A. is not responsible for constructed variations from the information depicted.
4. Planworx Architecture, P.A. will not assume any liability for expenses associated with errors and omissions on these drawings unless offset by verified construction savings as a result of planworx architecture, P.A. Design.
5. Planworx Architecture, P.A. retains ownership of all of designs depicted and implied herein.
6. Planworx Architecture, P.A. is not responsible for estimating, maintaining, or regulating construction costs associated with these plans.

© Copyright 2023 - PLANWORX ARCHITECTURE, P.A. All rights reserved. Reproduction of this sheet, in whole or in part, is strictly prohibited. Plans may be used once by client. Unauthorized use strictly prohibited. PLANS NOT VALID FOR CONSTRUCTION W/O APPROPRIATE PROFESSIONAL SEALS.

PLANWORX
ARCHITECTURE
5711 SIX FORKS ROAD, SUITE 100
RALEIGH NC 27609
website www.planworx.com

REGISTERED ARCHITECTURAL CORPORATION PLANWORX ARCHITECTURE, PA CERT. NO. 50909 N.C. RALEIGH, NC

THE DEWITT | KNIGHTDALE
KNIGHTDALE DEVELOPMENT OWNERSHIP, LLC
901 PARKSTONE TOWNE BLVD.,
KNIGHTDALE, NC 27545
DESIGN DEVELOPMENT

NOT FOR CONSTRUCTION

PROGRESS DATE:			
ISSUE DATE: 09.14.2023			
REVISIONS: NUMBER	DATE	INITIALS	DESCRIPTION

PROJECT NO: 005221
DRAWN BY: AE, CL
CHECKED BY: BN

SHEET TITLE:
TRASH COMPACTOR DETAILS

SHEET NUMBER:
A708

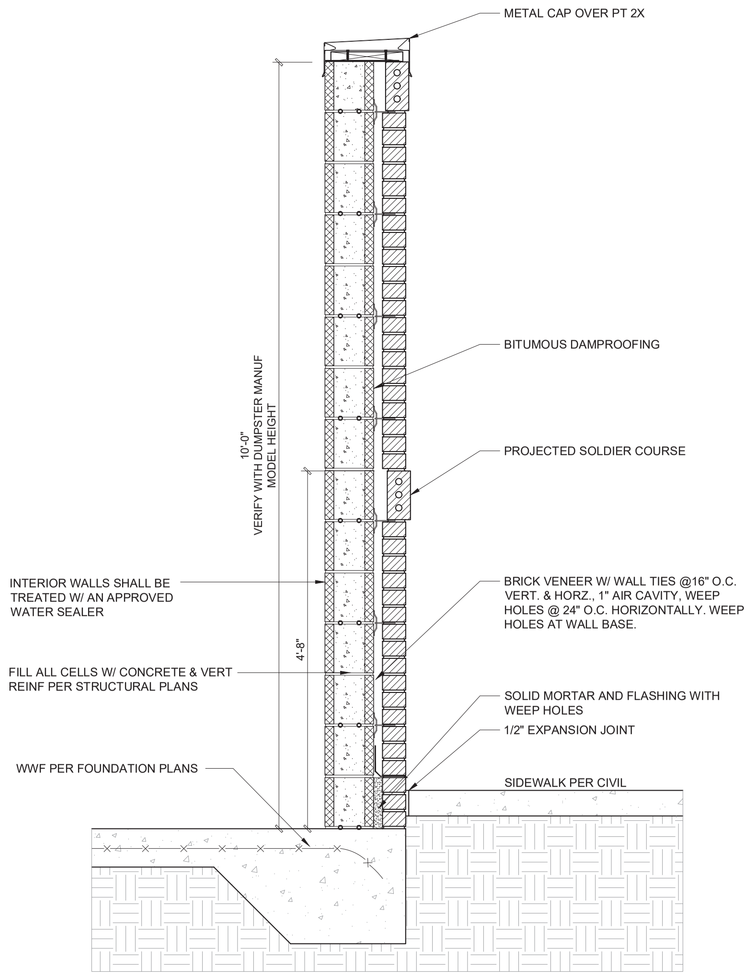

2 DUMPSTER ENCLOSURE - TYP WALL SECTION

SCALE: 3/4"=1'-0"

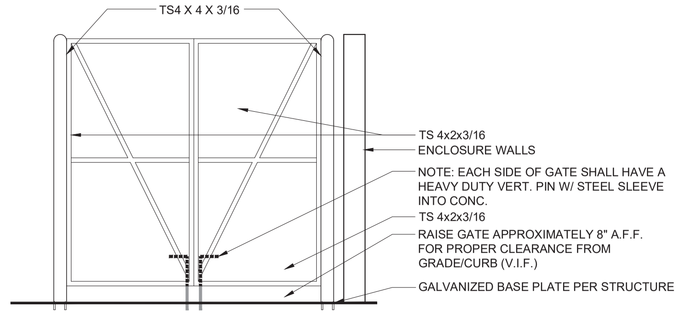

3 DUMPSTER ENCLOSURE - INSIDE GATE ELEVATION

SCALE: 1/4"=1'-0"

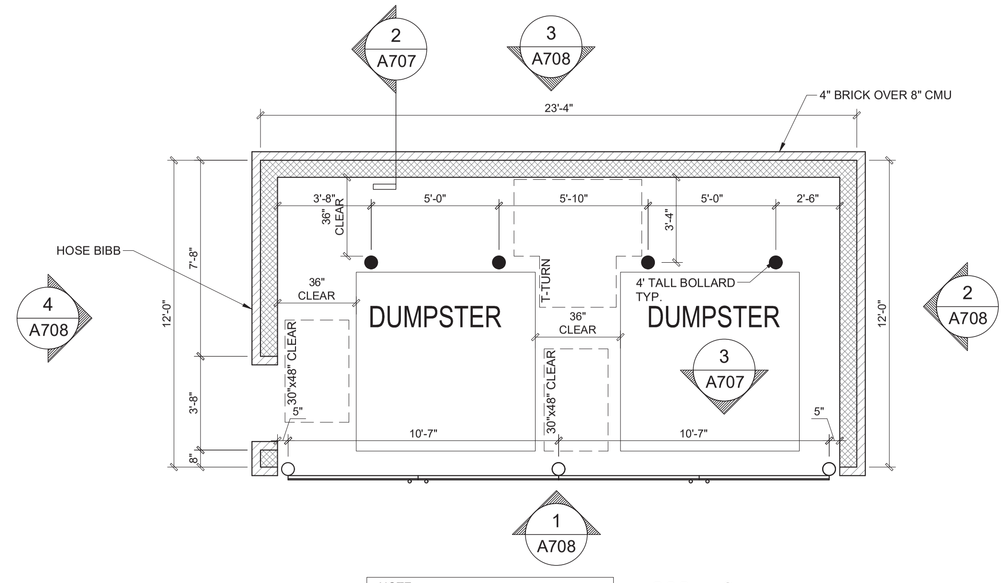

NOTE:
1-COORDINATE WITH DUMPSTER SELECTION PRIOR TO CONSTRUCTION VERIFY DOOR LOCATION AND COMPACTOR ORIENTATION WITH SITE PLAN LAYOUT.
2-ELECTRICAL AND HOSE BIBB WILL BE PER COMPACTOR ORIENTATION.
3-SEE CIVIL PLANS FOR SPOT ELEVATIONS OF FINISHED SLAB AND SIDEWALK SURFACES.
4-SEE CIVIL PLANS FOR STORM DRAINAGE REQUIRED BY LOCAL CODES.
5-COMPACTOR TO COMPLY WITH TOWN DESIGN AND DEVELOPMENT STANDARDS FOR TRASH ENCLOSURES
6-ALL HARDWARE TO BE HEAVY DUTY COMMERCIAL GRADE MATERIALS (METAL FRAMING, BOLTED/WELDED HINGES)
7-EQUIPMENT SHALL BE SINGLE PHASE ELECTRIC, TO BE COORDINATED BY MANUF AND ELECTRICAL CONTRACTOR.

288 sqft

1 DUMPSTER ENCLOSURE PLAN

SCALE: 1/4"=1'-0"

a. Town Certification. This design has been reviewed by the Engineer for the Town of Knightdale, and to the best of my knowledge and belief, it conforms to the requirements established in the Standard Specifications of the Town of Knightdale.

By: Samuel A. MacDonald Date: _____
Town Engineer

These plans are approved by the Town of Knightdale and serve as construction plans for this project.

By: Kevin Lewis Date: _____
Land Use Administrator

PLANWORX ARCHITECTURE
5711 SIX FORKS ROAD, SUITE 100
RALEIGH NC 27609
website www.planworx.com

PLANWORX ARCHITECTURE, P.A. REGISTERED ARCHITECTURAL CORPORATION CERT. NO. 50909 N.C. RALEIGH, NC

THE DEWITT | KNIGHTDALE
KNIGHTDALE DEVELOPMENT OWNERSHIP, LLC
901 PARKSTONE TOWNE BLVD.,
KNIGHTDALE, NC 27545
DESIGN DEVELOPMENT

NOT FOR CONSTRUCTION

PROGRESS DATE:	ISSUE DATE:	REVISIONS NUMBER	DATE	INITIALS	DESCRIPTION
09.14.2023					

PROJECT NO: 005221
DRAWN BY: AE, CL
CHECKED BY: BN

SHEET TITLE:
DUMPSTER ENCLOSURE PLAN

SHEET NUMBER:
A709

1. All drawings are to be coordinated with all site information by owner and contractor, and applicable codes.
2. Contractor is to notify architect immediately of conditions or items varying from depicted information.
3. Planworx Architecture, P.A. is not responsible for constructed variations from the information depicted.
4. Planworx Architecture, P.A. will not assume any liability for expenses associated with errors and omissions on these drawings unless offset by verified construction savings as a result of planworx architecture, P.A. Design.
5. Planworx Architecture, P.A. retains ownership of all of designs depicted and implied herein.
6. Planworx Architecture, P.A. is not responsible for estimating, maintaining, or regulating construction costs associated with these plans.

© Copyright 2023 - PLANWORX ARCHITECTURE, P.A. All rights reserved. Reproduction of this sheet, in whole or in part, is strictly prohibited. Plans may be used once by client. Unauthorized use strictly prohibited. PLANS NOT VALID FOR CONSTRUCTION W/O APPROPRIATE PROFESSIONAL SEALS.

a. **Town Certification.** This design has been reviewed by the Engineer for the Town of Knightdale, and to the best of my knowledge and belief, it conforms to the requirements established in the Standard Specifications of the Town of Knightdale.

By: Samuel A. MacDonald Date: _____
Town Engineer

These plans are approved by the Town of Knightdale and serve as construction plans for this project.

By: Kevin Lewis Date: _____
Land Use Administrator

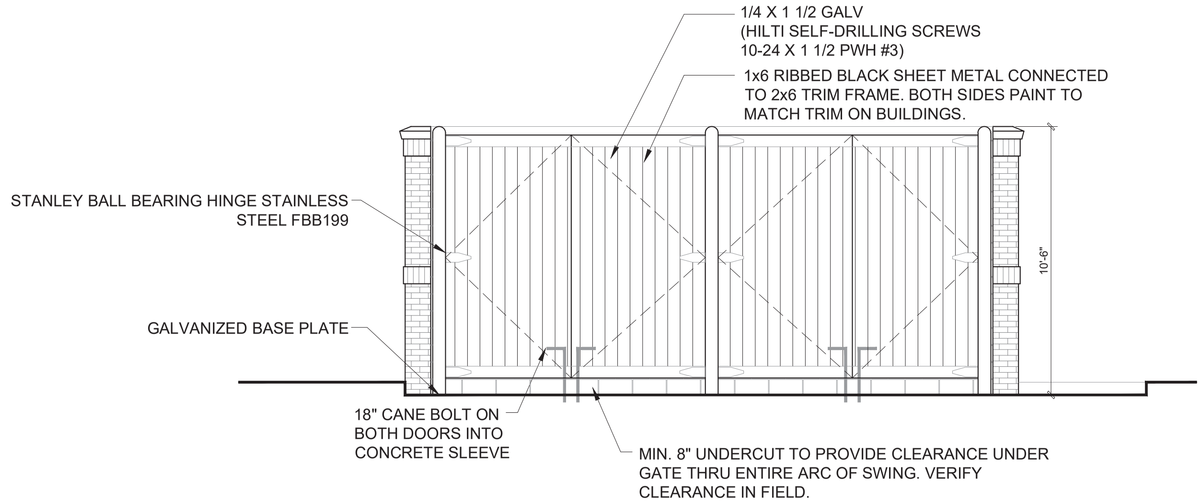

1 DUMPSTER ENCLOSURE - FRONT ELEVATION
SCALE: 1/4"=1'-0"

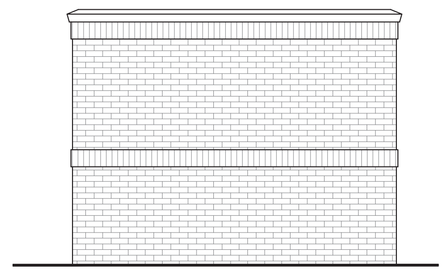

2 DUMPSTER ENCLOSURE - LEFT ELEVATION
SCALE: 1/4"=1'-0"

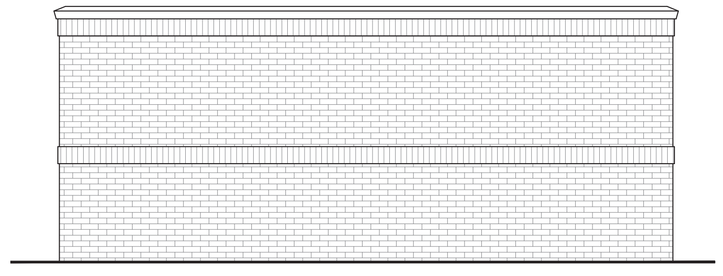

3 DUMPSTER ENCLOSURE - REAR ELEVATION
SCALE: 1/4"=1'-0"

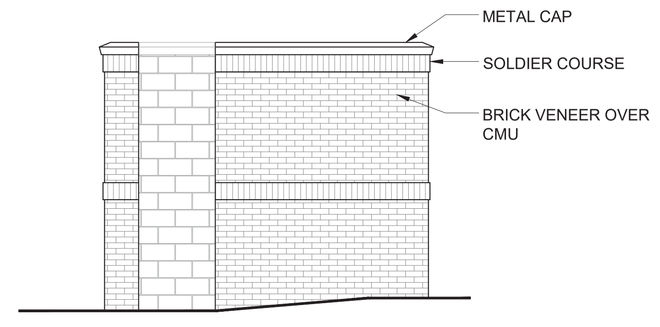

4 DUMPSTER ENCLOSURE - RIGHT ELEVATION
SCALE: 1/4"=1'-0"

PLANWORX
ARCHITECTURE
5711 SIX FORKS ROAD, SUITE 100
RALEIGH NC 27609
website www.planworx.com

PLANWORX ARCHITECTURE, PA
REGISTERED ARCHITECTURAL CORPORATION
CERT. NO. 50909
N.C.
RALEIGH, NC

THE DEWITT | KNIGHTDALE
KNIGHTDALE DEVELOPMENT OWNERSHIP, LLC
901 PARKSTONE TOWNE BLVD.,
KNIGHTDALE, NC 27545
DESIGN DEVELOPMENT

NOT FOR CONSTRUCTION

PROGRESS DATE:	REVISIONS: NUMBER	DATE	INITIALS	DESCRIPTION
ISSUE DATE: 09.14.2023				

PROJECT NO: 005221
DRAWN BY: AE, CL
CHECKED BY: BN

SHEET TITLE:
DUMPSTER ENCLOSURE ELEVS.

SHEET NUMBER:
A710

1. All drawings are to be coordinated with all site information by owner and contractor, and applicable codes.
2. Contractor is to notify architect immediately of conditions or items varying from depicted information.
3. Planworx Architecture, P.A. is not responsible for constructed variations from the information depicted.
4. Planworx Architecture, P.A. will not assume any liability for expenses associated with errors and omissions on these drawings unless offset by verified construction savings as a result of planworx architecture, P.A. Design.
5. Planworx Architecture, P.A. retains ownership of all of designs depicted and implied herein.
6. Planworx Architecture, P.A. is not responsible for estimating, maintaining, or regulating construction costs associated with these plans.

© Copyright 2023 - PLANWORX ARCHITECTURE, P.A. All rights reserved. Reproduction of this sheet, in whole or in part, is strictly prohibited. Plans may be used once by client. Unauthorized use strictly prohibited. PLANS NOT VALID FOR CONSTRUCTION W/O APPROPRIATE PROFESSIONAL SEALS.