DOWNTOWN NORTH AT KNIGHTDALE STATION

PHASE NUMBER	PHASE 1
NUMBER OF TOTAL RESIDENTIAL LOTS	147
OPEN SPACE?	YES
NUMBER OF OPEN SPACE LOTS	6
3" PUBLIC WATER (LF)	44 LF
6" PUBLIC WATER (LF)	1920 LF
8" PUBLIC WATER (LF)	4375 LF
12" PUBLIC WATER (LF)	939 LF
8" PUBLIC SEWER (LF)	5136 LF
PUBLIC STREET (LF)*	6885 LF
6' PUBLIC SIDEWALK (LF)	4861 LF
8' PUBLIC SIDEWALK (LF)	1825 LF
10' PUBLIC SIDEWALK (LF)	1043 LF
CURB AND GUTTER (LF)	13770 LF
PUBLIC STORM DRAINAGE	7322 LF
STREET SIGNS	69
WATER CONNECTIONS	151
SEWER CONNECTIONS	148
PUBLIC GREENWAY TRAIL (LF)	0 LF

* INCLUDES PUBLIC ALLEYS

DIMENSIONAL STANDARDS
NMX DISTRICT

LOT WIDTH	PROPOSED (PER PUD)	SINGLE FAMILY:	30'
		TOWNHOME:	18'
HEIGHT	PROPOSED (PER PUD)	60' (SEE PUD DOCUMENT FOR EXCEPTIONS)	
		STORIES:	4
SETBACKS (SINGLE FAMILY)	PROPOSED (PER PUD)	MIN. TO RIGHT OF WAY	
		FRONT PORCH/STOOP:	5'
		FRONT PRIMARY STRUCTURE:	10'
		FRONT EAVES:	N/A
		MIN. TO OPEN SPACE	
		FRONT PORCH/STOOP:	0'
		FRONT PRIMARY STRUCTURE:	3'
		FRONT EAVES:	N/A
		MIN. CORNER SIDE	
		TO PORCH/STOOP:	5'
		TO PRIMARY STRUCTURE:	5'
		TO EAVES:	N/A
		MIN. SIDE	
		TO PORCH/STOOP:	3'
		TO PRIMARY STRUCTURE:	3'
		TO EAVES:	N/A
		MIN. REAR	
		TO GARAGE FROM CURB:	7' (PARALLEL)
		TO GARAGE FROM CURB:	18' (90°)
SETBACKS (TOWNHOMES)	PROPOSED (PER PUD)	MIN. TO RIGHT OF WAY	
		FRONT PORCH/STOOP:	5'
		FRONT PRIMARY STRUCTURE:	10'
		FRONT EAVES:	N/A
		MIN. TO OPEN SPACE	
		FRONT PORCH/STOOP:	0'
		FRONT PRIMARY STRUCTURE:	3'
		FRONT EAVES:	N/A
		MIN. CORNER SIDE	
		TO PORCH/STOOP:	3'
		TO PRIMARY STRUCTURE:	5'
		TO EAVES:	N/A
		MIN. SIDE	
		INTERIOR UNIT:	0'
		END UNITS:	
		FRONT PORCH/STOOP:	0'
		SEPARATION BETWEEN PORCHES/STOOPS:	6'
		TO PRIMARY STRUCTURE:	0'
		SEPARATION BETWEEN BUILDINGS:	10'
		TO EAVES:	N/A
		MIN. REAR	
		TO GARAGE FROM CURB:	7' (PARALLEL)
		TO GARAGE FROM CURB:	18' (90°)

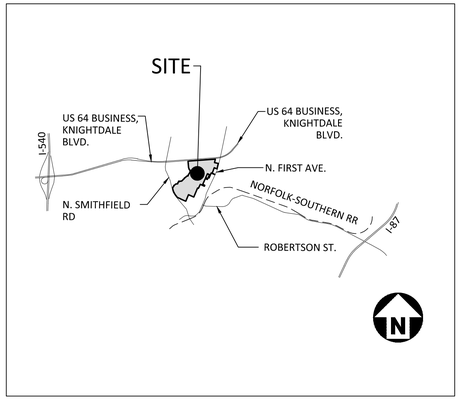

VICINITY MAP
1"=5000'

N SMITHFIELD ROAD
KNIGHTDALE, NORTH CAROLINA

CONSTRUCTION DRAWINGS

PHASE 1

PROJECT NUMBER: AGN-21002

DATE: FEBRUARY 16, 2024

CASE NUMBER: 791148
ZMA-13-22
ORDINANCE #: 23-01-18-003

ZONING CONDITIONS (ZMA-13-22)

1. RESIDENTIAL DRIVEWAYS SHALL BE A MINIMUM OF 18-FEET LONG.
2. TOWNHOME LOTS SHALL BE A MINIMUM OF 18-FEET WIDE.
3. REAR SETBACKS FOR ALL RESIDENTIAL LOTS SHALL BE A MINIMUM OF 18-FEET.
4. NO LANDSCAPED BUFFERS SHALL BE PROVIDED, HOWEVER ALLEY SCREENING SHALL BE PROVIDED AS INDICATED ON THE MASTER PLAN.
5. ALLEY SEPARATION MAY BE REDUCED TO AS LITTLE AS 50-FEET AS INDICATED ON THE MASTER PLAN.
6. THE RADIUS OF ALLEYS MAY BE REDUCED, AS INDICATED ON THE MASTER PLAN.
7. ARCHITECTURAL STANDARDS ARE PROVIDED FOR ALL BUILDING TYPES AS INDICATED IN THE PUD DOCUMENT.
8. THE APPLICANT AGREES THAT AN ELEMENT OF THE UTILITY ALLOCATION AND ANNEXATION AGREEMENT INCLUDE A PROVISION FOR FUTURE TOWN INVESTMENT. THIS INVESTMENT MAY INCLUDE, BUT IS NOT LIMITED TO, INFRASTRUCTURE, PARKING FACILITIES, STREETSCAPE ELEMENTS, STORMWATER CONTROL MEASURES, AND PUBLIC ART, CONSIDERATION FOR THIS INVESTMENT MAY INCLUDE, BUT IS NOT LIMITED TO, INCREASED DENSITY, EXPEDITED MIXED-USE PHASING SCHEDULES, ADDITIONAL STREETSCAPE ELEMENTS, TRANSPORTATION/TRANSIT IMPROVEMENTS AND INCREASED ARCHITECTURAL DESIGN/CONTROL. SHOULD THE TOWN CHOOSE NOT TO MAKE ANY SUCH INVESTMENT THIS CONDITION WILL NOT LIMIT OR DELAY THE DEVELOPMENT OF THE PROPERTY AS OUTLINED IN THE PLANNED UNIT DEVELOPMENT AND SUBJECT TO ALL OTHER ZONING CONDITIONS. NOTHING IN THIS CONDITION SHOULD OBLIGATE THE TOWN TO MAKE ANY SUCH INVESTMENT.
9. SHOULD THE DEVELOPER ACQUIRE ADDITIONAL LAND ADJACENT OR WITHIN A QUARTER MILE (.25) TO THE EXISTING PLANNED UNIT DEVELOPMENT ZONED HIGHWAY BUSINESS (HB) OR NEIGHBORHOOD MIXED-USE (NMX), THOSE PARCELS MAY BE INCORPORATED INTO THE DOWNTOWN NORTH PLANNED UNIT DEVELOPMENT SUBJECT TO A REZONING TO APPLY THE PLANNED UNIT DEVELOPMENT ONLY. THIS REZONING WILL NOT REQUIRE A SITE-SPECIFIC DEVELOPMENT PLAN OR ADDITIONAL STUDY UNTIL SUCJ TIME THAT A SITE PLAN IS SUBMITTED FOR ADMINISTRATIVE APPROVAL. THE DEVELOPMENT OF THE PARCELS SHOULD BE SUBJECT TO SITE PLAN REVIEW IN ACCORDANCE WITH THE PLANNED UNIT DEVELOPMENT INCLUDING THE ALLOWABLE USES, DESIGN GUIDELINES, AND PRECEDENT IMAGERY OF THE TOWN CENTER DISTRICT'S GATEWAY SUBDISTRICT STANDARDS.

CITY OF RALEIGH PUBLIC UTILITIES CONDITIONS OF APPROVAL:

1. A PETITION FOR ANNEXATION INTO THE CITY LIMITS SHALL BE SUBMITTED IN ACCORDANCE WITH CITY COUNCIL POLICY FOR EXTENSION OF UTILITY SERVICE TO PROPERTIES CURRENTLY OUTSIDE OF THE CITY LIMITS
2. CONSTRUCTION DRAWINGS MUST BE APPROVED BY THE CITY OF RALEIGH PUBLIC UTILITIES DEPARTMENT FOR ALL PUBLIC WATER, PUBLIC SEWER AND/OR PRIVATE SEWER EXTENSIONS PRIOR TO MAP RECORDATION.
3. A PLAT MUST BE RECORDED AT THE WAKE COUNTY REGISTER OF DEEDS OFFICE FOR ALL UTILITY EASEMENT DEDICATIONS
4. A DOWNSTREAM SEWER CAPACITY STUDY IN COMPLIANCE WITH CORPUD HANDBOOK SHALL BE SUBMITTED BY THE PROJECT ENGINEER FOR REVIEW AND APPROVAL PRIOR TO CONSTRUCTION DRAWINGS
5. THE DEVELOPER SHALL PROVIDE A LETTER OR E-MAIL FROM ANY PRIVATE UTILITY COMPANY AUTHORIZING NEW WATER AND SEWER MAIN ENCROACHMENTS ACROSS EXISTING TRANSMISSION EASEMENTS PRIOR TO CONCURRENT APPROVAL

ATTENTION CONTRACTORS

The **Construction Contractor** responsible for the extension of water, sewer, and/or reuse, as approved in these plans, is responsible for contacting the **Public Utilities Department** at **(919) 996–4540** at least **twenty four hours** prior to beginning any of their construction.

Failure to notify both **City Departments** in advance of beginning construction, will result in the issuance of **monetary fines**, and require reinstallation of any water or sewer facilities not inspected as a result of this notification failure.

Failure to call for **Inspection, Install a Downstream Plug**, have **Permitted Plans** on the **Jobsite**, or any other **Violation** of **City of Raleigh Standards** will result in a **Fine and Possible Exclusion** from future work in the **City of Raleigh.**

SITE DATA

PINS (PHASE 1)	1754239634, 1754333504, 1754335778, 1754337666, 1754450090		
SITE AREA (PHASE 1)	GROSS AREA:		26.98 AC
	PUBLIC R/W DEDICATION:		6.55 AC
	NET AREA:		20.43 AC
EROSION CONTROL AREA (PHASE 1)	TOTAL PHASE 1 AREA:		27.35 AC
	STAGE 1 AND 2 DISTURBED AREA:		24.00 AC.
	STAGE 3 AND 4 DISTURBED AREA:		3.35 AC.
	(ACREAGE PERMITTED VIA FRO:		27.50 AC.)
EXISTING ZONING	PUD - NMX		
WATERSHED CLASSIFICATION	LOWER NEUSE RIVER		
RIVER BASIN	NEUSE		
FEMA DATA	FIRM PANEL #3720175400K, DATED 7/19/2022		
EXISTING USE	VACANT		
PROPOSED USE (PHASE 1)	NMX - SINGLE FAMILY DETACHED, TOWNHOMES		
DENSITY (PHASE 1)	NMX 147 UNITS / 26.98 AC = 5.45 DU/AC SINGLE FAMILY = 45 (4 BEDROOM) UNITS 8 (5 BEDROOM) UNITS TOWNHOMES = 65 (3 BEDROOM) UNITS 29 (4 BEDROOM) UNITS		
PARKING (PHASE 1)	REQUIRED	2/UNIT x 177 UNITS = 354 SPACES	
	PROPOSED	2/UNIT x 177 UNITS = 354 SPACES ON-STREET: 127 SPACES	
OPEN SPACE (PHASE 1)	REQUIRED	N/A PER PUD CONDITION	
	PROPOSED	2.02 ACRES W/ PHASE 1 *SEE SHEET C2.00 FOR OPEN SPACE PROGRAMMING TABLE	
TREE SAVE (OVERALL DEVELOPMENT)	REQUIRED	5% PER PUD CONDITION	
	PROPOSED	5%	
CONNECTIVITY (OVERALL DEVELOPMENT)	REQUIRED	1.5 (PUD-NMX) & 1.6 (PUD-TC)	
	PROPOSED	1.573 (107 LINKS/68 NODES)	
ESTIMATED WASTEWATER FLOW RATES (15A NCAC 02T .0114) (PHASE 1)	SINGLE FAMILY HOMES	40 (4 BEDROOM) UNITS X 300 GPD = **12,000 GPD**	
		13 (5 BEDROOM) UNITS X 375 GPD = **4,875 GPD**	
	TOWNHOMES	55 (3 BEDROOM) UNITS X 225 GPD = **12,375 GPD**	
		39 (4 BEDROOM) UNITS X 300 GPD = **11,700 GPD**	
		TOTAL GPD = **40,950 GPD**	

WATER ALLOCATION POINTS

REQUIRED POINTS	50 POINTS (ALL PHASES)
PROPOSED POINTS	79 POINTS (ALL PHASES) (50 BASE POINTS (MIXED USE) + 29 BONUS POINTS)
ARCHITECTURAL DESIGN STANDARDS	15 POINTS
ANY OTHER POOL (FUTURE AMENITY)	1 POINT
ON-STREET PUBLIC PARKING	4 POINTS
CLUBHOUSE (FUTURE AMENITY)	5 POINTS
PUBLIC ART (FUTURE PHASE)	4 POINTS

CERTAIN ITEMS WITHIN THESE PLANS HAVE BEEN PRODUCED IN COLOR FOR CLARITY OF THE PLANS. THESE PLANS MUST BE PLOTTED IN COLOR TO BE VALID.

SHEET INDEX

C0.01	Project Notes	
C0.02	Typical Sections	
C1.00	Existing Conditions Plan	
C1.01	Existing Conditions Plan	
C1.02	Overall Tree Removal Plan	
C2.00	Overall Site Plan	
C2.01	Site Plan - Area "A"	
C2.02	Site Plan - Area "B"	
C2.03	Site Plan - Area "C"	
C2.04	Site Plan - Area "D"	
C2.10	Pavement Markings & Signage Plan	
C3.00	Overall Grading and Storm Drainage Plan	
C3.01	Grading Plan - Area "A"	
C3.02	Grading Plan - Area "B"	
C3.03	Grading Plan - Area "C"	
C3.04	Grading Plan - Area "D"	
C3.05	Storm Drainage Plan - Area "A"	
C3.06	Storm Drainage Plan - Area "B"	
C3.07	Storm Drainage Plan - Area "C"	
C3.08	Storm Drainage Plan - Area "D"	
C4.00	Overall Utility Plan	
C4.01	Utility Plan - Area "A"	
C4.02	Utility Plan - Area "B"	
C4.03	Utility Plan - Area "C"	
C4.04	Utility Plan - Area "D"	
C5.00	Plan and Profile - Fourth Avenue	STA. 16+50 THRU STA. 22+00
C5.01	Plan and Profile - Fourth Avenue	STA. 22+00 THRU STA. 28+00
C5.02	Plan and Profile - Fifth Avenue	STA. 9+50 THRU STA. 18+00
C5.03	Plan and Profile - Fifth Avenue	STA. 18+00 THRU STA. 26+00
C5.04	Plan and Profile - Sixth Avenue	
C5.05	Plan and Profile - Pine Street	
C5.06	Plan and Profile - Oakwood Street	STA. 9+50 THRU STA. 15+00
C5.07	Plan and Profile - Oakwood Street	STA. 15+00 THRU STA. 22+00
C5.08	Plan and Profile - Alley "1"	
C5.09	Plan and Profile - Alley "2"	
C5.10	Plan and Profile - Alley "3" & Alley "4"	
C5.11	Plan and Profile - Alley "5" & Alley "6"	
C5.12	Plan and Profile - Alley "7"	
C5.13	Plan and Profile - Alley "8"	
C5.14	Plan and Profile - Alley "9"	
C5.15	Plan and Profile - Alley "10"	
C5.16	Plan and Profile - Alley "11" & Amenity Parking	
C5.17	Plan and Profile - O-F100 & SMITHFIELD RD STORM-WATER TIE	
C5.18	Plan and Profile - Fourth Avenue (Future)	
C5.19	Plan and Profile - Greenways	
C8.00	Site Details	
C8.01	Site Details	
C8.02	Storm Details	
C8.03	Water Details	
C8.04	Water Details	
C8.05	Sanitary Sewer Details	
C8.06	Sanitary Sewer Details	
C9.00	SCM "A" Plan View	
C9.01	SCM "A" Details	
C9.02	SCM "A" Details	
C9.03	SCM "A" Details	
C9.04	SCM "A" Landscape Plan	
L5.00	Landscape Plan - Area "A"	
L5.01	Landscape Plan - Area "B"	
L5.02	Landscape Plan - Area "C"	
L5.03	Landscape Plan - Area "D"	
L5.04	Landscape Details	
L5.05	Landscape Details	
L5.06	Landscape Details	
L6.00	Duke Energy Site Lighting Arrangement	
	SUPPLEMENTAL PLANS	
	EROSION CONTROL PLANS	
	OFFSITE ROAD IMPROVEMENTS	

SEE SHEET C0.01 FOR ALL PROJECT, SITE, GRADING, STORM DRAINAGE AND UTILITY NOTES

ALL CONSTRUCTION SHALL BE IN ACCORDANCE WITH THE CURRENT TOWN OF KNIGHTDALE, CITY OF RALEIGH PUBLIC UTILITIES, AND NCDOT (WHERE APPLICABLE) ENGINEERING DESIGN AND CONSTRUCTION STANDARDS

SITE PERMITTING APPROVAL

Water and Sewer Permits (If applicable)

The City of Raleigh consents to the connection and extension of the City's Public Sewer System as shown on this plan. The material and Construction methods used for this project shall conform to the standards and specifications of the City's Public Utilities Handbook. City of Raleigh Public Utilities Department Permit # S-5378

The City of Raleigh consents to the connection and extension of the City's Public Water System as shown on this plan. The material and Construction methods used for this project shall conform to the standards and specifications of the City's Public Utilities Handbook. City of Raleigh Public Utilities Department Permit # W-4073

The City of Raleigh consents to the connection to its public sewer system and extension of the private sewer collection system as shown on this plan. The material and constructions methods used for this project shall conform to the standards and specifications of the City's Public Utilities Handbook.
City of Raleigh Public Utilities Department Permit # _____

CITY OF RALEIGH – PLANS AUTHORIZED FOR CONSTRUCTION

Plans for the proposed use have been reviewed for general compliance with applicable codes. This limited review, and authorization for construction is not to be considered to represent total compliance with all legal requirements for development and construction. The property owner, design consultants, and contractors are each responsible for compliance with all applicable City, State and Federal laws. This specific authorization below is not a permit, nor shall it be construed to permit any violation of City, State or Federal Law. All Construction must be in accordance with all Local, State, and Federal Rules and Regulations.

Electronic Approval: This approval is being issued electronically. This approval is valid only upon the signature of a City of Raleigh Review Officer below. The City will retain a copy of the approved plans. Any work authorized by this approval must proceed in accordance with the plans kept on file with the City. This electronic approval may not be edited once issued. Any modification to this approval once issued will invalidate this approval.

City of Raleigh Development Approval _____
City of Raleigh Review Officer

Professional Design Engineer Certification. These improvements shall be constructed in accordance with the following drawings and with the Standard Specifications of the Town of Knightdale.
I, _____, PE, certify that the Standard Specifications of the Town of Knightdale have been thoroughly checked and found to be applicable to this project. All exceptions to the applicable Town standards have been previously approved by the Town of Knightdale and said exceptions are shown on Sheet(s) _____ of these drawings.
Seal By: _____, PE
Date: _____

Town Approved Standards Shall Control. In the event of a conflict or inconsistency between these construction drawings and the Town of Knightdale's Approved Standards for this project, the Approved Standards shall control. Town of Knightdale Approved Standards shall mean all development documents necessary for approval for the Property including, but not limited to, any special use permit, subdivision plan, site plan, subdivision plat(s), phasing schedule, Development Agreement, Utility Allocation Agreement, Annexation Agreement, the Town of Knightdale Standard Specification and Details Manual and applicable provisions of the North Carolina State Building Code.

Town Certification. This design has been reviewed by the Engineer for the Town of Knightdale, and to the best of my knowledge and belief, it conforms to the requirements established in the Standard Specifications of the Town of Knightdale.
By: _____ Date: _____
Town Engineer
These plans are approved by the Town of Knightdale and serve as construction plans for this project.
By: _____ Date: _____
Administrator

FINAL DRAWING - RELEASED FOR CONSTRUCTION

MCADAMS
The John R. McAdams Company, Inc.
2905 Meridian Parkway
Durham, NC 27713

phone 919. 361. 5000
fax 919. 361. 2269
license number: C-0293, C-187

www.mcadamsco.com

CONTACT

TYLER PROBST
probst@mcadamsco.com
PHONE: 919. 287. 0844

CLIENT

ALLIANCE GROUP OF NC, LLC
7208 FALLS OF NEUSE RD, SUITE 101
RALEIGH, NORTH CAROLINA 27615
JACOB ANDERSON
PHONE: 919. 239. 9486

AGNC BROKERAGE | CONSULTING | PLANNING

PROJECT DIRECTORY

JPM SOUTH DEVELOPMENT
7208 FALLS OF NEUSE RD, SUITE 101
RALEIGH, NORTH CAROLINA 27615
JOHN MYERS
PHONE: 919. 306. 3330

JPM South DEVELOPMENT

NORTH CAROLINA PROFESSIONAL SEAL 051536 ENGINEER TYLER E. PROBST

REVISIONS

NO.	DATE	
1	----	----
2	----	----
3	----	----
4	----	----
5	----	----
6	----	----

CONSTRUCTION DRAWINGS FOR:
DOWNTOWN NORTH AT KNIGHTDALE STATION - PHASE 1
N SMITHFIELD ROAD
KNIGHTDALE, NORTH CAROLINA
PROJECT NUMBER: AGN-21002

M:\Projects\AGN\AGN21002\04-Production\Engineering\Current Drawing\Construction Drawings Sets\Phase-1\AGN21002-C51.dwg, 2/19/2024 4:53:12 PM, Tyler Probst

GENERAL NOTES

1. CONTRACTOR SHALL NOTIFY "NC811" (811) OR (1-800-632-4949) AT LEAST 3 FULL BUSINESS DAYS PRIOR TO BEGINNING CONSTRUCTION OR EXCAVATION TO HAVE EXISTING UTILITIES LOCATED. CONTRACTOR SHALL CONTACT ANY LOCAL UTILITIES THAT PROVIDE THEIR OWN LOCATOR SERVICES INDEPENDENT OF "NC811". REPORT ANY DISCREPANCIES TO THE ENGINEER IMMEDIATELY.
2. PRIOR TO BEGINNING CONSTRUCTION, THE GENERAL CONTRACTOR SHALL SCHEDULE AND ATTEND A PRECONSTRUCTION CONFERENCE WITH THE TOWN OF KNIGHTDALE, A REPRESENTATIVE OF THE OWNER, THE GRADING COMPANY, THE EROSION CONTROL INSTALLER, AND A REPRESENTATIVE FOR THE ENGINEER OF RECORD.
3. CONSTRUCTION, MAINTENANCE AND REMOVAL OF ALL EROSION CONTROL DEVICES ARE THE RESPONSIBILITY OF THE GENERAL CONTRACTOR. SEE EROSION CONTROL PLAN FOR SEQUENCING.
4. GRADING CONTRACTOR SHALL BE RESPONSIBLE TO GRADE EACH LOT SUCH THAT POSITIVE DRAINAGE FROM THE HOUSE FOUNDATION IS PROVIDED AND WATER FROM A HIGHER ELEVATION ON ADJOINING LOTS IS DIVERTED THROUGH THE USE OF SWALES ALONG LOT LINES. THE GRADING CONTRACTOR SHALL ALSO ENSURE THAT PONDING ON INDIVIDUAL LOTS WILL NOT BE CREATED.
5. EXISTING VEGETATION AND NATURAL AREAS SHALL BE PROTECTED TO THE GREATEST EXTENT POSSIBLE.
6. ALL PUBLIC STREETS & LANES MUST BE INSTALLED TO THE MINIMUM TOWN OF KNIGHTDALE STANDARDS SET FORTH IN THE STREET/SUBDIVISION DESIGN MANUAL OR THE CONDITIONS NOTED ON THE PLANS, WHICHEVER IS MORE STRINGENT.
7. ALL CONSTRUCTION SHALL BE IN ACCORDANCE WITH TOWN OF KNIGHTDALE, CITY OF RALEIGH AND NCDOT STANDARDS, SPECIFICATIONS AND DETAILS.
8. ALL EXISTING UTILITIES ARE SHOWN AT APPROXIMATE LOCATIONS. ACTUAL LOCATIONS AND DEPTHS TO BE CONFIRMED BY THE CONTRACTOR IN THE FIELD PRIOR TO BEGINNING CONSTRUCTION.
9. ALL DIMENSIONS SHOWN ARE TO BACK OF CURB UNLESS NOTED OTHERWISE.
10. PRIOR TO STARTING ANY CONSTRUCTION OF IMPROVEMENTS WITHIN ANY TOWN OR NCDOT STREET OR HIGHWAY RIGHT-OF-WAY, THE FOLLOWING PROCEDURES SHALL BE UNDERTAKEN: TOWN RIGHT-OF-WAY: CONTACT TOWN OF KNIGHTDALE ENGINEERING DEPARTMENT (919-217-2200) FOR INFORMATION ON DETOURS, OPEN CUTTING OF STREETS OR FOR ANY CONSTRUCTION WITHIN THE RIGHT-OF-WAY. NCDOT RIGHT-OF-WAY: CONTACT McADAMS COMPANY PROJECT ENGINEERS (919-361-5000) AND OBTAIN ALL PERMITS AND ENCROACHMENTS (KEEP COPIES ON CONSTRUCTION SITE), ALSO CONTACT NCDOT DISTRICT OFFICE (919-733-3213) 24 HOURS IN ADVANCE PRIOR TO PLACING CURB AND GUTTER AND TOWN OF KNIGHTDALE FOR SIDEWALKS AND RAMPS WITHIN NCDOT R/W.
11. ALL DIMENSIONS AND GRADES SHOWN ON THE PLANS SHALL BE VERIFIED BY THE CONTRACTOR PRIOR TO CONSTRUCTION. CONTRACTOR SHALL NOTIFY THE ENGINEER IF ANY DISCREPANCIES EXIST PRIOR TO PROCEEDING WITH CONSTRUCTION FOR NECESSARY PLAN OR GRADING CHANGES. NO EXTRA COMPENSATION SHALL BE PAID TO THE CONTRACTOR FOR ANY WORK DONE DUE TO DIMENSIONS OR GRADES SHOWN INCORRECTLY ON THESE PLANS IF SUCH NOTIFICATION HAS NOT BEEN GIVEN.
12. THE CONTRACTOR SHALL BE RESPONSIBLE FOR ESTABLISHING AND MAINTAINING ALL CONTROL POINTS AND BENCH MARKS NECESSARY.
13. DISPOSAL OF ALL DEMOLISHED MATERIALS IS THE RESPONSIBILITY OF THE CONTRACTOR AND MUST BE TAKEN OFF-SITE IN ACCORDANCE WITH ALL FEDERAL, STATE AND LOCAL MUNICIPAL REQUIREMENTS.
14. THE AREA OR AREAS OF ENTRANCE AND EXIT TO AND FROM THE SITE SHALL BE MAINTAINED IN A CONDITION WHICH WILL PREVENT TRACKING OR FLOWING OF SEDIMENT ONTO PUBLIC RIGHTS-OF-WAY. ALL SEDIMENT SPILLED, DROPPED, WASHED OR TRACKED ONTO PUBLIC RIGHTS-OF-WAY MUST BE REMOVED IMMEDIATELY.
15. NO SUBSTITUTION FOR SPECIFIED MATERIALS SHALL TAKE PLACE WITHOUT WRITTEN APPROVAL FROM THE OWNER. SAID APPROVAL MUST BE ACQUIRED PRIOR TO INSTALLATION. ANY COSTS FOR TESTING OR ENGINEERING SERVICES REQUIRED TO PROVE PROPOSED SUBSTITUTIONS ARE ACCEPTABLE SHALL BE PAID BY THE CONTRACTOR.
16. ALL SIGNS AND TRAFFIC CONTROL DEVICES SHALL BE IN COMPLIANCE WITH THE CURRENT EDITION OF THE MANUAL ON UNIFORM TRAFFIC CONTROL DEVICES (M.U.T.C.D.).
17. OCCUPATIONAL SAFETY AND HEALTH ADMINISTRATION (OSHA) STANDARDS FOR EXCAVATIONS; FINAL RULE 29CFR PART 1926, SUBPART "P" APPLIES TO ALL EXCAVATIONS EXCEEDING FIVE (5) FEET IN DEPTH. EXCAVATION EXCEEDING TWENTY (20) FEET IN DEPTH REQUIRES THE DESIGN OF A TRENCH SAFETY SYSTEM BY A REGISTERED PROFESSIONAL ENGINEER, PROVIDED BY CONTRACTOR RESPONSIBLE FOR EXCAVATION.
18. EXISTING IMPROVEMENTS DAMAGED DURING CONSTRUCTION SHALL BE REPLACED/RESTORED TO THEIR ORIGINAL CONDITION OR TO THE SATISFACTION OF THE OWNER BY THE CONTRACTOR RESPONSIBLE FOR THE DAMAGE.
19. CONTRACTOR IS RESPONSIBLE FOR COORDINATING CONSTRUCTION ACTIVITIES WITH THE APPROPRIATE UTILITY COMPANIES FOR ANY REQUIRED RELOCATION (I.E. POWER POLES, TELEPHONE PEDESTALS, WATER METERS, ETC.).
20. STREET LIGHTING WILL BE INSTALLED IN ACCORDANCE WITH THE TOWN OF KNIGHTDALE UNIFIED DEVELOPMENT ORDINANCE – LIGHTING PLANS SHALL BE BY OTHERS.
21. NONE OF THE SUBJECT PROPERTY IS WITHIN A SPECIAL FLOOD HAZARD AREA.
22. CURB & GUTTER DETAILS ARE SPECIFIC TO TOWN OF KNIGHTDALE UDO AND MSSD STANDARDS.
23. PAVEMENT DESIGN IS SHOWN AS A MINIMUM AND FINAL DESIGN TO BE DETERMINED BY GEOTECHNICAL ENGINEER.

SITE NOTES

1. OPEN SPACE TO BE MAINTAINED BY THE HOMEOWNERS ASSOCIATION.
2. ALL HOUSING DESIGN INFORMATION SHALL BE SUBMITTED TO THE TOWN OF KNIGHTDALE IN CONJUNCTION WITH BUILDING PERMIT PROCESS.
3. SITE PLANS WILL BE SUBMITTED TO THE TOWN OF KNIGHTDALE AND THE CITY OF RALEIGH FOR THE REMAINING FUTURE DEVELOPMENT AREAS WITHIN THE REMAINING PHASES.
4. EXISTING VEGETATION AND NATURAL AREAS SHALL BE PROTECTED TO THE GREATEST EXTENT POSSIBLE AND THAT MINIMUM CLEARING OF LAND SHALL BE UNDERTAKEN DURING DEVELOPMENT.
5. ALL PUBLIC SIDEWALKS/CROSSWALKS ACROSS ALLEY ENTRANCES SHALL BE FLUSH, CONCRETE PAVEMENT (SEE DETAIL).
6. CURB RADII ARE DIMENSIONED TO THE BACK OF CURB
7. ALL DIRECTIONAL ARROWS, PEDESTRIAN CROSSINGS, AND STOP BARS ON THE DEVELOPMENT SHALL BE THERMOPLASTIC.

PAVEMENT MARKINGS & SIGNAGE NOTES:

1. ALL PAVEMENT MARKINGS SHALL BE IN ACCORDANCE TO TOWN OF KNIGHTDALE STANDARD AND SPECIFICATIONS, LATEST REVISIONS.
2. ALL PAVEMENT MARKINGS SHALL BE THERMOPLASTIC IN ACCORDANCE WITH TOWN OF KNIGHTDALE STANDARDS.
3. ALL SIGNAGE SHALL BE IN ACCORDANCE WITH MUTCD, LATEST REVISION.
4. STREET NAME SIGNS SHALL FOLLOW THE TOWN OF KNIGHTDALE DETAIL 3.17.

Know what's **below.**
Call before you dig.

CONTRACTOR SHALL NOTIFY "NC811" (811) OR (1-800-632-4949) AT LEAST 3 FULL BUSINESS DAYS PRIOR TO BEGINNING CONSTRUCTION OR EXCAVATION TO HAVE EXISTING UTILITIES LOCATED. CONTRACTOR SHALL CONTACT ANY LOCAL UTILITIES THAT PROVIDE THEIR OWN LOCATOR SERVICES INDEPENDENT OF "NC811". REPORT ANY DISCREPANCIES TO THE ENGINEER IMMEDIATELY.

STORM DRAINAGE NOTES

1. ALL STORM DRAINAGE CONSTRUCTION SHALL BE IN ACCORDANCE WITH THE LATEST TOWN OF KNIGHTDALE STANDARDS.
2. ALL CONCRETE SHALL MEET A MINIMUM 3000 PSI COMPRESSIVE STRENGTH.
3. ALL PIPE IN STORM DRAIN STRUCTURES SHALL BE STRUCK EVEN WITH INSIDE WALL.
4. ALL PIPE JOINTS SHALL BE MADE WITH PREFORMED JOINT SEALER, WHICH CONFORMS TO AASHTO SPECIFICATION M-198 FOR TYPE B FLEXIBLE PLASTIC GASKETS UNLESS OTHERWISE NOTED.
5. THE INTERIOR SURFACES OF ALL STORM DRAINAGE STRUCTURES SHALL BE POINTED UP AND SMOOTHED TO AN ACCEPTABLE STANDARD USING MORTAR MIXED TO MANUFACTURER'S SPECIFICATIONS.
6. ALL BACKFILL SHALL BE NON-PLASTIC IN NATURE, FREE FROM ROOTS, VEGETATION MATTER, WASTE CONSTRUCTION MATERIAL OR OTHER OBJECTIONABLE MATERIAL. SAID MATERIAL SHALL BE CAPABLE OF BEING COMPACTED BY MECHANICAL MEANS AND SHALL HAVE NO TENDENCY TO FLOW OR BEHAVE IN A PLASTIC MANNER UNDER THE TAMPING BLOWS OR PROOF ROLLING.
7. MATERIALS DEEMED BY THE OWNER'S REPRESENTATIVE AS UNSUITABLE FOR BACKFILL PURPOSES SHALL BE REMOVED AND REPLACED WITH SUITABLE MATERIAL.
8. BACKFILLING OF TRENCHES SHALL BE ACCOMPLISHED IMMEDIATELY AFTER PIPE IS LAID. THE FILL AROUND THE PIPE SHALL BE THOROUGHLY COMPACTED TO 95% OF THE MAXIMUM DRY DENSITY OBTAINABLE WITH THE STANDARD PROCTOR TEST. THE TOP EIGHT (8) INCHES SHALL BE COMPACTED TO 100 PERCENT STANDARD PROCTOR.
9. UNDER NO CIRCUMSTANCES SHALL WATER BE ALLOWED TO RISE IN UNBACKFILLED TRENCHES AFTER PIPE HAS BEEN PLACED.
10. CONTRACTOR SHALL GRADE & INSTALL PREFORMED SCOUR HOLES, LEVEL SPREADERS AND VELOCITY DISSIPATERS PER DETAILS.
11. CONTRACTOR SHALL DETERMINE SPILL CURB LOCATIONS PRIOR TO PLACEMENT TO PROVIDE POSITIVE DRAINAGE TO DRAINAGE STRUCTURES. NO BIRD-BATHS SHALL BE ALLOWED WITHIN CURB AND GUTTER OR ASPHALT AREAS.

GRADING AND DRAINAGE NOTES

1. ALL DIMENSIONS AND GRADES SHOWN ON THE PLANS SHALL BE FIELD VERIFIED BY THE CONTRACTOR PRIOR TO CONSTRUCTION. CONTRACTOR SHALL NOTIFY THE ENGINEER IF ANY DISCREPANCIES EXIST PRIOR TO PROCEEDING WITH CONSTRUCTION. FOR NECESSARY PLAN OR GRADE CHANGES. NO EXTRA COMPENSATION SHALL BE PAID TO THE CONTRACTOR FOR ANY WORK DONE DUE TO DIMENSIONS OR GRADES SHOWN INCORRECTLY ON THESE PLANS IF SUCH NOTIFICATION HAS NOT BEEN GIVEN.
2. OCCUPATIONAL SAFETY AND HEALTH ADMINISTRATION (OSHA) STANDARDS FOR EXCAVATIONS; FINAL RULE 29CFR PART 1926, SUBPART "P" APPLIES TO ALL EXCAVATIONS EXCEEDING FIVE (5) FEET IN DEPTH. EXCAVATION EXCEEDING TWENTY (20) FEET IN DEPTH REQUIRES THE DESIGN OF A TRENCH SAFETY SYSTEM BY A REGISTERED PROFESSIONAL ENGINEER, PROVIDED BY CONTRACTOR RESPONSIBLE FOR EXCAVATION.
3. ALL CONSTRUCTION SHALL CONFORM TO THE LATEST TOWN OF KNIGHTDALE, CITY OF RALEIGH AND NCDOT (WHERE APPLICABLE) STANDARDS AND SPECIFICATIONS.
4. CONTRACTOR SHALL NOTIFY "NC811" (811) OR (1-800-632-4949) AT LEAST 3 FULL BUSINESS DAYS PRIOR TO BEGINNING CONSTRUCTION OR EXCAVATION TO HAVE EXISTING UTILITIES LOCATED. CONTRACTOR SHALL CONTACT ANY LOCAL UTILITIES THAT PROVIDE THEIR OWN LOCATOR SERVICES INDEPENDENT OF "NC811". REPORT ANY DISCREPANCIES TO THE ENGINEER IMMEDIATELY.
5. PRIOR TO BEGINNING CONSTRUCTION, THE GENERAL CONTRACTOR SHALL SCHEDULE AND ATTEND A PRECONSTRUCTION CONFERENCE WITH THE TOWN OF KNIGHTDALE, A REPRESENTATIVE OF THE OWNER, THE GRADING COMPANY, THE EROSION CONTROL INSTALLER, UTILITY CONTRACTOR, AND A REPRESENTATIVE FOR THE ENGINEER OF RECORD.
6. CONSTRUCTION, MAINTENANCE AND REMOVAL OF ALL EROSION CONTROL DEVICES ARE THE RESPONSIBILITY OF THE GENERAL CONTRACTOR. TIMING OF REMOVAL SHALL BE COORDINATED WITH THE EROSION CONTROL INSPECTOR.
7. EXISTING UTILITIES AND STRUCTURES SHOWN, BOTH UNDERGROUND AND ABOVE GROUND, ARE BASED ON A FIELD SURVEY AND THE BEST AVAILABLE RECORD DRAWINGS. THE CONTRACTOR SHALL VERIFY FIELD CONDITIONS PRIOR TO BEGINNING RELATED CONSTRUCTION. ANY DISCREPANCIES SHALL BE REPORTED TO THE ENGINEER IMMEDIATELY.
8. SOIL UNDER BUILDINGS, PAVED AREAS AND WITHIN SLOPES GREATER THAN 3:1 (H:V) SHALL BE APPROVED, PLACED AND COMPACTED AS RECOMMENDED BY THE GEOTECHNICAL ENGINEER.
9. GRADING CONTRACTOR SHALL BE RESPONSIBLE TO GRADE EACH LOT SUCH THAT POSITIVE DRAINAGE FROM THE HOUSE FOUNDATION IS PROVIDED AND WATER FROM A HIGHER ELEVATION ON ADJOINING LOTS IS DIVERTED THROUGH THE USE OF SWALES ALONG LOT LINES. THE GRADING CONTRACTOR SHALL ALSO ENSURE THAT PONDING ON INDIVIDUAL LOTS WILL NOT BE CREATED.
10. EXISTING VEGETATION AND NATURAL AREAS SHALL BE PROTECTED TO THE GREATEST EXTENT POSSIBLE.
11. ALL STORM DRAINAGE PIPE SHALL HAVE A MINIMUM COVER OF 2 FEET TO THE PIPE CROWN IN TRAFFIC, UNLESS APPROVED BY THE TOWN OF KNIGHTDALE.
12. ALL STORM DRAINAGE PIPE SHALL HAVE A MINIMUM COVER OF 1 FOOT TO THE PIPE CROWN IN NON-TRAFFIC AREAS.
13. STORM SEWER PIPE ENDS SHALL BE FURNISHED WITH REINFORCED CONCRETE PIPE FLARED END SECTION UNLESS OTHERWISE SPECIFIED ON PLANS
14. EACH DRAINAGE STRUCTURE SHALL HAVE A SHAPED INVERT CONSTRUCTED FROM CONCRETE PER TOWN OF KNIGHTDALE STANDARD SPECIFICATIONS
15. ENERGY DISSIPATER SHALL BE INSTALLED AT ALL STORM SEWER DISCHARGE POINTS. A FABRIC OR WASHED STONE BARRIER SHALL BE INSTALLED BETWEEN THE DISSIPATION PAD AND THE NATURAL GROUND.
16. STORM PIPE TRENCH EXCAVATION AND BACKFILLING SHALL BE PERFORMED IN ACCORDANCE WITH TOWN OF KNIGHTDALE STANDARD SPECIFICATIONS AND DETAILS. PLEASE CONTACT THE TOWN OF KNIGHTDALE DEVELOPMENT SERVICES ENGINEER PRIOR TO THE INSTALLATION OF ALL STORM DRAIN PIPE. STORMWATER CALCULATIONS ARE BASED ON A MAXIMUM 3,500 SF OF IMPERVIOUS AREA PER LOT.
17. ALL STORM DRAINAGE PIPE SHALL BE CLASS III REINFORCED CONCRETE PIPE (RCP) UNLESS NOTES OTHERWISE.
18. DISCHARGE BASED ON 10-YR STORM EVENT UNLESS NOTED OTHERWISE.
19. CB=CATCH BASIN: FES=FLARED END SECTION: JB=JUNCTION BOX; YI=YARD INLET; (TOK#5.03); DI=DROP INLET (TOK #5.04)
20. RIM ELEVATION GIVEN FOR CB IS TOP OF CURB, YI OPENING INVERT FOR SLAB TOP, DI IS TOP OF GRATE FOR GRATED INLET, JB IS TOP OF RIM.
21. "TOWN OF KNIGHTDALE DRAINAGE EASEMENT"=PUBLIC EASEMENT
22. ALL PUBLIC STORM DRAINAGE FRAMES, GRATES, & HOODS SHALL BE STAMPED W/ "DRAINS TO RIVER" IN ACCORDANCE WITH TOWN OF KNIGHTDALE STANDARDS.
23. THE USE OF WAFFLE BOXES IS NOT PERMITTED WITHIN PUBLIC RIGHT OF WAY AND PUBLIC DRAINAGE EASEMENTS.
24. THE CONTRACTOR WILL BE RESPONSIBLE FOR INSTALLING STEPS IN THE STORM DRAINAGE BLOSES GREATER THAN OR EQUAL TO 3'-6" DEPTH. THE STEPS SHALL BE INSTALLED ON 12 INCH CENTERS AND SECURED PER TOWN OF KNIGHTDALE SPECIFICATIONS.

STANDARD UTILITY NOTES (AS APPLICABLE)

1. ALL MATERIALS & CONSTRUCTION METHODS SHALL BE IN ACCORDANCE WITH CITY OF RALEIGH DESIGN STANDARDS, DETAILS & SPECIFICATIONS (REFERENCE: CORPUD HANDBOOK, CURRENT EDITION).
2. UTILITY SEPARATION REQUIREMENTS:
   A. A DISTANCE OF 100' SHALL BE MAINTAINED BETWEEN SANITARY SEWER & ANY PRIVATE OR PUBLIC WATER SUPPLY SOURCE SUCH AS AN IMPOUNDED RESERVOIR USED AS A SOURCE OF DRINKING WATER. IF ADEQUATE LATERAL SEPARATION CANNOT BE ACHIEVED, FERROUS SANITARY SEWER PIPE SHALL BE SPECIFIED & INSTALLED TO WATERLINE SPECIFICATIONS. HOWEVER, THE MINIMUM SEPARATION SHALL NOT BE LESS THAN 25' FROM A PRIVATE WELL OR 50' FROM A PUBLIC WELL.
   B. WHEN INSTALLING WATER &/OR SEWER MAINS, THE HORIZONTAL SEPARATION BETWEEN UTILITIES SHALL BE 10'. IF THIS SEPARATION CANNOT BE MAINTAINED DUE TO EXISTING CONDITIONS, THE VARIATION ALLOWED IS THE WATER MAIN IN A SEPARATE TRENCH WITH THE ELEVATION OF THE WATER MAIN AT LEAST 18" ABOVE THE TOP OF THE SEWER & MUST BE APPROVED BY THE PUBLIC UTILITIES DIRECTOR. ALL DISTANCES ARE MEASURED FROM OUTSIDE DIAMETER TO OUTSIDE DIAMETER.
   C. WHERE IT IS IMPOSSIBLE TO OBTAIN PROPER SEPARATION, OR ANYTIME A SANITARY SEWER PASSES OVER A WATERMAIN, DIP MATERIALS OR STEEL ENCASEMENT EXTENDED 10' ON EACH SIDE OF CROSSING MUST BE SPECIFIED & INSTALLED TO WATERLINE SPECIFICATIONS.
   D. 5.0' MINIMUM HORIZONTAL SEPARATION IS REQUIRED BETWEEN ALL SANITARY SEWER & STORM SEWER FACILITIES, UNLESS DIP MATERIAL IS SPECIFIED FOR SANITARY SEWER.
   E. MAINTAIN 18" MIN. VERTICAL SEPARATION AT ALL WATERMAIN & RCP STORM DRAIN CROSSINGS. MAINTAIN 24" MIN. VERTICAL SEPARATION AT ALL SANITARY SEWER & RCP STORM DRAIN CROSSINGS. WHERE ADEQUATE SEPARATIONS CANNOT BE ACHIEVED, SPECIFY DIP MATERIALS & A CONCRETE CRADLE HAVING 6" MIN. CLEARANCE (PER CORPUD DETAILS W-41 & S-49).
   F. ALL OTHER UNDERGROUND UTILITIES SHALL CROSS WATER & SEWER FACILITIES WITH 18" MIN. VERTICAL SEPARATION REQUIRED.
3. ANY NECESSARY FIELD REVISIONS ARE SUBJECT TO REVIEW & APPROVAL OF AN AMENDED PLAN &/OR PROFILE BY THE CITY OF RALEIGH PUBLIC UTILITIES DEPARTMENT PRIOR TO CONSTRUCTION.
4. CONTRACTOR SHALL MAINTAIN CONTINUOUS WATER & SEWER SERVICE TO EXISTING RESIDENCES & BUSINESSES THROUGHOUT CONSTRUCTION OF PROJECT. ANY NECESSARY SERVICE INTERRUPTIONS SHALL BE PRECEDED BY A 24 HOUR ADVANCE NOTICE TO THE CITY OF RALEIGH PUBLIC UTILITIES DEPARTMENT.
5. 3.0' MINIMUM COVER IS REQUIRED ON ALL WATER MAINS & SEWER FORCEMAINS. 4.0' MINIMUM COVER IS REQUIRED ON ALL REUSE MAINS.
6. IT IS THE DEVELOPER'S RESPONSIBILITY TO ABANDON OR REMOVE EXISTING WATER & SEWER SERVICES NOT BEING USED IN REDEVELOPMENT OF A SITE UNLESS OTHERWISE DIRECTED BY THE CITY OF RALEIGH PUBLIC UTILITIES DEPARTMENT. THIS INCLUDES ABANDONING TAP AT MAIN & REMOVAL OF SERVICE FROM ROW OR EASEMENT PER CORPUD HANDBOOK PROCEDURE.
7. INSTALL 3/4" COPPER* WATER SERVICES WITH METERS LOCATED AT ROW OR WITHIN A 2'X2' WATERLINE EASEMENT IMMEDIATELY ADJACENT. NOTE: IT IS THE APPLICANT'S RESPONSIBILITY TO PROPERLY SIZE THE WATER SERVICE FOR EACH CONNECTION TO PROVIDE ADEQUATE FLOW & PRESSURE.
8. INSTALL 4" PVC* SEWER SERVICES @ 1.0% MINIMUM GRADE WITH CLEANOUTS LOCATED AT ROW OR EASEMENT LINE & SPACED EVERY 75 LINEAR FEET MAXIMUM.
9. PRESSURE REDUCING VALVES ARE REQUIRED ON ALL WATER SERVICES EXCEEDING 80 PSI; BACKWATER VALVES ARE REQUIRED ON ALL SANITARY SEWER SERVICES HAVING BUILDING DRAINS LOWER THAN 1.0' ABOVE THE NEXT UPSTREAM MANHOLE.
10. ALL ENVIRONMENTAL PERMITS APPLICABLE TO THE PROJECT MUST BE OBTAINED FROM NCDWQ, USACE &/OR FEMA FOR ANY RIPARIAN BUFFER, WETLAND &/OR FLOODPLAIN IMPACTS (RESPECTIVELY) PRIOR TO CONSTRUCTION.
11. NCDOT / RAILROAD ENCROACHMENT AGREEMENTS ARE REQUIRED FOR ANY UTILITY WORK (INCLUDING MAIN EXTENSIONS & SERVICE TAPS) WITHIN STATE OR RAILROAD ROW PRIOR TO CONSTRUCTION.
12. GREASE INTERCEPTOR / OIL WATER SEPARATOR SIZING CALCULATIONS & INSTALLATION SPECIFICATIONS SHALL BE APPROVED BY THE CORPUD FOG PROGRAM COORDINATOR PRIOR TO ISSUANCE OF A BUILDING PERMIT. CONTACT TIM BEASLEY AT (919) 996-2334 OR TIMOTHY.BEASLEY@RALEIGHNC.GOV FOR MORE INFORMATION.
13. CROSS-CONNECTION CONTROL PROTECTION DEVICES ARE REQUIRED BASED ON DEGREE OF HEALTH HAZARD INVOLVED AS LISTED IN APPENDIX-B OF THE RULES GOVERNING PUBLIC WATER SYSTEMS IN NORTH CAROLINA. THESE GUIDELINES ARE THE MINIMUM REQUIREMENTS. THE DEVICES SHALL MEET AMERICAN SOCIETY OF SANITARY ENGINEERING (ASSE) STANDARDS OR BE ON THE UNIVERSITY OF SOUTHERN CALIFORNIA APPROVAL LIST. THE DEVICES SHALL BE INSTALLED AND TESTED (BOTH INITIAL AND PERIODIC TESTING THEREAFTER) IN ACCORDANCE WITH THE MANUFACTURER'S RECOMMENDATIONS OR THE LOCAL CROSS-CONNECTION CONTROL PROGRAM, WHICHEVER IS MORE STRINGENT. CONTACT JOANIE HARTLEY AT (919) 996-5923 OR JOANIE.HARTLEY@RALEIGHNC.GOV FOR MORE INFORMATION.

ADDITIONAL UTILITY NOTES

1. ALL WATER SERVICE LINES WHERE 1 TO 2 UNITS CONNECT SHALL BE 1" HDPE SDR9 LINE. ALL WATER SERVICE LINES WHERE 3 OR MORE UNITS CONNECT SHALL BE 2" HDPE SDR9 LINE.
2. ALL SEWER MAINS SHALL BE EITHER PVC OR DUCTILE IRON PIPE AS SHOWN ON THE PLANS. ALL PIPE MATERIAL SHALL MEET CITY OF RALEIGH STANDARDS AND SPECIFICATIONS AS DEFINED IN THE LATEST ISSUE OF THE PUBLIC UTILITIES HANDBOOK AND/OR UNIFIED DEVELOPMENT ORDINANCE (UDO).
3. ALL FIRE HYDRANTS ALONG PUBLIC R/W LINES SHALL HAVE A 3'Wx3'L CITY OF RALEIGH WATERLINE EASEMENT ONTO ADJACENT PROPERTY.
4. ALL SANITARY SEWER INTERCEPTOR LINES (12" AND LARGER), AS WELL AS MANHOLES AND FITTINGS ASSOCIATED WITH THE INTERCEPTOR LINE, SHALL BE INTERNALLY LINED WITH PROTECTO 401 OR APPROVED EQUAL TO PREVENT HYDROGEN SULFIDE CORROSION. SEE THE CURRENT CITY OF RALEIGH PUBLIC UTILITIES DEPARTMENT HANDBOOK FOR APPROVED COATINGS AND APPLICATION METHODS.
5. IN ACCORDANCE WITH GENERAL STATUTE 87-121(G), ALL UNDERGROUND UTILITIES INSTALLED AFTER OCTOBER 1, 2014 SHALL BE ELECTRONICALLY LOCATABLE. CONTRACTOR SHALL COORDINATE DIRECTLY WITH THE CITY OF RALEIGH PUBLIC UTILITIES DEPARTMENT FOR DETAILS AND SPECIFICATIONS FOR MEETING THESE REQUIREMENTS.
6. EXISTING UTILITIES SHOWN ARE BASED ON FIELD SURVEYS AND THE BEST AVAILABLE RECORD DRAWINGS. THE CONTRACTOR SHALL VERIFY CONDITIONS PRIOR TO BEGINNING CONSTRUCTION. ANY DISCREPANCIES BETWEEN ACTUAL FIELD CONDITIONS AND THE PLANS SHALL BE REPORTED TO THE ENGINEER IMMEDIATELY.
7. ALL WATER AND SEWER MAINS WITHIN PUBLIC EASEMENTS OR RIGHTS-OF-WAY TO BE OWNED, OPERATED, AND MAINTAINED BY THE CITY OF RALEIGH.
8. ALL WATER AND SEWER MAINS NOT WITHIN PUBLIC EASEMENTS OR RIGHTS-OF-WAY TO BE PRIVATELY OWNED, OPERATED, AND MAINTAINED BY THE PROPERTY OWNER.
9. CONTRACTOR SHALL NOTIFY "NC811" (811) OR (1-800-632-4949) AT LEAST 3 FULL BUSINESS DAYS PRIOR TO BEGINNING CONSTRUCTION OR EXCAVATION TO HAVE EXISTING UTILITIES LOCATED. CONTRACTOR SHALL CONTACT ANY LOCAL UTILITIES THAT PROVIDE THEIR OWN LOCATOR SERVICES INDEPENDENT OF "NC811". REPORT ANY DISCREPANCIES TO THE ENGINEER IMMEDIATELY.
10. ALL UTILITY SLEEVES SHALL BE SCHEDULE 40 PVC AND INSTALLED WITH 2' MINIMUM COVER. BOTH ENDS SHALL BE CAPPED AND MARKED.

RETAINING WALL NOTES

1. THE RETAINING WALL ALIGNMENT SHOWN ON THESE PLANS DEPICTS THE LOCATION OF THE FRONT/BOTTOM FACE OF THE RETAINING WALL.
2. RETAINING WALLS SHALL BE DESIGNED BY A REGISTERED NORTH CAROLINA PROFESSIONAL ENGINEER AND PROVIDED AS A STANDALONE CONSTRUCTION DRAWING SET TO THE TOWN OF KNIGHTDALE FOR APPROVAL PRIOR TO THE ISSUANCE OF BUILDING PERMITS.
3. RETAINING WALLS SHALL BE ASSUMED TO BE BACKFILLED WITH OFF-SITE BORROW MATERIAL OR PROCESSED FILL UNLESS DESIGN ENGINEER CAN PROVIDE OWNER WITH CONFIRMATION FROM THE GEOTECHNICAL ENGINEER THAT READILY AVAILABLE ON-SITE SOILS CAN BE USED.
4. THE TOP AND BOTTOM OF WALL ELEVATIONS SHOWN ON THESE PLANS IDENTIFY FINISHED GRADE ELEVATIONS ONLY. THE EXTENT THAT THE RETAINING WALL WILL EXTEND BELOW GRADE TO THE FOOTING SHALL BE IDENTIFIED ON THE RETAINING WALL CONSTRUCTION DRAWINGS.
5. RETAINING WALLS GREATER THAN 30" IN HEIGHT SHALL HAVE A RAILING OR FENCE INSTALLED AT THE TOP OF WALL. RAILING DESIGN SHALL BE INCLUDED IN THE RETAINING WALL CONSTRUCTION DRAWINGS.
6. RETAINING WALL DESIGNER SHALL BE RESPONSIBLE FOR IDENTIFYING AND REPORTING TO THE ENGINEER THE REQUIRED SPACING, CLEARANCE, OR CONFLICTS BETWEEN THE FOOTPRINT OF THE WALL AND ANY ADJACENT SURFACE/SUB-SURFACE UTILITIES. WALL DESIGNER SHALL ALSO BE RESPONSIBLE FOR REVIEW AND APPROVAL OF ALL WALL RELATED SHOP DRAWINGS/SUBMITTALS.
7. CONTRACTOR SHALL ENSURE THAT WALL BATTER DOES NOT ENCROACH INTO BUFFERS, ADJACENT PROPERTIES, SIDEWALKS, ETC.

STORMWATER CONTROL MEASURE NOTES:

1. SEE SHEETS C9.00 – C9.03

ALL CONSTRUCTION SHALL BE IN ACCORDANCE WITH THE CURRENT TOWN OF KNIGHTDALE, CITY OF RALEIGH PUBLIC UTILITIES, AND NCDOT (WHERE APPLICABLE) ENGINEERING DESIGN AND CONSTRUCTION STANDARDS

Town Certification. This design has been reviewed by the Engineer for the Town of Knightdale, and to the best of my knowledge and belief, it conforms to the requirements established in the Standard Specifications of the Town of Knightdale.
By: _____ Date: _____
Town Engineer
These plans are approved by the Town of Knightdale and serve as construction plans for this project.
By: _____ Date: _____
Administrator

FINAL DRAWING - RELEASED FOR CONSTRUCTION

McADAMS
The John R. McAdams Company, Inc.
2905 Meridian Parkway
Durham, NC 27713

phone 919. 361. 5000
fax 919. 361. 2269
license number: C-0293, C-187

www.mcadamsco.com

CLIENT

ALLIANCE GROUP OF NC, LLC
7208 FALLS OF NEUSE RD, SUITE 101
RALEIGH, NORTH CAROLINA 27615
JACOB ANDERSON
PHONE: 919. 239. 9486

AGNC

DOWNTOWN NORTH AT KNIGHTDALE STATION
CONSTRUCTION DRAWINGS - PHASE 1
N SMITHFIELD ROAD
KNIGHTDALE, NORTH CAROLINA

NORTH CAROLINA PROFESSIONAL SEAL 051536 ENGINEER TYLER E. PROBST

REVISIONS

NO.	DATE	
1	----	----
2	----	----
3	----	----
4	----	----
5	----	----
6	----	----

PLAN INFORMATION

PROJECT NO.	AGN-21002
FILENAME	AGN21002-N1
CHECKED BY	JCM / TEP
DRAWN BY	MRC / LRS / RAD
SCALE	N.T.S.
DATE	02. 16. 2024

SHEET

PROJECT NOTES

C0.01

M:\Projects\AGN\AGN21002\04-Production\Engineering\Current Drawings\Construction Drawings Sets\Phase-1\AGN21002-N1.dwg, 2/16/2024 1:47:22 PM, John Martin

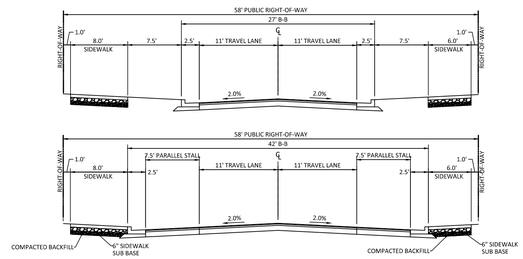

30" STANDARD CURB AND GUTTER
6/8' CONCRETE SIDEWALK

POSTED SPEED 25 MPH

PARALLEL PARKING WITHIN STALLS

TYPICAL SECTION
PINE STREET
(58' R/W, 27'/42' B-B)

PAVEMENT SECTION (LOCAL STREET SECTION)
2.5" S9.5A SURFACE COURSE
8" CABC

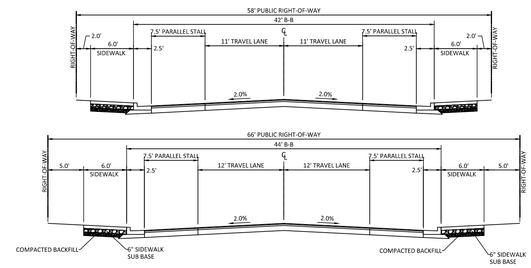

30" STANDARD CURB AND GUTTER
6' CONCRETE SIDEWALK

POSTED SPEED 25 MPH

PARALLEL PARKING WITHIN STALLS

TYPICAL SECTION
OAKWOOD STREET
(66'/58' R/W, 29'/42' B-B)

PAVEMENT SECTION (LOCAL STREET SECTION)
2.5" S9.5A SURFACE COURSE
8" CABC

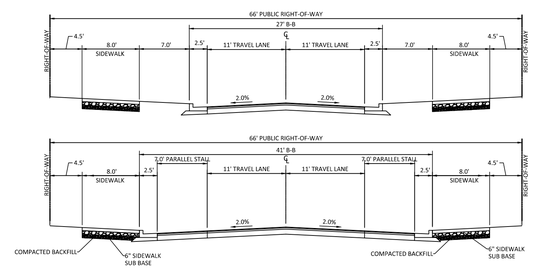

30" STANDARD CURB AND GUTTER
8' CONCRETE SIDEWALK

POSTED SPEED 25 MPH

PARALLEL PARKING WITHIN STALLS

TYPICAL SECTION
FOURTH AVENUE (100' POWER ESMT TO OAKWOOD ST)
(66' R/W, 27'/41' B-B)

PAVEMENT SECTION (AVENUE SECTION)
1.5" S9.5B
2.5" I 19.0B
8" ABC

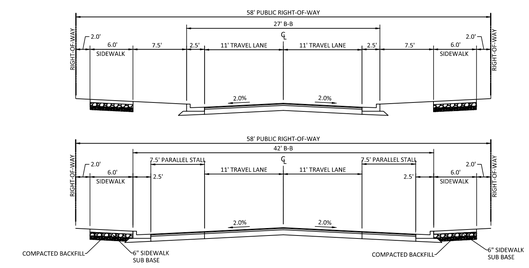

30" STANDARD CURB AND GUTTER
6' CONCRETE SIDEWALK

POSTED SPEED 25 MPH

PARALLEL PARKING WITHIN STALLS

TYPICAL SECTION
FIFTH AVENUE
SIXTH AVENUE
(58' R/W, 27'/42' B-B)

PAVEMENT SECTION (LOCAL STREET SECTION)
2.5" S9.5A SURFACE COURSE
8" CABC

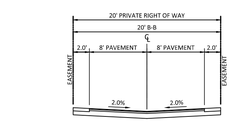

2' GUTTER
POSTED SPEED 10 MPH

TYPICAL SECTION
PRIVATE ALLEY
4-6,8,10
(20' PVT R/W, 20' B-B)

PAVEMENT SECTION
2.5" S9.5A SURFACE COURSE
8" CABC

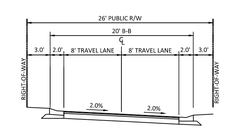

2' VALLEY CURB AND GUTTER
POSTED SPEED 10MPH

TYPICAL SECTION
PUBLIC ALLEY
2,3,7,9
(26' R/W, 20' B-B)

PAVEMENT SECTION
2.5" S9.5A SURFACE COURSE
8" CABC

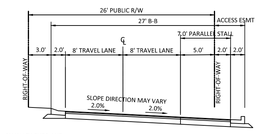

2' VALLEY CURB AND GUTTER
POSTED SPEED 10MPH
PARALLEL PARKING WITHIN STALLS
2' STANDARD CURB AND GUTTER ALONG PARKING

TYPICAL SECTION
PUBLIC ALLEY
1&3
(26' R/W, 27.5' B-B)

PAVEMENT SECTION
2.5" S9.5A SURFACE COURSE
8" CABC

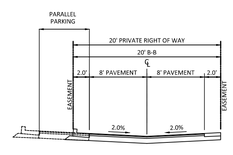

2' STANDARD CURB & GUTTER
2' GUTTER
POSTED SPEED 10 MPH

TYPICAL SECTION
PRIVATE ALLEY
8,10,11

PAVEMENT SECTION
2.5" S9.5A SURFACE COURSE
8" CABC

PAVEMENT SECTION NOTE:

PAVEMENT SECTIONS SHOWN ARE FROM TOWN OF KNIGHTDALE STANDARD DETAILS. CONTRACTOR TO VERIFY PAVEMENT SECTIONS WITH GEOTECHNICAL REPORT. IF PAVEMENT SECTIONS IN THE GEOTECHNICAL REPORT DIFFER FROM THE PAVEMENT SECTION SHOWN ON THESE PLANS, CONTRACTOR TO USE THE GREATER OF THE TWO SECTIONS.

ALL MATERIAL & CONSTRUCTION METHODS SHALL BE IN ACCORDANCE WITH ALL CITY OF RALEIGH & TOWN OF KNIGHTDALE DESIGN STANDARDS, DETAILS, AND SPECIFICATIONS

Town Certification. This design has been reviewed by the Engineer for the Town of Knightdale, and to the best of my knowledge and belief, it conforms to the requirements established in the Standard Specifications of the Town of Knightdale.
By: _____ Date: _____
Town Engineer
These plans are approved by the Town of Knightdale and serve as construction plans for this project.
By: _____ Date: _____
Administrator

PRELIMINARY DRAWING - NOT RELEASED FOR CONSTRUCTION

MCADAMS
The John R. McAdams Company, Inc.
2905 Meridian Parkway
Durham, NC 27713

phone 919. 361. 5000
fax 919. 361. 2269
license number: C-0293, C-187

www.mcadamsco.com

CLIENT

ALLIANCE GROUP OF NC, LLC
7208 FALLS OF NEUSE RD, SUITE 101
RALEIGH, NORTH CAROLINA 27615
JACOB ANDERSON
PHONE: 919. 239. 9486

AGNC
BROKERAGE | CONSULTING | PLANNING

DOWNTOWN NORTH AT KNIGHTDALE STATION
CONSTRUCTION DRAWINGS - PHASE 1
N SMITHFIELD ROAD
KNIGHTDALE, NORTH CAROLINA

NORTH CAROLINA PROFESSIONAL SEAL 051536 ENGINEER TYLER E. PROBST

REVISIONS

NO.	DATE	
1	----	----
2	----	----
3	----	----
4	----	----
5	----	----
6	----	----

PLAN INFORMATION

PROJECT NO.	AGN-21002
FILENAME	AGN21002-TS1
CHECKED BY	JCM / TEP
DRAWN BY	RAD / RJF
SCALE	N.T.S.
DATE	02. 16. 2024

SHEET

TYPICAL SECTIONS

C0.02

M:\Projects\AGN\AGN21002\04-Production\Engineering\Current Drawings\Construction Drawings Sets\Phase-1\AGN21002-TS1.dwg, 2/16/2024 1:47:34 PM, John Martin

© 2023 Bass, Nixon & Kennedy, Inc. expressly reserves its common law copyright and other property rights in these plans. These plans are not to be reproduced, changed or copied in any form or manner whatsoever, nor are they to be assigned to any third party without, first obtaining the expressed written permission and consent of Bass, Nixon & Kennedy, Inc.

REVISIONS			
NO.	DATE	DESCRIPTION	BY
1			

LEGEND

- P.O.B. = POINT OF BEGINNING
- P.O.C. = POINT OF COMMENCEMENT
- EIP = EXISTING IRON PIPE
- EIR = EXISTING IRON REBAR
- CP = CALCULATED POINT
- MON = CONCRETE MONUMENT
- A/C PAD
- COMM. MANHOLE
- CURB INLET
- ELECTRIC METER
- ELECTRIC TRANSFORMER
- F.E.S. = FLARED END SECTION
- FIBER-OPTIC PEDESTAL
- FIBER-OPTIC VAULT
- FIRE HYDRANT
- GAS VALVE
- GUY WIRE
- MAIL BOX
- SANITARY SEWER CLEAN OUT
- SANITARY SEWER MANHOLE
- SIGN
- STREET LIGHT
- TELEPHONE PEDESTAL
- TELEVISION PEDESTAL
- TRAFFIC SIGNAL POLE
- TRAFFIC SIGNAL BOX
- U/G GAS TEST STATION
- U/G FIBER-OPTIC MARKER
- UTILITY POLE
- WATER METER
- WATER VALVE
- WELL
- YARD INLET

- CREEK BUFFER
- DRAINAGE EASEMENT
- FENCE LINE
- GREENWAY EASEMENT
- O.H.E. = OVER-HEAD ELECTRIC LINE
- RIGHT-OF-WAY
- SANITARY SEWER LINE
- STORM LINE
- UTILITY EASEMENT
- U/G ELECTRIC
- U/G GAS
- U/G COMMUNICATION LINE

NORTH CAROLINA PROFESSIONAL SEAL L-5240 LAND SURVEYOR JOHN CHEEK 12-22-23

CURVE TABLE				
CURVE	RADIUS	LENGTH	CHORD DIRECTION	CHORD
C1	79.50'	115.72'	N 17°11'31" W	105.77'
C2	50.00'	34.55'	N 39°05'30" W	33.87'
C3	250.00'	65.45'	N 11°47'44" W	65.26'
C4	30.00'	47.14'	N 40°42'56" E	42.44'
C5	14.50'	22.78'	S 40°43'39" W	20.51'
C6	10.50'	18.72'	S 55°21'23" E	16.34'
C7	10.50'	9.51'	S 47°36'34" W	9.19'
C8	60.00'	27.20'	S 34°38'37" W	26.96'
C9	10.50'	9.51'	S 21°40'41" W	9.19'
C10	533.00'	109.76'	S 01°37'37" W	109.57'

LINE TABLE			LINE TABLE		
LINE	BEARING	DISTANCE	LINE	BEARING	DISTANCE
L1	S 13°28'44" W	174.29'	L65	N 15°10'37" E	21.53'
L2	S 13°28'44" W	217.48'	L66	N 23°51'54" W	17.87'
L3	N 66°24'30" W	207.06'	L67	N 18°36'35" E	28.39'
L4	N 69°43'34" W	203.92'	L68	N 41°21'40" E	35.56'
L5	S 13°51'26" W	205.26'	L69	N 12°14'04" E	14.17'
L6	S 20°22'28" W	164.99'	L70	N 71°44'17" E	39.47'
L7	S 24°10'24" W	35.02'	L71	N 21°53'57" W	44.63'
L8	S 24°09'17" W	104.98'	L72	N 29°51'38" E	15.96'
L9	S 24°08'46" W	105.05'	L73	N 81°08'19" E	43.14'
L10	S 65°52'18" E	209.93'	L74	S 67°11'44" E	20.20'
L11	S 24°08'07" W	17.51'	L75	S 02°49'43" E	12.97'
L12	N 66°05'56" W	66.00'	L76	N 80°06'58" E	15.19'
L13	S 66°21'35" E	150.00'	L77	N 89°06'36" E	24.21'
L14	S 23°28'39" W	65.96'	L78	N 67°57'09" E	41.23'
L15	N 66°09'17" W	150.00'	L79	S 82°06'55" E	50.55'
L16	S 66°09'17" E	150.00'	L80	N 48°17'53" E	19.16'
L17	S 23°59'14" W	65.95'	L81	N 22°17'04" E	21.74'
L18	S 24°16'57" W	149.99'	L82	S 75°03'31" E	17.95'
L19	S 24°14'06" W	156.95'	L83	N 47°35'21" E	28.93'
L20	N 67°07'21" W	66.08'	L84	N 44°56'18" E	53.77'
L21	N 22°52'39" E	74.09'	L85	N 34°46'51" E	19.51'
L22	N 66°07'18" W	156.10'	L86	N 74°19'18" E	19.74'
L23	S 23°25'45" W	66.00'	L87	N 13°58'56" W	20.55'
L24	S 24°02'49" W	75.00'	L88	N 49°19'51" E	18.49'
L25	N 65°57'11" W	155.72'	L89	N 79°19'40" E	23.72'
L26	S 23°49'50" W	75.00'	L90	N 51°10'32" E	42.86'
L27	N 65°57'11" W	156.57'	L91	N 17°21'57" E	31.88'
L28	N 24°02'49" E	150.00'	L92	N 14°36'32" E	22.98'
L29	S 65°57'11" E	66.00'	L93	N 32°04'11" E	14.66'
L30	S 65°57'11" E	150.00'	L94	N 84°26'43" E	22.55'
L31	N 65°57'11" W	150.00'	L95	N 58°00'40" E	38.86'
L32	S 23°49'50" W	66.00'	L96	N 29°29'16" E	25.22'
L33	S 65°57'11" E	150.00'	L97	N 85°57'39" E	16.55'
L34	S 23°49'50" W	150.00'	L98	N 46°29'04" E	44.49'
L35	N 65°57'39" W	150.00'	L99	N 36°16'20" E	27.46'
L36	N 23°49'50" E	150.02'	L100	N 51°10'35" E	39.61'
L37	N 51°14'27" E	18.56'	L101	N 81°01'39" E	23.24'
L38	N 37°08'13" W	87.37'	L102	S 70°32'40" E	15.85'
L39	N 36°57'53" W	89.87'	L103	N 58°37'47" E	14.92'
L40	N 35°51'05" W	86.73'	L104	S 80°43'49" E	16.00'
L41	N 31°55'27" W	105.21'	L105	N 62°44'24" E	14.71'
L42	N 26°39'23" W	51.43'	L106	N 24°38'27" E	32.54'
L43	N 26°39'23" W	35.83'	L107	N 24°58'11" W	12.47'
L44	N 18°46'18" W	96.35'	L108	N 36°33'57" E	15.72'
L45	N 14°22'39" W	96.18'	L109	N 19°42'37" W	11.61'
L46	N 12°30'44" W	17.00'	L110	N 34°39'16" E	49.59'
L47	N 12°30'44" W	88.45'	L111	N 26°59'20" E	41.06'
L48	N 55°46'51" E	20.00'	L112	S 60°42'21" E	40.60'
L49	N 54°04'06" W	141.09'	L113	N 36°47'32" E	21.62'
L50	N 35°36'37" W	50.00'	L114	N 30°15'00" E	39.16'
L51	N 54°23'23" E	20.00'	L115	N 20°16'23" E	23.26'
L52	N 35°36'37" W	24.00'	L116	N 59°39'41" E	13.59'
L53	N 54°23'23" E	20.00'	L117	N 14°49'53" E	44.67'
L54	N 35°36'37" W	24.00'	L118	N 31°06'51" E	7.91'
L55	N 05°59'40" E	39.14'	L119	N 34°37'50" W	62.68'
L56	N 73°52'35" E	18.54'	L120	N 19°17'41" W	97.57'
L57	N 24°39'50" E	80.70'	L121	N 73°33'36" E	30.00'
L58	N 51°50'47" E	33.59'	L122	S 04°16'21" E	66.00'
L59	N 22°54'00" E	33.19'	L123	S 73°33'36" W	28.40'
L60	N 76°06'44" E	41.43'	L124	S 04°16'21" E	21.10'
L61	N 88°06'16" E	45.00'	L125	S 94°14'09" E	100.00'
L62	N 88°03'54" E	43.50'	L126	S 23°59'22" W	170.50'
L63	N 88°03'54" E	20.12'	L127	S 21°05'56" W	76.59'
L64	N 83°49'41" E	22.74'	L128	N 34°14'09" W	98.94'

NOTE:
THE LOCATIONS OF UNDERGROUND UTILITIES AS SHOWN HEREON ARE BASED ON OBSERVED ABOVE GROUND STRUCTURES. FIELD MARKINGS AND DRAWINGS PROVIDED TO THE SURVEYOR. LOCATIONS OF UNDERGROUND UTILITIES/STRUCTURES MAY VARY FROM LOCATIONS SHOWN HEREON. ADDITIONAL BURIED UTILITIES/STRUCTURES MAY BE ENCOUNTERED. NO EXCAVATIONS WERE MADE DURING THE PROGRESS OF THIS SURVEY TO LOCATE BURIED UTILITIES/STRUCTURES. BEFORE EXCAVATIONS ARE BEGUN, FIELD LOCATIONS AND THE TYPE OF UTILITIES/STRUCTURES SHOULD BE VERIFIED.

Town Approval: Town of Knightdale Code: In the event of a conflict or inconsistency between Knightdale construction drawings and the Town of Knightdale's Approved Standards, the Project shall follow the Approved Standards shall control. Notwithstanding Knightdale shall be entitled to review and approval of all development documents for approval for, by, or on behalf of Knightdale, including, but not limited to, Special use permits, subdivision plans, site plans, individual lot plans, phasing schedule, Development Agreement, Utility Allocation Agreement, Annexation Agreement, the Town Code of Knightdale, Knightdale Standards Manual, Specifications and Details Manual and applicable provisions of the North Carolina Residential Building Code.

Town Certification: This plan has been reviewed by the Engineer for the Town of Knightdale, and to the best of my knowledge and belief, it conforms to the Town's requirements for Knightdale. The Standards and Specifications of the Town of Knightdale.

Town Engineer: Date:

Administrator: Date:

These plans are approved for the Town of Knightdale and is to be construed as plans for this project.

SCALE: 1" = 100'

BASS, NIXON & KENNEDY, INC.
CONSULTING ENGINEERS
•5910 CHAPEL HILL ROAD, SUITE 250, RALEIGH, NORTH CAROLINA 27607
•TELEPHONE: (919)851-4422 or (800)354-1879
•FAX: (919)851-8862
•CERTIFICATION NUMBERS: NCBELS (C-0110); NCBLA (C-0267)

JOB NO.	DATE	DRAWN BY	CHK BY
21312	12-22-2023	CWC	DG

OFFSITE SEWER OUTFALL EXISTING CONDITIONS SURVEY
FOR
SUGGS ASSEMBLAGE
WAKE COUNTY
SAINT MATTHEWS TOWNSHIP
NORTH CAROLINA

SHEET 5 OF 5

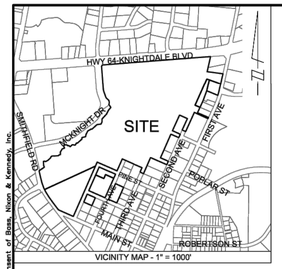

VICINITY MAP - 1" = 1000'

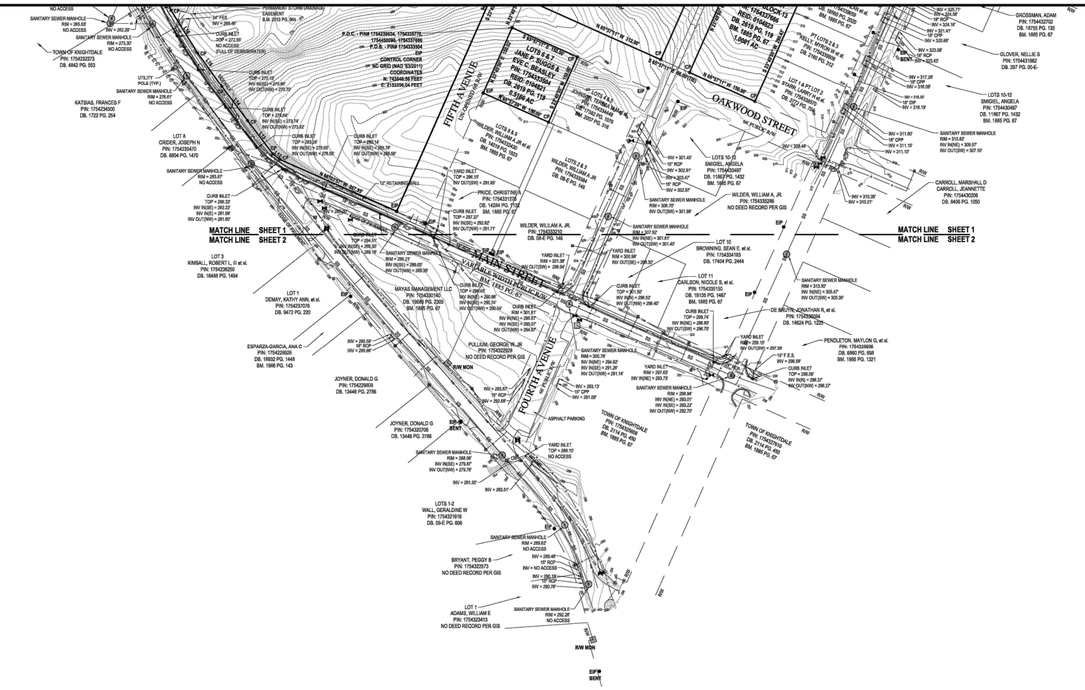

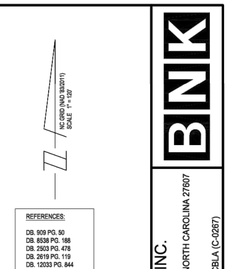

REFERENCES:

DB. 909 PG. 50
DB. 8538 PG. 188
DB. 2303 PG. 478
DB. 2619 PG. 119
DB. 13033 PG. 844
DB. 1885 PG. 67
BM. 1885 PG. 141
BM. 1928 PG. 114

CURVE TABLE				
CURVE	RADIUS	LENGTH	CHORD DIRECTION	CHORD
C1	78.50'	118.72'	N 17°11'31" W	108.27'
C2	60.00'	34.85'	N 39°35'32" W	34.37'
C3	200.00'	65.48'	N 11°47'44" W	65.26'
C4	30.00'	47.14'	N 42°42'06" E	42.44'

LINE TABLE		
LINE	BEARING	DISTANCE
L1	S 24°10'06" W	36.02'
L2	S 24°08'07" W	17.91'
L3	N 66°35'06" W	66.00'
L4	N 23°54'04" E	229.18'
L5	N 23°54'04" E	75.00'
L6	S 23°28'39" W	65.96'
L7	S 23°28'14" W	65.89'
L8	N 87°02'31" W	66.08'
L9	N 23°10'39" E	74.09'
L10	S 24°02'49" W	75.00'
L11	S 23°49'00" W	75.00'
L12	N 61°54'31" W	18.06'
L13	N 37°08'13" W	87.37'
L14	N 36°07'52" W	89.47'
L15	N 35°51'06" W	86.73'
L16	N 31°55'31" W	108.27'
L17	N 36°39'03" W	51.45'
L18	N 36°39'06" W	35.82'
L19	N 18°46'18" W	96.35'
L20	N 14°43'06" W	96.18'
L21	N 10°36'52" W	88.44'
L22	N 02°46'55" E	9.96'
L23	N 05°46'51" E	57.91'
L24	N 04°16'06" W	11.13'
L25	N 37°36'53" E	41.96'
L26	N 71°11'60" E	15.49'
L27	N 10°50'36" W	35.66'
L28	N 38°32'03" E	24.84'
L29	N 05°19'40" E	38.14'
L30	N 72°53'08" E	18.54'
L31	N 54°39'02" E	60.10'
L32	N 51°55'47" E	33.59'
L33	N 23°34'00" E	35.19'
L34	N 78°06'44" E	41.43'
L35	N 86°24'42" E	45.09'
L36	N 88°56'18" E	43.00'
L37	N 39°03'54" E	20.10'
L38	N 82°49'44" E	22.74'
L39	N 15°10'53" E	21.53'
L40	N 23°01'54" W	17.47'
L41	N 18°36'30" E	28.39'
L42	N 41°21'46" E	35.06'
L43	N 12°14'04" E	14.17'
L44	N 21°46'17" E	39.47'
L45	N 21°53'52" E	44.83'
L46	N 28°31'39" E	15.96'
L47	N 41°39'18" E	43.14'
L48	S 87°11'44" E	20.20'
L49	S 10°48'40" E	12.85'
L50	N 80°58'06" E	15.19'
L51	N 89°06'39" E	24.21'
L52	N 87°50'59" E	41.23'
L53	S 82°05'05" E	50.55'
L54	N 44°17'53" E	19.10'
L55	N 22°17'04" E	21.74'
L56	S 75°03'31" E	17.60'
L57	N 47°39'21" E	26.93'
L58	N 44°56'16" E	53.77'
L59	N 34°45'01" E	19.01'
L60	N 74°18'18" E	19.74'
L61	N 13°58'58" W	20.55'
L62	N 40°15'01" E	16.40'
L63	N 79°19'40" E	23.72'
L64	N 51°15'32" E	42.86'
L65	N 17°21'57" E	31.88'
L66	N 14°36'32" E	22.08'
L67	N 32°04'11" E	14.66'
L68	N 84°39'40" E	22.03'
L69	N 59°50'40" E	38.80'
L70	N 29°39'18" E	25.22'
L71	N 85°52'39" E	16.05'
L72	N 46°35'55" E	44.49'
L73	N 36°18'55" E	27.46'
L74	N 51°15'32" E	39.61'
L75	N 81°51'38" E	25.24'
L76	S 70°32'42" E	15.85'
L77	N 58°24'47" E	14.92'
L78	S 80°42'49" E	16.00'
L79	N 82°44'56" E	14.71'
L80	N 24°39'21" E	32.54'
L81	N 24°55'11" W	13.47'
L82	N 36°31'51" E	15.72'
L83	N 18°42'37" W	11.61'
L84	N 34°39'18" E	49.93'
L85	N 26°50'01" E	41.00'
L86	N 55°42'21" E	40.60'
L87	N 16°41'32" E	21.62'
L88	N 30°11'05" E	39.18'
L89	N 20°10'23" E	23.26'
L90	N 39°39'41" E	13.59'
L91	N 44°45'03" E	44.67'
L92	N 58°51'09" E	9.91'
L93	N 34°25'50" W	62.68'
L94	N 19°17'47" W	57.37'

O.H.E. ELEVATION TABLE		
NO.	ELEV.	HEIGHT
1	338.34'	53.22'
2	339.25'	55.52'
3	338.34'	55.52'
4	322.62'	55.60'
5	322.72'	56.01'
6	322.62'	56.42'
7	348.30'	53.09'
8	348.58'	50.89'
9	348.71'	49.02'
10	337.45'	41.87'
11	337.59'	40.26'
12	337.73'	38.65'
13	348.86'	50.80'
14	349.30'	49.72'
15	348.84'	48.46'
16	345.34'	43.08'
17	345.20'	41.33'
18	345.18'	39.57'
19	365.11'	50.54'
20	365.36'	50.06'
21	365.15'	49.05'
22	361.28'	36.97'
23	361.51'	36.43'
24	361.73'	35.89'
25	376.08'	49.89'
26	376.28'	49.67'
27	376.17'	49.15'
28	361.00'	41.65'
29	361.31'	41.93'
30	361.55'	42.23'
31	380.11'	51.90'
32	379.43'	50.98'
33	379.90'	49.89'
34	366.04'	32.75'
35	366.38'	32.49'
36	366.87'	32.22'
37	369.64'	36.93'
38	370.01'	36.65'
39	370.20'	35.77'
40	370.92'	38.21'
41	371.31'	37.95'
42	371.48'	37.05'
43	374.03'	37.41'
44	374.37'	37.02'
45	374.70'	36.63'
46	389.97'	49.43'
47	390.22'	49.30'
48	391.23'	50.44'

LEGEND

- P.O.B. = POINT OF BEGINNING
- P.O.C. = POINT OF COMMENCEMENT
- EIP = EXISTING IRON PIPE
- EIR = EXISTING IRON REBAR
- CP = CALCULATED POINT
- MON = CONCRETE MONUMENT
- CURB INLET
- F.E.S. = FLARED END SECTION
- YARD INLET
- FIRE HYDRANT
- WATER METER
- WATER VALVE
- WELL
- GUY WIRE
- STREET LIGHT
- TRAFFIC SIGNAL POLE
- TRAFFIC SIGNAL BOX
- UTILITY POLE
- SANITARY SEWER CLEAN OUT
- SANITARY SEWER MANHOLE
- GAS VALVE
- COMMUNICATIONS MANHOLE
- FIBER-OPTIC VAULT
- TELEPHONE PEDESTAL
- TELEVISION PEDESTAL
- U/G GAS TEST STATION
- U/G FIBER-OPTIC MARKER
- MAIL BOX
- SIGN

FENCE LINE
STORM LINE
SANITARY SEWER LINE
O.H.E. = OVER-HEAD ELECTRIC LINE
RIGHT-OF-WAY
UTILITY EASEMENT
GREENWAY EASEMENT
DRAINAGE EASEMENT
CREEK BUFFER

Town Approved Standards Shall Control. In the event of a conflict or inconsistency between these construction drawings and the Town of Knightdale's Approved Standards for this project, the Approved Standards shall control. Town of Knightdale Approved Standards shall mean all development documents necessary for approval for the Property including, but not limited to, any special use permit, subdivision plan, site plan, subdivision plat(s), phasing schedule, Development Agreement, Utility Allocation Agreement, Annexation Agreement, the Town of Knightdale Standard Specification and Details Manual and applicable provisions of the North Carolina State Building Code.

Town Certification. This design has been reviewed by the Engineer for the Town of Knightdale, and to the best of my knowledge and belief, it conforms to the requirements established in the Standard Specifications of the Town of Knightdale.
By: _____ Date: _____
Town Engineer
These plans are approved by the Town of Knightdale and serve as construction plans for this project.
By: _____ Date: _____
Administrator

OWNERS:

JANE P. SUGGS
EVE C. BEASLEY
ERROL M. MITCHELL
JULIE P. MITCHELL

SCALE: 1" = 120'

0 60 120 240 360 480

©2003 Bass, Nixon & Kennedy, Inc. expressly reserves its common law copyright and other property rights in these plans. These plans are not to be reproduced, changed or copied in any form or manner whatsoever, nor are they to be assigned to any third party without first obtaining the expressed written permission and consent of Bass, Nixon & Kennedy, Inc.

NO.	DATE	DESCRIPTION	BY
4	3-14-23	UPDATED WITH ADDITIONAL TOPO	CWC
3	7-27-22	REV PER COMMENTS #2	CWC
2	7-25-22	REV PER COMMENTS #1	CWC
1	7-19-22	REV PER UPDATED COMMITMENTS	CWC

2/1312 | 4-29-2022 | CWC
JOB NO. | DATE | DRAWN BY
SCALE: 1" = 120' | CHK BY: DG

BNK
BASS, NIXON & KENNEDY, INC.
CONSULTING ENGINEERS
•8910 CHAPEL HILL ROAD, SUITE 250, RALEIGH, NORTH CAROLINA 27607
•TELEPHONE: (919)851-1422 or (800)354-1879
•FAX: (919)851-8892
•CERTIFICATION NUMBERS: NCBELS (C-0110); NCBLA (C-0267)

ALTA/NSPS LAND TITLE SURVEY
OF
SUGGS ASSEMBLAGE
WAKE COUNTY
NORTH CAROLINA
SAINT MATTHEWS TOWNSHIP

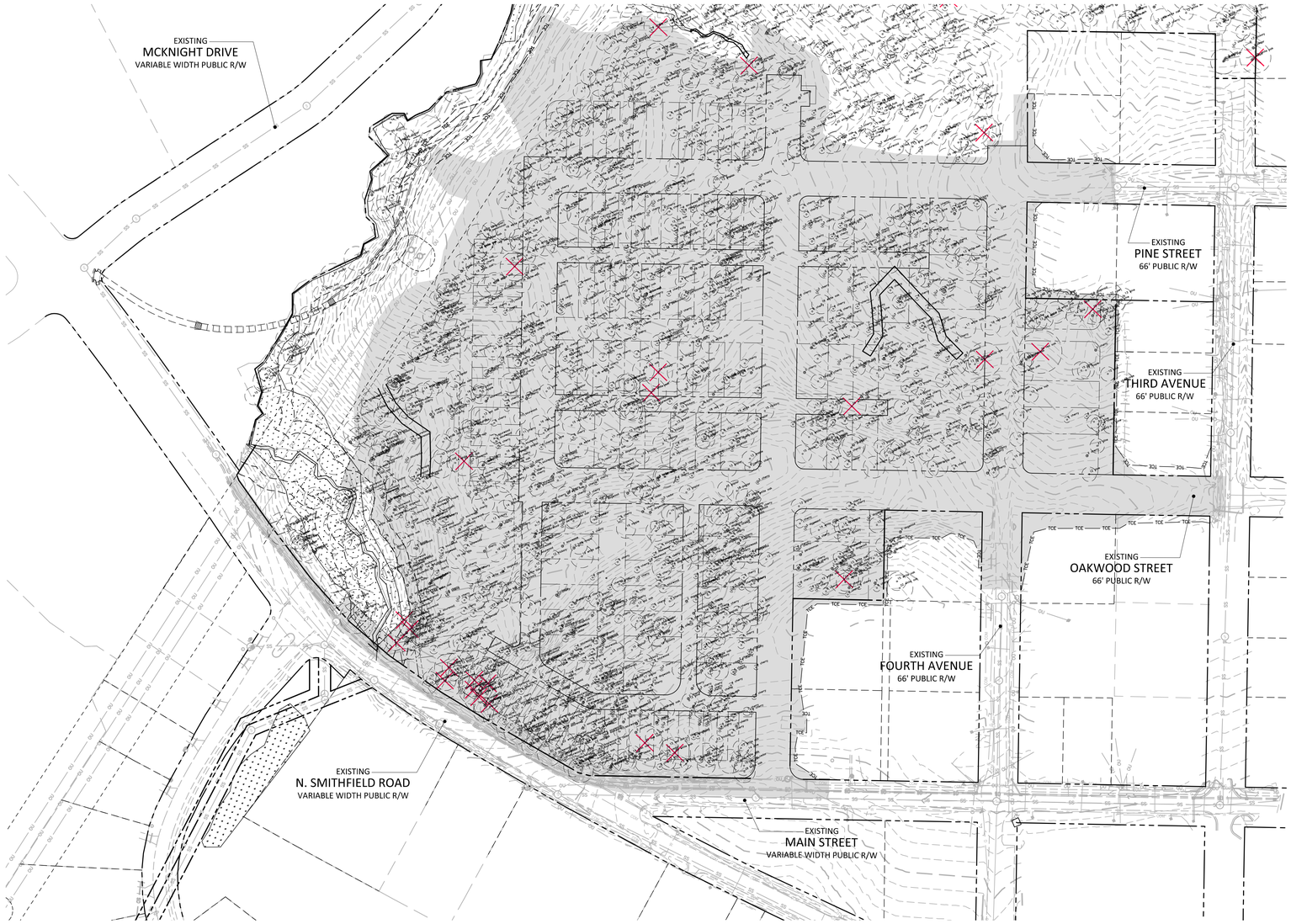

LEGEND

TREE REMOVAL AREA

TREE TO BE REPLACED

GRAPHIC SCALE

0 50 100 200

1 inch = 100 ft.

ALL CONSTRUCTION SHALL BE IN ACCORDANCE WITH THE CURRENT TOWN OF KNIGHTDALE, CITY OF RALEIGH PUBLIC UTILITIES, AND NCDOT (WHERE APPLICABLE) ENGINEERING DESIGN AND CONSTRUCTION STANDARDS

Town Certification. This design has been reviewed by the Engineer for the Town of Knightdale, and to the best of my knowledge and belief, it conforms to the requirements established in the Standard Specifications of the Town of Knightdale.
By: _____ Date: _____
Town Engineer
These plans are approved by the Town of Knightdale and serve as construction plans for this project.
By: _____ Date: _____
Administrator

FINAL DRAWING - RELEASED FOR CONSTRUCTION

MCADAMS

The John R. McAdams Company, Inc.
2905 Meridian Parkway
Durham, NC 27713

phone 919. 361. 5000
fax 919. 361. 2269
license number: C-0293, C-187

www.mcadamsco.com

CLIENT

ALLIANCE GROUP OF NC, LLC
7208 FALLS OF NEUSE RD, SUITE 101
RALEIGH, NORTH CAROLINA 27615
JACOB ANDERSON
PHONE: 919. 239. 9486

AGNC

DOWNTOWN NORTH AT KNIGHTDALE STATION
CONSTRUCTION DRAWINGS - PHASE 1
N SMITHFIELD ROAD
KNIGHTDALE, NORTH CAROLINA

NORTH CAROLINA PROFESSIONAL SEAL 051536 ENGINEER TYLER E. PROBST

REVISIONS

NO.	DATE	
1	----	----
2	----	----
3	----	----
4	----	----
5	----	----
6	----	----

PLAN INFORMATION

PROJECT NO.	AGN-21002
FILENAME	AGN21002-OTR1
CHECKED BY	JCM / TEP
DRAWN BY	MRC / LRS / RAD
SCALE	N.T.S.
DATE	02. 16. 2024

SHEET

OVERALL TREE REMOVAL PLAN

C1.02

M:\Projects\AGN\AGN21002\04-Production\Engineering\Current Drawings\Construction Drawings Sets\Phase-1\AGN21002-OTR1.dwg, 2/16/2024 1:48:32 PM, John Martin

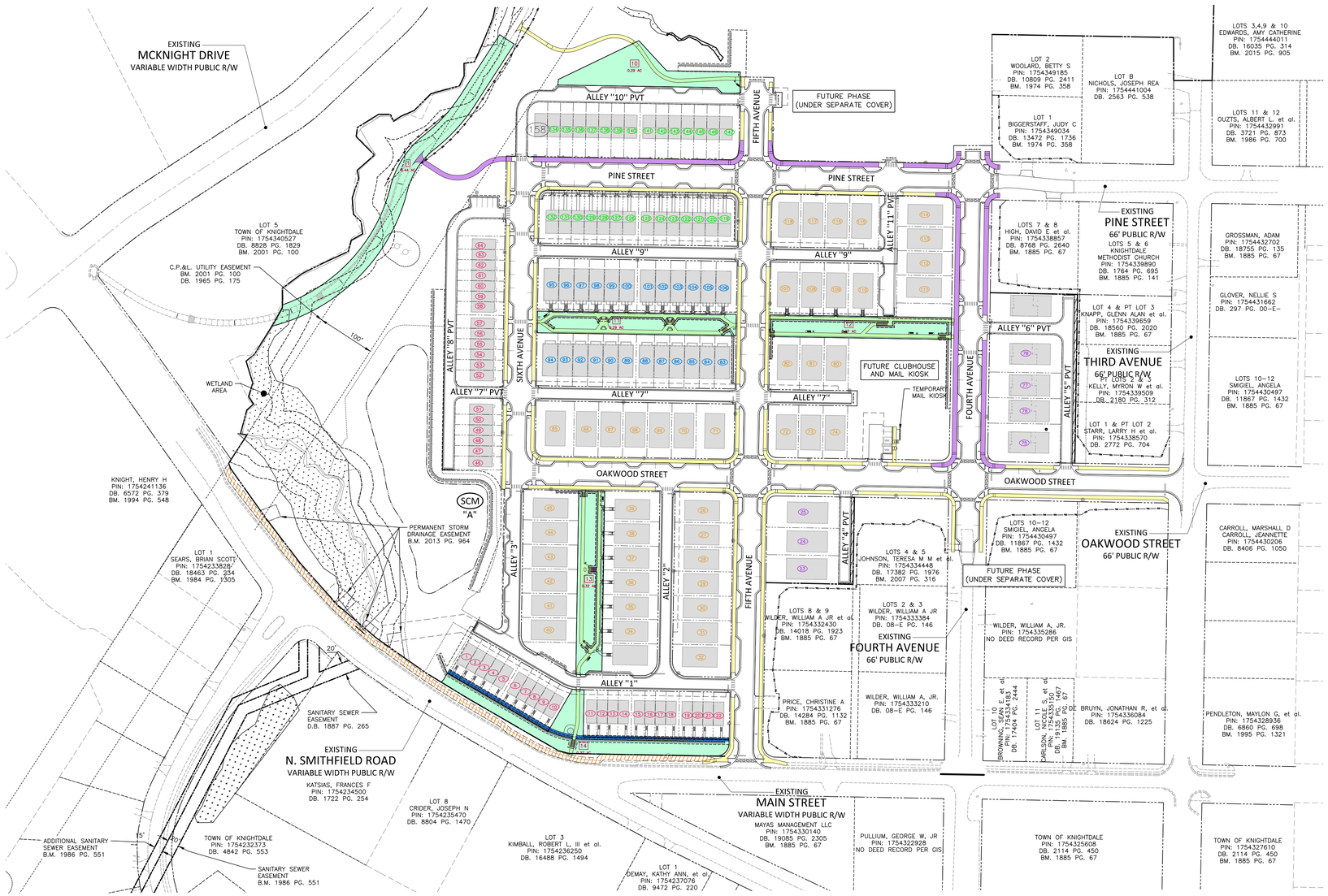

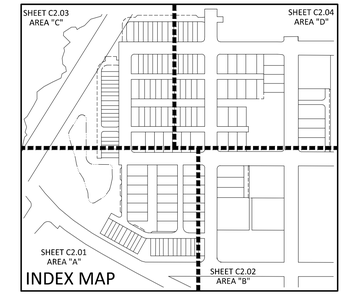

LEGEND

- 5' CONCRETE SIDEWALK
- 6' CONCRETE SIDEWALK
- 8' CONCRETE SIDEWALK
- 10' ASPHALT MULTI USE PATH TO BE INCLUDED WITH FUTURE OFFSITE ROADWAY IMPROVEMENT PLANS
- OPEN SPACE

OPEN SPACE PROGRAMMING				
PROGRAMMED SPACE	MINIMUM LAND AREA (SF)	MINIMUM FEATURE COUNT	COMMITTED FEATURES	AREA PROVIDED IN PHASE 1 (SF)
OPEN SPACE #1 / PGS #1	198,000	10	1,2,3,4,5,7,8,10,11,15,18,20	27,000
OPEN SPACE #2 / PGS #2	10,000	6	1,2,3,5,10,11	0
OPEN SPACE #3 / PGS #3	25,000	5	1,2,3,4,10	0
OPEN SPACE #4 / PGS #4	30,000	5	1,2,3,4,10	0
OPEN SPACE #5	33,500	9	1,2,3,5,10,11,15,16,19	0
OPEN SPACE #6	19,000	8	1,2,3,4,7,8,10,11	0
OPEN SPACE #7	7,000	4	1,3,4,8	0
OPEN SPACE #8	11,000	7	1,2,3,4,8,10,14,20	0
OPEN SPACE #9	15,000	7	1,2,3,4,8,10,14,20	0
OPEN SPACE #10	14,000	7	1,2,3,4,8,10,14,20	14,000
OPEN SPACE #11	13,000	7	1,2,3,4,8,10,14,20	13,000
OPEN SPACE #12	12,500	7	1,2,3,4,8,10,14,20	12,500
OPEN SPACE #13	14,000	7	1,2,3,4,8,10,14,20	14,000
OPEN SPACE #14	7,500	5	1,2,3,4,9	7,500
OPEN SPACE #15	10,000	N/A	---	0
OPEN SPACE #16	4,500	N/A	---	0
OPEN SPACE #17	10,000	N/A	---	0
OPEN SPACE #18	2,000	N/A	---	0
TOTAL:	436,000		TOTAL:	88,000
	10.00 AC			2.02 AC

LIST OF QUALIFYING FEATURES
1. DIRECT ACCESS TO PUBLIC SIDEWALK OR GREENWAY
2. PLACEMAKING / DIRECTIONAL SIGNAGE
3. INTERNAL PEDESTRIAN WALKWAY(S) AT LEAST 6' WIDE
4. NEW SHADE TREES (OR PRESERVATION OF EXISTING)
5. MOVABLE TABLES AND CHAIRS OR SEATING WALLS & BENCHES
6. AMPHITHEATER(S)
7. FIREPIT OR GRILLING STATIONS
8. ENHANCED LANDSCAPING OR GREEN INFRASTRUCTURE
9. SCULPTURE(S) OR OTHER PUBLIC ART FEATURES (MIN. 2 OVERALL)
10. WASTE RECEPTACLES (LANDFILL & MIXED RECYCLING)
11. BIKE PARKING
12. COMMUNITY GARDEN
13. PET PLAY AREA (WITH 4 FT ENCLOSURE & WASTE RECEPTACLES)
14. HARDSCAPE / LANDSCAPE SQUARE (DECK/PATIO PEDESTRIAN GATHERING SPACE)
15. COVERED PAVILLION (MIN. 3 OVERALL)
16. WATER PLAY AREA
17. PLAY AREA/PLAYGROUND WITH STRUCTURES, FIXTURES, OR EQUIPMENT
18. PLAY LAWN/PLAY FIELD/SPORT FIELD
19. POOL/POOL AMENITIES (MIN. 1 OVERALL)
20. PEDESTRIAN SCALE AND/OR CELEBRATORY LIGHTING
21. TRANSIT STOP WITH SHELTER
* OTHER FEATURES AS APPROVED BY THE ADMINISTRATOR

LOTS LEGEND - PHASE 1 (147)

- TOWNHOMES (LOT MIN = 18'x81') - 41
- TOWNHOMES (LOT MIN = 22'x91') - 29
- TOWNHOMES (LOT MIN = 26'x91') - 24
- SINGLE FAMILY (LOT MIN = 42'x91') - 45
- SINGLE FAMILY (LOT MIN = 44'x125') - 8

NOTES:

1. WHERE DRAINAGE STRUCTURES ARE SHOWN WITHIN A LABELED STREET OR ALLEY, THE RIGHT OF WAY OR ACCESS EASEMENT MAY ACT AS THE DRAINAGE EASEMENT.

LEGEND

SCM STORMWATER CONTROL MEASURE

GRAPHIC SCALE
0 50 100 200
1 inch = 100 ft.

SEE SHEET C0.01 FOR ALL PROJECT, SITE, GRADING, STORM DRAINAGE AND UTILITY NOTES

ALL CONSTRUCTION SHALL BE IN ACCORDANCE WITH THE CURRENT TOWN OF KNIGHTDALE, CITY OF RALEIGH PUBLIC UTILITIES, AND NCDOT (WHERE APPLICABLE) ENGINEERING DESIGN AND CONSTRUCTION STANDARDS

Town Certification. This design has been reviewed by the Engineer for the Town of Knightdale, and to the best of my knowledge and belief, it conforms to the requirements established in the Standard Specifications of the Town of Knightdale.
By: _____ Date: _____
Town Engineer
These plans are approved by the Town of Knightdale and serve as construction plans for this project.
By: _____ Date: _____
Administrator

FINAL DRAWING - RELEASED FOR CONSTRUCTION

MCADAMS
The John R. McAdams Company, Inc.
2905 Meridian Parkway
Durham, NC 27713

phone 919. 361. 5000
fax 919. 361. 2269
license number: C-0293, C-187

www.mcadamsco.com

CLIENT

ALLIANCE GROUP OF NC, LLC
7208 FALLS OF NEUSE RD, SUITE 101
RALEIGH, NORTH CAROLINA 27615
JACOB ANDERSON
PHONE: 919. 239. 9486

AGNC

DOWNTOWN NORTH AT KNIGHTDALE STATION
CONSTRUCTION DRAWINGS - PHASE 1
N SMITHFIELD ROAD
KNIGHTDALE, NORTH CAROLINA

NORTH CAROLINA PROFESSIONAL SEAL 051536 ENGINEER TYLER E. PROBST

REVISIONS

NO.	DATE	
1	----	----
2	----	----
3	----	----
4	----	----
5	----	----
6	----	----

PLAN INFORMATION

PROJECT NO.	AGN-21002
FILENAME	AGN21002-OAS1
CHECKED BY	JCM / TEP
DRAWN BY	MRC / LRS / RAD
SCALE	1" = 100'
DATE	02. 16. 2024

SHEET

OVERALL SITE PLAN

C2.00

M:\Projects\AGN\AGN21002\04-Production\Engineering\Current Drawings\Construction Drawings Set\Phase-1\AGN21002-OAS1.dwg, 2/19/2024 4:59:32 PM, Megan Clifford

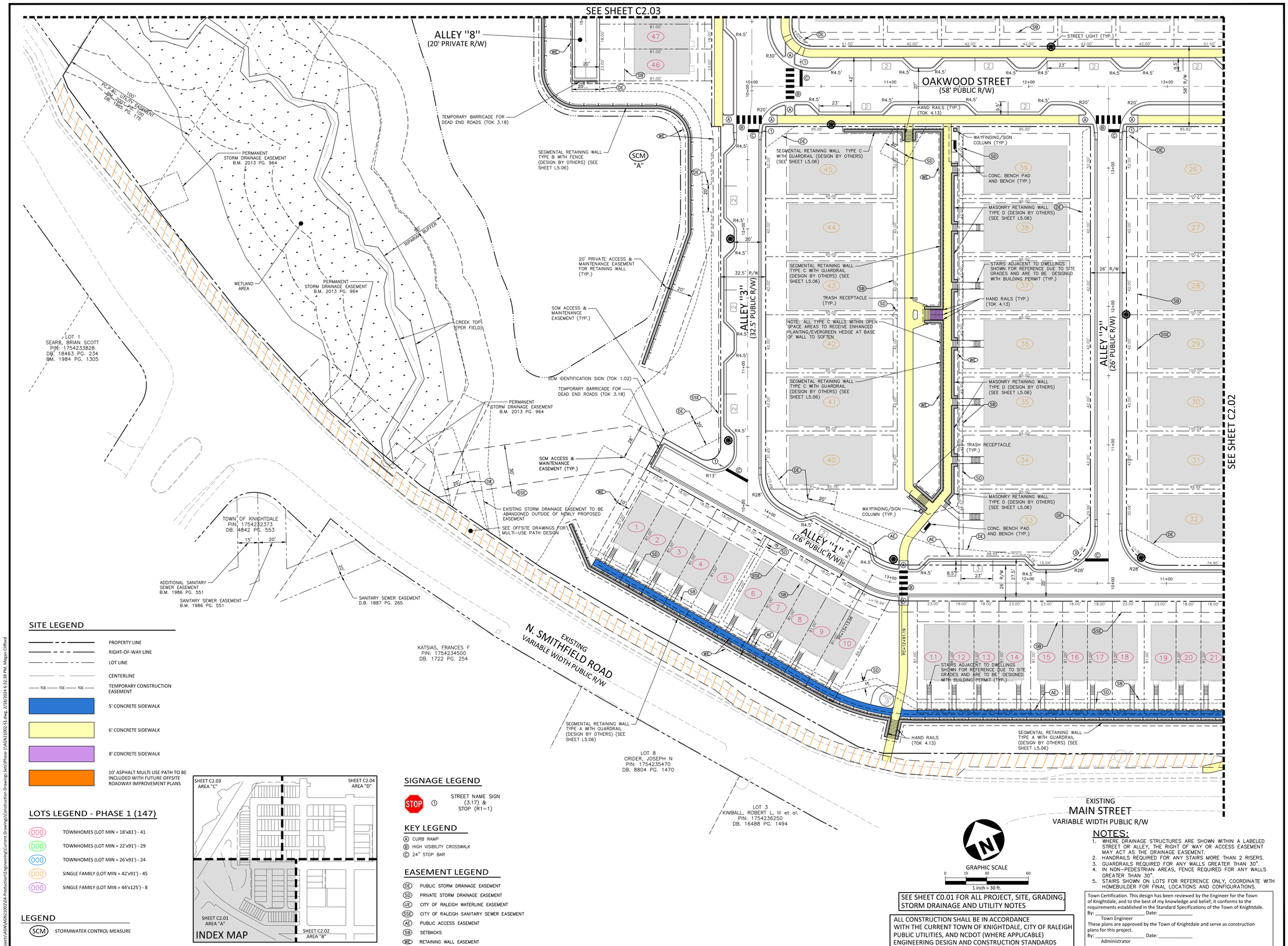

SITE LEGEND

- PROPERTY LINE
- RIGHT-OF-WAY LINE
- LOT LINE
- CENTERLINE
- TEMPORARY CONSTRUCTION EASEMENT
- 5' CONCRETE SIDEWALK
- 6' CONCRETE SIDEWALK
- 8' CONCRETE SIDEWALK
- 10' ASPHALT MULTI USE PATH TO BE INCLUDED WITH FUTURE OFFSITE ROADWAY IMPROVEMENT PLANS

LOTS LEGEND - PHASE 1 (147)

- TOWNHOMES (LOT MIN = 18'x81') - 41
- TOWNHOMES (LOT MIN = 22'x91') - 29
- TOWNHOMES (LOT MIN = 26'x91') - 24
- SINGLE FAMILY (LOT MIN = 42'x91') - 45
- SINGLE FAMILY (LOT MIN = 44'x125') - 8

LEGEND

SCM STORMWATER CONTROL MEASURE

SIGNAGE LEGEND

STOP (1) STREET NAME SIGN (3.17) & STOP (R1-1)

KEY LEGEND

- (A) CURB RAMP
- (B) HIGH VISIBILITY CROSSWALK
- (C) 24" STOP BAR

EASEMENT LEGEND

- (DE) PUBLIC STORM DRAINAGE EASEMENT
- (SD) PRIVATE STORM DRAINAGE EASEMENT
- (UE) CITY OF RALEIGH WATERLINE EASEMENT
- (SSE) CITY OF RALEIGH SANITARY SEWER EASEMENT
- (AE) PUBLIC ACCESS EASEMENT
- (SB) SETBACKS
- (WE) RETAINING WALL EASEMENT
- (TCE) TEMPORARY CONSTRUCTION EASEMENT

SEE SHEET C0.01 FOR ALL PROJECT, SITE, GRADING, STORM DRAINAGE AND UTILITY NOTES

ALL CONSTRUCTION SHALL BE IN ACCORDANCE WITH THE CURRENT TOWN OF KNIGHTDALE, CITY OF RALEIGH PUBLIC UTILITIES, AND NCDOT (WHERE APPLICABLE) ENGINEERING DESIGN AND CONSTRUCTION STANDARDS

NOTES:

1. WHERE DRAINAGE STRUCTURES ARE SHOWN WITHIN A LABELED STREET OR ALLEY, THE RIGHT OF WAY OR ACCESS EASEMENT MAY ACT AS THE DRAINAGE EASEMENT.
2. HANDRAILS REQUIRED FOR ANY STAIRS MORE THAN 2 RISERS.
3. GUARDRAILS REQUIRED FOR ANY WALLS GREATER THAN 30".
4. IN NON-PEDESTRIAN AREAS, FENCE REQUIRED FOR ANY WALLS GREATER THAN 30".
5. STAIRS SHOWN ON LOTS FOR REFERENCE ONLY, COORDINATE WITH HOMEBUILDER FOR FINAL LOCATIONS AND CONFIGURATIONS.

Town Certification. This design has been reviewed by the Engineer for the Town of Knightdale, and to the best of my knowledge and belief, it conforms to the requirements established in the Standard Specifications of the Town of Knightdale.
By: _____ Date: _____
Town Engineer
These plans are approved by the Town of Knightdale and serve as construction plans for this project.
By: _____ Date: _____
Administrator

FINAL DRAWING - RELEASED FOR CONSTRUCTION

MCADAMS
The John R. McAdams Company, Inc.
2905 Meridian Parkway
Durham, NC 27713

phone 919. 361. 5000
fax 919. 361. 2269
license number: C-0293, C-187

www.mcadamsco.com

CLIENT

ALLIANCE GROUP OF NC, LLC
7208 FALLS OF NEUSE RD, SUITE 101
RALEIGH, NORTH CAROLINA 27615
JACOB ANDERSON
PHONE: 919. 239. 9486

AGNC

DOWNTOWN NORTH AT KNIGHTDALE STATION
CONSTRUCTION DRAWINGS - PHASE 1
N SMITHFIELD ROAD
KNIGHTDALE, NORTH CAROLINA

NORTH CAROLINA PROFESSIONAL SEAL 051536 ENGINEER TYLER E. PROBST

REVISIONS

NO.	DATE	
1	----	----
2	----	----
3	----	----
4	----	----
5	----	----
6	----	----

PLAN INFORMATION

PROJECT NO.	AGN-21002
FILENAME	AGN21002-S1
CHECKED BY	JCM / TEP
DRAWN BY	MRC / LRS / RAD
SCALE	1" = 30'
DATE	02. 16. 2024

SHEET

SITE PLAN - AREA "A"

C2.01

M:\Projects\AGN\AGN21002\04-Production\Engineering\Current Drawings\Construction Drawings Sets\Phase-1\AGN21002-S1.dwg, 7/18/2024 6:32:38 PM, Megan Clifford

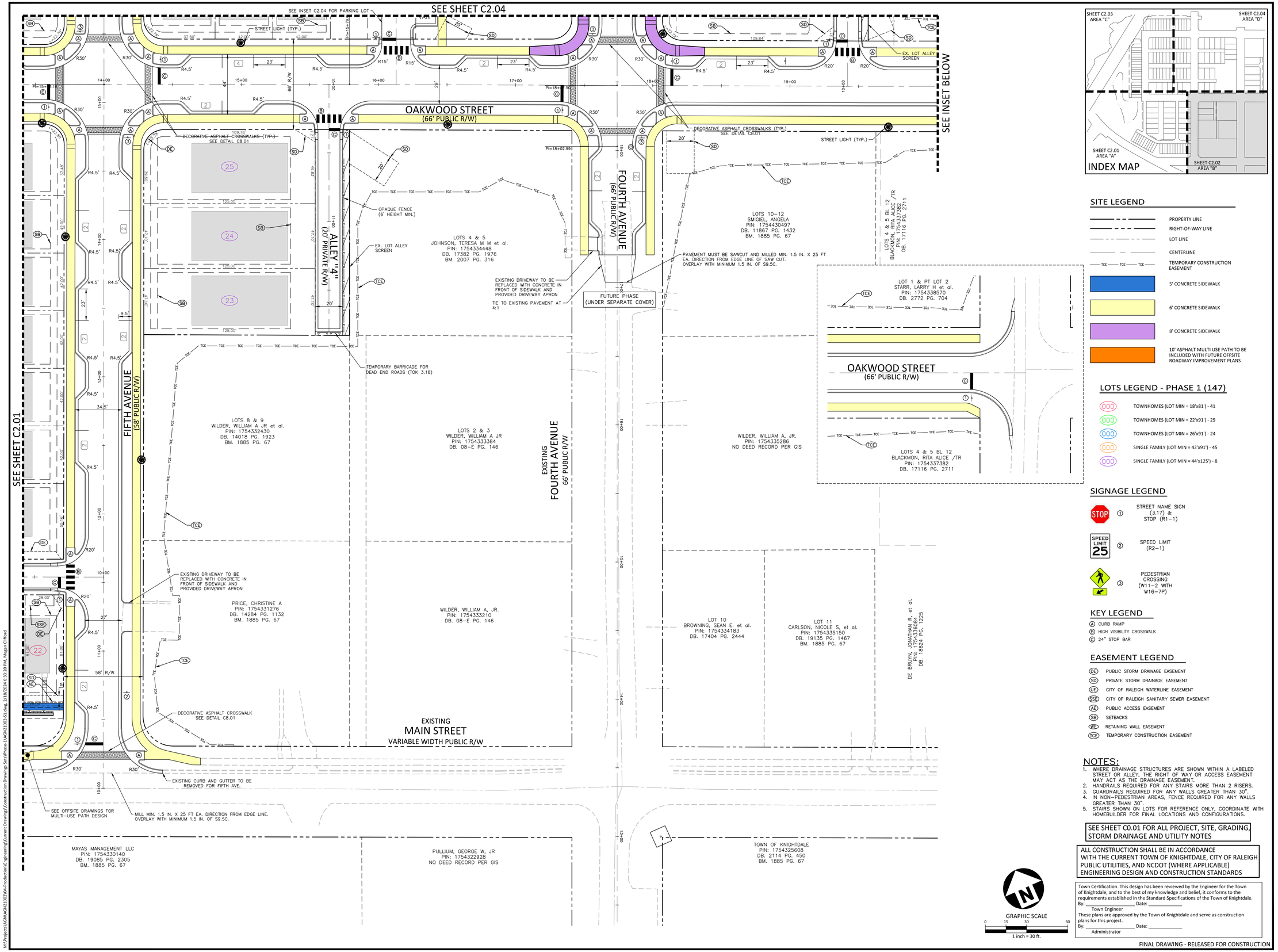

SITE LEGEND

- PROPERTY LINE
- RIGHT-OF-WAY LINE
- LOT LINE
- CENTERLINE
- TEMPORARY CONSTRUCTION EASEMENT
- 5' CONCRETE SIDEWALK
- 6' CONCRETE SIDEWALK
- 8' CONCRETE SIDEWALK
- 10' ASPHALT MULTI USE PATH TO BE INCLUDED WITH FUTURE OFFSITE ROADWAY IMPROVEMENT PLANS

LOTS LEGEND - PHASE 1 (147)

- TOWNHOMES (LOT MIN = 18'x81') - 41
- TOWNHOMES (LOT MIN = 22'x91') - 29
- TOWNHOMES (LOT MIN = 26'x91') - 24
- SINGLE FAMILY (LOT MIN = 42'x91') - 45
- SINGLE FAMILY (LOT MIN = 44'x125') - 8

SIGNAGE LEGEND

1. STREET NAME SIGN (3.17) & STOP (R1-1)
2. SPEED LIMIT (R2-1)
3. PEDESTRIAN CROSSING (W11-2 WITH W16-7P)

KEY LEGEND

- (A) CURB RAMP
- (B) HIGH VISIBILITY CROSSWALK
- (C) 24" STOP BAR

EASEMENT LEGEND

- (DE) PUBLIC STORM DRAINAGE EASEMENT
- (SD) PRIVATE STORM DRAINAGE EASEMENT
- (UE) CITY OF RALEIGH WATERLINE EASEMENT
- (SSE) CITY OF RALEIGH SANITARY SEWER EASEMENT
- (AE) PUBLIC ACCESS EASEMENT
- (SB) SETBACKS
- (RE) RETAINING WALL EASEMENT
- (TCE) TEMPORARY CONSTRUCTION EASEMENT

NOTES:

1. WHERE DRAINAGE STRUCTURES ARE SHOWN WITHIN A LABELED STREET OR ALLEY, THE RIGHT OF WAY OR ACCESS EASEMENT MAY ACT AS THE DRAINAGE EASEMENT.
2. HANDRAILS REQUIRED FOR ANY STAIRS MORE THAN 2 RISERS.
3. GUARDRAILS REQUIRED FOR ANY WALLS GREATER THAN 30".
4. IN NON-PEDESTRIAN AREAS, FENCE REQUIRED FOR ANY WALLS GREATER THAN 30".
5. STAIRS SHOWN ON LOTS FOR REFERENCE ONLY, COORDINATE WITH HOMEBUILDER FOR FINAL LOCATIONS AND CONFIGURATIONS.

SEE SHEET C0.01 FOR ALL PROJECT, SITE, GRADING, STORM DRAINAGE AND UTILITY NOTES

ALL CONSTRUCTION SHALL BE IN ACCORDANCE WITH THE CURRENT TOWN OF KNIGHTDALE, CITY OF RALEIGH PUBLIC UTILITIES, AND NCDOT (WHERE APPLICABLE) ENGINEERING DESIGN AND CONSTRUCTION STANDARDS

Town Certification. This design has been reviewed by the Engineer for the Town of Knightdale, and to the best of my knowledge and belief, it conforms to the requirements established in the Standard Specifications of the Town of Knightdale.
By: _____ Date: _____
Town Engineer
These plans are approved by the Town of Knightdale and serve as construction plans for this project.
By: _____ Date: _____
Administrator

FINAL DRAWING - RELEASED FOR CONSTRUCTION

MCADAMS
The John R. McAdams Company, Inc.
2905 Meridian Parkway
Durham, NC 27713

phone 919. 361. 5000
fax 919. 361. 2269
license number: C-0293, C-187

www.mcadamsco.com

CLIENT

ALLIANCE GROUP OF NC, LLC
7208 FALLS OF NEUSE RD, SUITE 101
RALEIGH, NORTH CAROLINA 27615
JACOB ANDERSON
PHONE: 919. 239. 9486

AGNC

DOWNTOWN NORTH AT KNIGHTDALE STATION
CONSTRUCTION DRAWINGS - PHASE 1
N SMITHFIELD ROAD
KNIGHTDALE, NORTH CAROLINA

NORTH CAROLINA PROFESSIONAL SEAL 051536 ENGINEER TYLER E. PROBST

REVISIONS

NO.	DATE	
1	----	----
2	----	----
3	----	----
4	----	----
5	----	----
6	----	----

PLAN INFORMATION

PROJECT NO.	AGN-21002
FILENAME	AGN21002-S1
CHECKED BY	JCM / TEP
DRAWN BY	MRC / LRS / RAD
SCALE	1" = 30'
DATE	02. 16. 2024

SHEET

SITE PLAN - AREA "B"

C2.02

M:\Projects\AGN\AGN21002\04-Production\Engineering\Current Drawings\Construction Drawings Sets\Phase-1\AGN21002-S1.dwg, 2/18/2024 6:33:20 PM, Megan Clifford

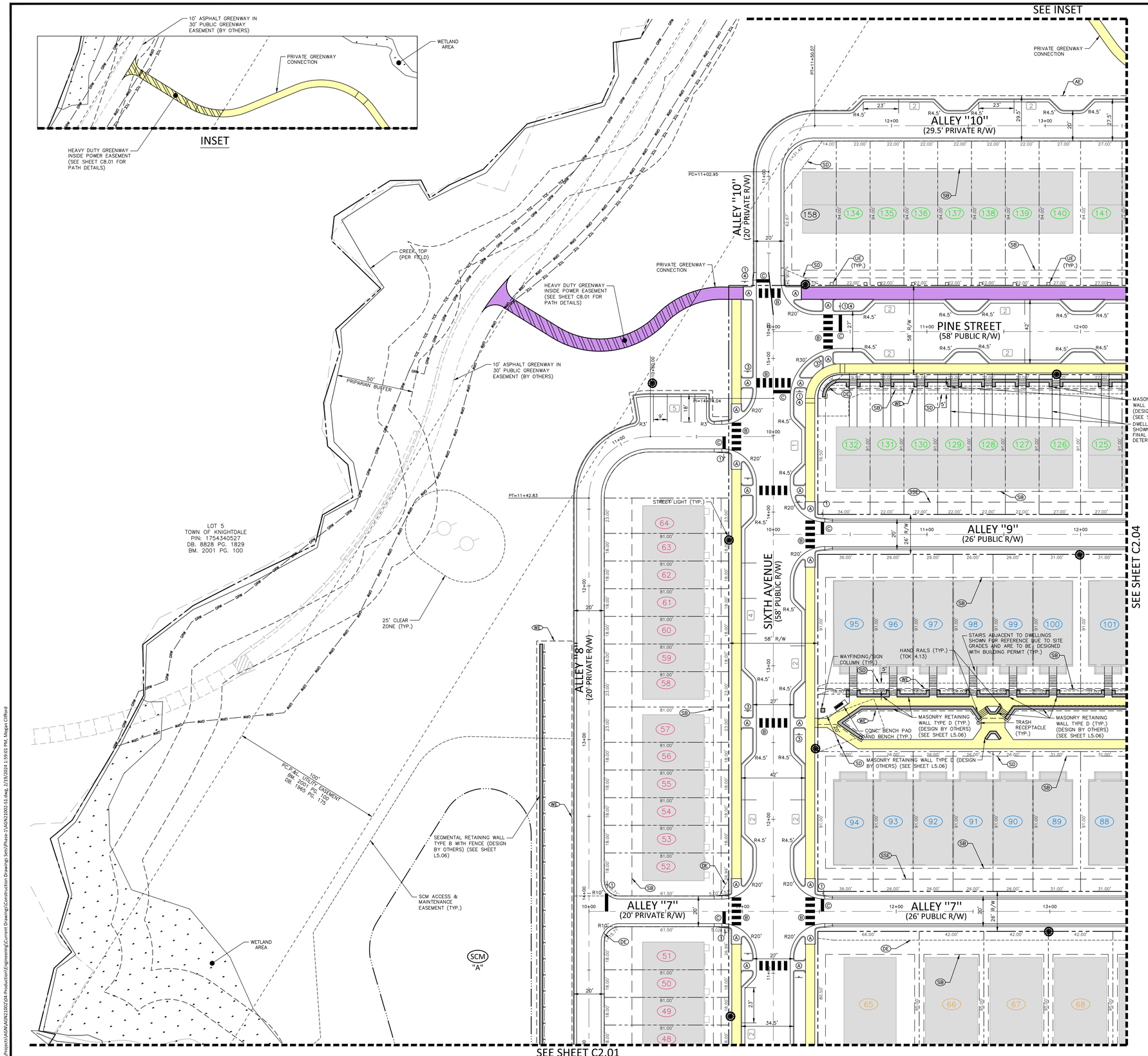

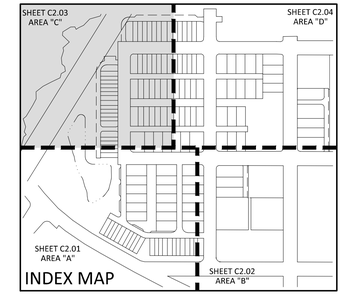

SITE LEGEND

- PROPERTY LINE
- RIGHT-OF-WAY LINE
- LOT LINE
- CENTERLINE
- TEMPORARY CONSTRUCTION EASEMENT
- 5' CONCRETE SIDEWALK
- 6' CONCRETE SIDEWALK
- 8' CONCRETE SIDEWALK
- 10' ASPHALT MULTI USE PATH TO BE INCLUDED WITH FUTURE OFFSITE ROADWAY IMPROVEMENT PLANS

LOTS LEGEND - PHASE 1 (147)

- TOWNHOMES (LOT MIN = 18'x81') - 41
- TOWNHOMES (LOT MIN = 22'x91') - 29
- TOWNHOMES (LOT MIN = 26'x91') - 24
- SINGLE FAMILY (LOT MIN = 42'x91') - 45
- SINGLE FAMILY (LOT MIN = 44'x125') - 8

SIGNAGE LEGEND

1. STREET NAME SIGN (3.17) & STOP (R1-1)
2. SPEED LIMIT (R2-1)
3. PEDESTRIAN CROSSING (W11-2 WITH W16-7P)
4. ALL WAY (R1-3P)

KEY LEGEND

- (A) CURB RAMP
- (B) HIGH VISIBILITY CROSSWALK
- (C) 24" STOP BAR

EASEMENT LEGEND

- (DE) PUBLIC STORM DRAINAGE EASEMENT
- (SD) PRIVATE STORM DRAINAGE EASEMENT
- (UE) CITY OF RALEIGH WATERLINE EASEMENT
- (SSE) CITY OF RALEIGH SANITARY SEWER EASEMENT
- (AE) PUBLIC ACCESS EASEMENT
- (SB) SETBACKS
- (WE) RETAINING WALL EASEMENT
- (TCE) TEMPORARY CONSTRUCTION EASEMENT

LEGEND

- (SCM) STORMWATER CONTROL MEASURE

GRAPHIC SCALE
0 15 30 60
1 inch = 30 ft.

NOTES:

1. WHERE DRAINAGE STRUCTURES ARE SHOWN WITHIN A LABELED STREET OR ALLEY, THE RIGHT OF WAY OR ACCESS EASEMENT MAY ACT AS THE DRAINAGE EASEMENT.
2. HANDRAILS REQUIRED FOR ANY STAIRS MORE THAN 2 RISERS.
3. GUARDRAILS REQUIRED FOR ANY WALLS GREATER THAN 30".
4. IN NON-PEDESTRIAN AREAS, FENCE REQUIRED FOR ANY WALLS GREATER THAN 30".
5. STAIRS SHOWN ON LOTS FOR REFERENCE ONLY, COORDINATE WITH HOMEBUILDER FOR FINAL LOCATIONS AND CONFIGURATIONS.

SEE SHEET C0.01 FOR ALL PROJECT, SITE, GRADING, STORM DRAINAGE AND UTILITY NOTES

ALL CONSTRUCTION SHALL BE IN ACCORDANCE WITH THE CURRENT TOWN OF KNIGHTDALE, CITY OF RALEIGH PUBLIC UTILITIES, AND NCDOT (WHERE APPLICABLE) ENGINEERING DESIGN AND CONSTRUCTION STANDARDS

Town Certification. This design has been reviewed by the Engineer for the Town of Knightdale, and to the best of my knowledge and belief, it conforms to the requirements established in the Standard Specifications of the Town of Knightdale.
By: _____ Date: _____
Town Engineer
These plans are approved by the Town of Knightdale and serve as construction plans for this project.
By: _____ Date: _____
Administrator

FINAL DRAWING - RELEASED FOR CONSTRUCTION

MCADAMS
The John R. McAdams Company, Inc.
2905 Meridian Parkway
Durham, NC 27713

phone 919. 361. 5000
fax 919. 361. 2269
license number: C-0293, C-187

www.mcadamsco.com

CLIENT

ALLIANCE GROUP OF NC, LLC
7208 FALLS OF NEUSE RD, SUITE 101
RALEIGH, NORTH CAROLINA 27615
JACOB ANDERSON
PHONE: 919. 239. 9486

AGNC

DOWNTOWN NORTH AT KNIGHTDALE STATION
CONSTRUCTION DRAWINGS - PHASE 1
N SMITHFIELD ROAD
KNIGHTDALE, NORTH CAROLINA

NORTH CAROLINA PROFESSIONAL SEAL 051536 ENGINEER TYLER E. PROEST

REVISIONS

NO.	DATE	
1	----	----
2	----	----
3	----	----
4	----	----
5	----	----
6	----	----

PLAN INFORMATION

PROJECT NO.	AGN-21002
FILENAME	AGN21002-S1
CHECKED BY	JCM / TEP
DRAWN BY	MRC / LRS / RAD
SCALE	1" = 30'
DATE	02. 16. 2024

SHEET

SITE PLAN - AREA "C"

C2.03

M:\Projects\AGN\AGN21002\04-Production\Engineering\Current Drawings\Construction Drawings Sets\Phase-1\AGN21002-S1.dwg, 2/19/2024 1:59:01 PM, Megan Clifford

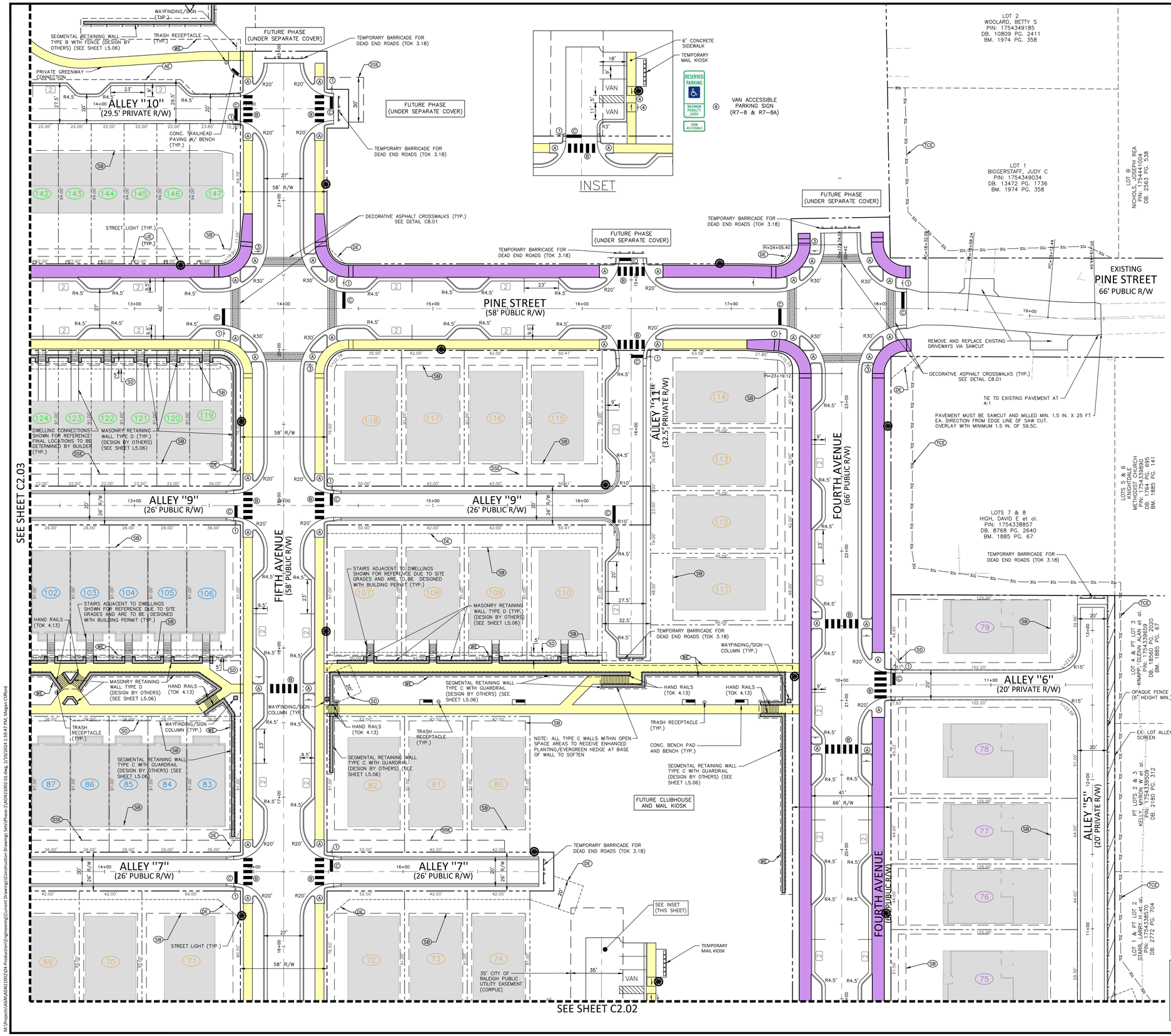

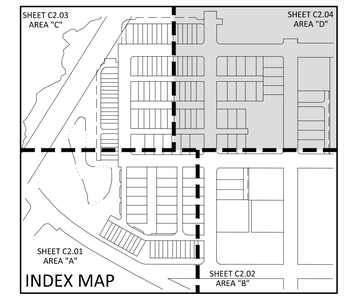

SITE LEGEND

- PROPERTY LINE
- RIGHT-OF-WAY LINE
- LOT LINE
- CENTERLINE
- TEMPORARY CONSTRUCTION EASEMENT
- 5' CONCRETE SIDEWALK
- 6' CONCRETE SIDEWALK
- 8' CONCRETE SIDEWALK
- 10' ASPHALT MULTI USE PATH TO BE INCLUDED WITH FUTURE OFFSITE ROADWAY IMPROVEMENT PLANS

LOTS LEGEND - PHASE 1 (147)

- TOWNHOMES (LOT MIN = 18'x81') - 41
- TOWNHOMES (LOT MIN = 22'x91') - 29
- TOWNHOMES (LOT MIN = 26'x91') - 24
- SINGLE FAMILY (LOT MIN = 42'x91') - 45
- SINGLE FAMILY (LOT MIN = 44'x125') - 8

SIGNAGE LEGEND

1. STREET NAME SIGN (3.17) & STOP (R1-1)
2. SPEED LIMIT (R2-1)
3. PEDESTRIAN CROSSING (W11-2 WITH W16-7P)

KEY LEGEND

- (A) CURB RAMP
- (B) HIGH VISIBILITY CROSSWALK
- (C) 24" STOP BAR

EASEMENT LEGEND

- (DE) PUBLIC STORM DRAINAGE EASEMENT
- (SD) PRIVATE STORM DRAINAGE EASEMENT
- (UE) CITY OF RALEIGH WATERLINE EASEMENT
- (SSE) CITY OF RALEIGH SANITARY SEWER EASEMENT
- (AE) PUBLIC ACCESS EASEMENT
- (SB) SETBACKS
- (WE) RETAINING WALL EASEMENT
- (TCE) TEMPORARY CONSTRUCTION EASEMENT

GRAPHIC SCALE
0 15 30 60
1 inch = 30 ft.

NOTES:

1. WHERE DRAINAGE STRUCTURES ARE SHOWN WITHIN A LABELED STREET OR ALLEY, THE RIGHT OF WAY OR ACCESS EASEMENT MAY ACT AS THE DRAINAGE EASEMENT.
2. HANDRAILS REQUIRED FOR ANY STAIRS MORE THAN 2 RISERS.
3. GUARDRAILS REQUIRED FOR ANY WALLS GREATER THAN 30".
4. IN NON-PEDESTRIAN AREAS, FENCE REQUIRED FOR ANY WALLS GREATER THAN 30".
5. STAIRS SHOWN ON LOTS FOR REFERENCE ONLY, COORDINATE WITH HOMEBUILDER FOR FINAL LOCATIONS AND CONFIGURATIONS.

SEE SHEET C0.01 FOR ALL PROJECT, SITE, GRADING, STORM DRAINAGE AND UTILITY NOTES

ALL CONSTRUCTION SHALL BE IN ACCORDANCE WITH THE CURRENT TOWN OF KNIGHTDALE, CITY OF RALEIGH PUBLIC UTILITIES, AND NCDOT (WHERE APPLICABLE) ENGINEERING DESIGN AND CONSTRUCTION STANDARDS

Town Certification. This design has been reviewed by the Engineer for the Town of Knightdale, and to the best of my knowledge and belief, it conforms to the requirements established in the Standard Specifications of the Town of Knightdale.
By: _____ Date: _____
Town Engineer
These plans are approved by the Town of Knightdale and serve as construction plans for this project.
By: _____ Date: _____
Administrator

FINAL DRAWING - RELEASED FOR CONSTRUCTION

MCADAMS
The John R. McAdams Company, Inc.
2905 Meridian Parkway
Durham, NC 27713

phone 919. 361. 5000
fax 919. 361. 2269
license number: C-0293, C-187

www.mcadamsco.com

CLIENT

ALLIANCE GROUP OF NC, LLC
7208 FALLS OF NEUSE RD, SUITE 101
RALEIGH, NORTH CAROLINA 27615
JACOB ANDERSON
PHONE: 919. 239. 9486

AGNC

DOWNTOWN NORTH AT KNIGHTDALE STATION
CONSTRUCTION DRAWINGS - PHASE 1
N SMITHFIELD ROAD
KNIGHTDALE, NORTH CAROLINA

NORTH CAROLINA PROFESSIONAL SEAL 051536 ENGINEER TYLER E. PROBST

REVISIONS

NO.	DATE		
1	----	----	
2	----	----	
3	----	----	
4	----	----	
5	----	----	
6	----	----	

PLAN INFORMATION

PROJECT NO.	AGN-21002
FILENAME	AGN21002-S1
CHECKED BY	JCM / TEP
DRAWN BY	MRC / LRS / RAD
SCALE	1" = 30'
DATE	02. 16. 2024

SHEET

SITE PLAN - AREA "D"

C2.04

M:\Projects\AGN\AGN21002\04-Production\Engineering\Current Drawings\Construction Drawings Set\Phase-1\AGN21002-S1.dwg, 2/19/2024 1:59:47 PM, Megan Clifford

SITE LEGEND

- PROPERTY LINE
- RIGHT-OF-WAY LINE
- LOT LINE
- CENTERLINE

SIGNAGE LEGEND

1. STOP (R1-1)
2. SPEED LIMIT (R2-1)
3. PEDESTRIAN CROSSING (W11-2 WITH W16-7P)
4. ALL WAY (R1-3P)

KEY LEGEND

- (A) CURB RAMP
- (B) HIGH VISIBILITY CROSSWALK
- (C) 23" STOP BAR

GRAPHIC SCALE
0 30 60 120
1 inch = 60 ft.

SEE SHEET C0.01 FOR ALL PROJECT, SITE, GRADING, STORM DRAINAGE AND UTILITY NOTES

ALL CONSTRUCTION SHALL BE IN ACCORDANCE WITH THE CURRENT TOWN OF KNIGHTDALE, CITY OF RALEIGH PUBLIC UTILITIES, AND NCDOT (WHERE APPLICABLE) ENGINEERING DESIGN AND CONSTRUCTION STANDARDS

Town Certification. This design has been reviewed by the Engineer for the Town of Knightdale, and to the best of my knowledge and belief, it conforms to the requirements established in the Standard Specifications of the Town of Knightdale.
By: _____ Date: _____
Town Engineer
These plans are approved by the Town of Knightdale and serve as construction plans for this project.
By: _____ Date: _____
Administrator

FINAL DRAWING - RELEASED FOR CONSTRUCTION

MCADAMS
The John R. McAdams Company, Inc.
2905 Meridian Parkway
Durham, NC 27713

phone 919. 361. 5000
fax 919. 361. 2269
license number: C-0293, C-187

www.mcadamsco.com

CLIENT

ALLIANCE GROUP OF NC, LLC
7208 FALLS OF NEUSE RD, SUITE 101
RALEIGH, NORTH CAROLINA 27615
JACOB ANDERSON
PHONE: 919. 239. 9486

AGNC

DOWNTOWN NORTH AT KNIGHTDALE STATION
CONSTRUCTION DRAWINGS
N SMITHFIELD ROAD
KNIGHTDALE, NORTH CAROLINA

NORTH CAROLINA PROFESSIONAL SEAL 051536 ENGINEER TYLER E. PROSST

REVISIONS

NO.	DATE	
1	----	----
2	----	----
2	----	----
3	----	----
5	----	----
6	----	----

PLAN INFORMATION

PROJECT NO.	AGN-21002
FILENAME	AGN21002-PM1
CHECKED BY	JCM / TEP
DRAWN BY	LRS / RAD
SCALE	1" = 60'
DATE	02. 16. 2024

SHEET

PAVEMENT MARKINGS & SIGNAGE PLAN

C2.10

M:\Projects\AGN\AGN21002\04-Production\Engineering\Current Drawings\Construction Drawings Sets\Phase-1\AGN21002-PM1.dwg, 2/19/2024 1:54:58 PM, Megan Clifford

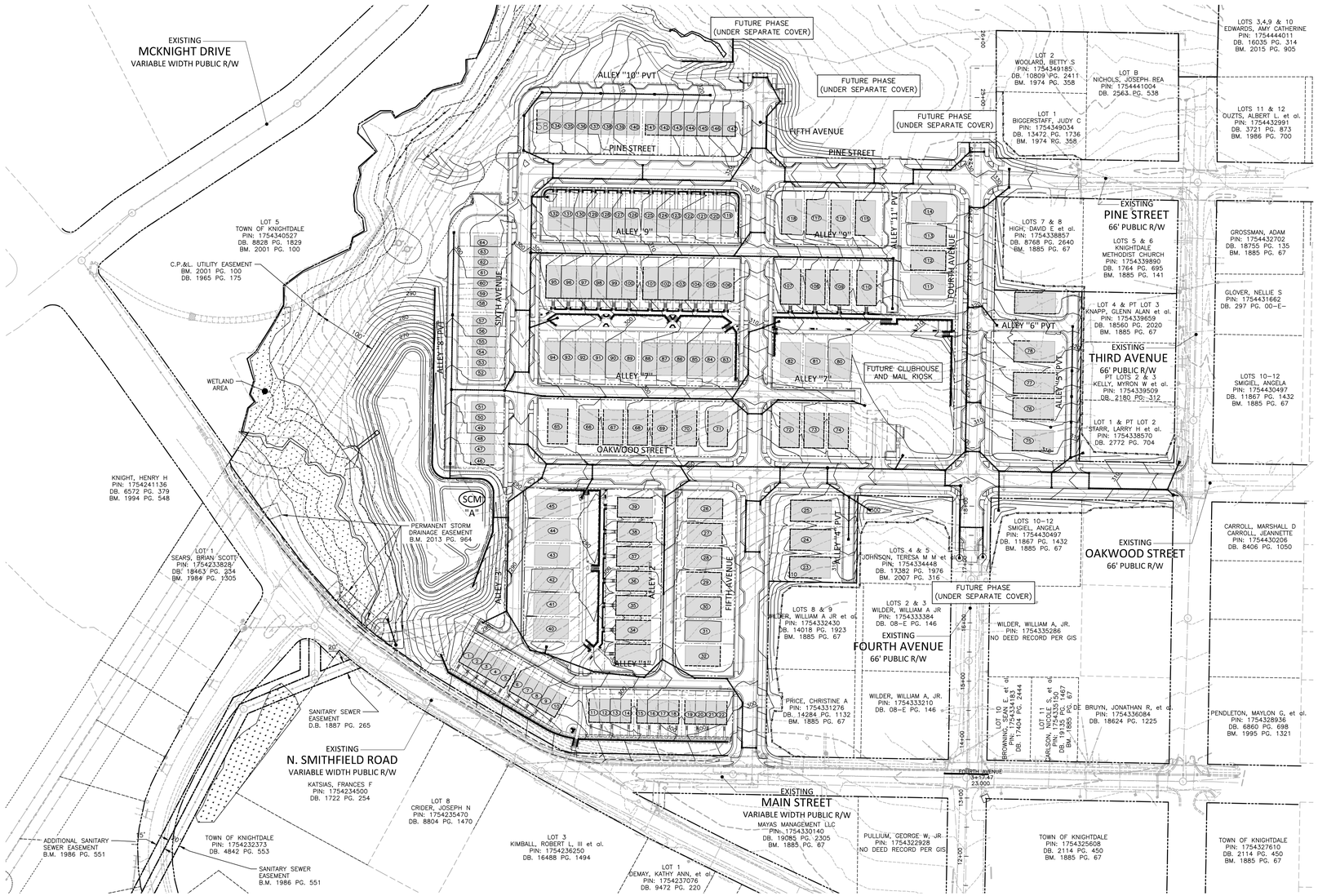

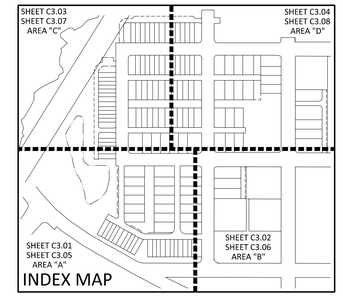

GRAPHIC SCALE
0 50 100 200
1 inch = 100 ft.

NOTES:

1. WHERE DRAINAGE STRUCTURES ARE SHOWN WITHIN A LABELED STREET OR ALLEY, THE RIGHT OF WAY OR ACCESS EASEMENT MAY ACT AS THE DRAINAGE EASEMENT.

SEE SHEET C0.01 FOR ALL PROJECT, SITE, GRADING, STORM DRAINAGE AND UTILITY NOTES

ALL CONSTRUCTION SHALL BE IN ACCORDANCE WITH THE CURRENT TOWN OF KNIGHTDALE, CITY OF RALEIGH PUBLIC UTILITIES, AND NCDOT (WHERE APPLICABLE) ENGINEERING DESIGN AND CONSTRUCTION STANDARDS

Town Certification. This design has been reviewed by the Engineer for the Town of Knightdale, and to the best of my knowledge and belief, it conforms to the requirements established in the Standard Specifications of the Town of Knightdale.
By: _____ Date: _____
Town Engineer
These plans are approved by the Town of Knightdale and serve as construction plans for this project.
By: _____ Date: _____
Administrator

LEGEND

SCM STORMWATER CONTROL MEASURE

FINAL DRAWING - RELEASED FOR CONSTRUCTION

MCADAMS
The John R. McAdams Company, Inc.
2905 Meridian Parkway
Durham, NC 27713

phone 919. 361. 5000
fax 919. 361. 2269
license number: C-0293, C-187

www.mcadamsco.com

CLIENT

ALLIANCE GROUP OF NC, LLC
7208 FALLS OF NEUSE RD, SUITE 101
RALEIGH, NORTH CAROLINA 27615
JACOB ANDERSON
PHONE: 919. 239. 9486

AGNC

DOWNTOWN NORTH AT KNIGHTDALE STATION
CONSTRUCTION DRAWINGS - PHASE 1
N SMITHFIELD ROAD
KNIGHTDALE, NORTH CAROLINA

NORTH CAROLINA PROFESSIONAL SEAL 051536 ENGINEER TYLER E. PROBST

REVISIONS

NO.	DATE	
1	----	----
2	----	----
3	----	----
4	----	----
5	----	----
6	----	----

PLAN INFORMATION

PROJECT NO.	AGN-21002
FILENAME	AGN21002-OAG1
CHECKED BY	JCM / TEP
DRAWN BY	MRC / LRS / RAD
SCALE	1" = 100'
DATE	02. 16. 2024

SHEET

OVERALL GRADING AND STORM DRAINAGE PLAN

C3.00

M:\Projects\AGN\AGN21002\04-Production\Engineering\Current Drawings\Construction Drawings Sets\Phase-1\AGN21002-OAG1.dwg, 2/19/2024 5:38:28 PM, Tyler Probst

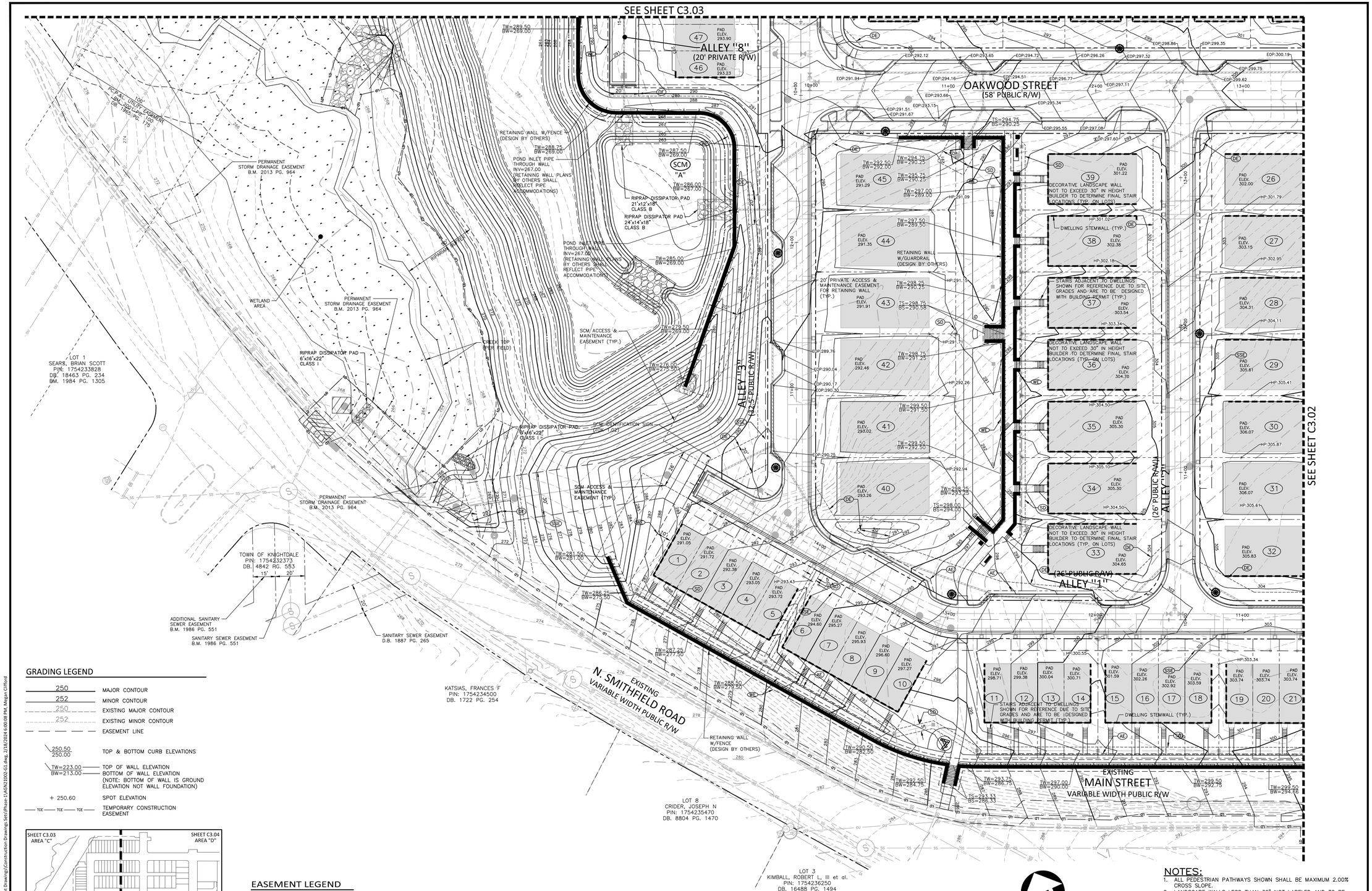

GRADING LEGEND

250	MAJOR CONTOUR
252	MINOR CONTOUR
250	EXISTING MAJOR CONTOUR
252	EXISTING MINOR CONTOUR
	EASEMENT LINE
250.50 / 250.00	TOP & BOTTOM CURB ELEVATIONS
TW=223.00 / BW=213.00	TOP OF WALL ELEVATION / BOTTOM OF WALL ELEVATION (NOTE: BOTTOM OF WALL IS GROUND ELEVATION NOT WALL FOUNDATION)
+ 250.60	SPOT ELEVATION
TCE	TEMPORARY CONSTRUCTION EASEMENT

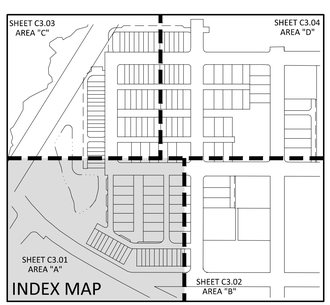

EASEMENT LEGEND

- (DE) PUBLIC STORM DRAINAGE EASEMENT
- (SD) PRIVATE STORM DRAINAGE EASEMENT
- (UE) CITY OF RALEIGH WATERLINE EASEMENT
- (SSE) CITY OF RALEIGH SANITARY SEWER EASEMENT
- (AE) PUBLIC ACCESS EASEMENT
- (SB) SETBACKS
- RETAINING WALL EASEMENT
- (TCE) TEMPORARY CONSTRUCTION EASEMENT

LEGEND

- (SCM) STORMWATER CONTROL MEASURE

GRAPHIC SCALE
0 15 30 60
1 inch = 30 ft.

SEE SHEET C0.01 FOR ALL PROJECT, SITE, GRADING, STORM DRAINAGE AND UTILITY NOTES

ALL CONSTRUCTION SHALL BE IN ACCORDANCE WITH THE CURRENT TOWN OF KNIGHTDALE, CITY OF RALEIGH PUBLIC UTILITIES, AND NCDOT (WHERE APPLICABLE) ENGINEERING DESIGN AND CONSTRUCTION STANDARDS

NOTES:

1. ALL PEDESTRIAN PATHWAYS SHOWN SHALL BE MAXIMUM 2.00% CROSS SLOPE.
2. LANDSCAPE WALLS LESS THAN 30" NOT LABELED AND TO BE DESIGN BUILD BY CONTRACTOR/BUILDER. FINAL STAIR LOCATIONS TO BE DETERMINED BY BUILDER BASED ON DWELLING PRODUCT.
3. STEM WALLS SHOWN ON PLANS FOR REFERENCE, MAX. 48".
4. PAD ELEVATIONS DENOTE FINISHED GRADE OF EARTHEN PAD AND GARAGE FINISHED FLOOR ELEVATION.
5. REFER TO SITE PLANS FOR NOTES ON FENCE/GUARDRAIL.
6. CONTRACTOR/OWNER MAY PLACE ADDITIONAL ROOF LEADER PIPING TO CONNECT TO PROVIDED STORM SYSTEM AT MIN. 1.00%.

Town Certification. This design has been reviewed by the Engineer for the Town of Knightdale, and to the best of my knowledge and belief, it conforms to the requirements established in the Standard Specifications of the Town of Knightdale.
By: _____ Date: _____
Town Engineer
These plans are approved by the Town of Knightdale and serve as construction plans for this project.
By: _____ Date: _____
Administrator

FINAL DRAWING - RELEASED FOR CONSTRUCTION

MCADAMS
The John R. McAdams Company, Inc.
2905 Meridian Parkway
Durham, NC 27713

phone 919. 361. 5000
fax 919. 361. 2269
license number: C-0293, C-187

www.mcadamsco.com

CLIENT

ALLIANCE GROUP OF NC, LLC
7208 FALLS OF NEUSE RD, SUITE 101
RALEIGH, NORTH CAROLINA 27615
JACOB ANDERSON
PHONE: 919. 239. 9486

AGNC

DOWNTOWN NORTH AT KNIGHTDALE STATION
CONSTRUCTION DRAWINGS - PHASE 1
N SMITHFIELD ROAD
KNIGHTDALE, NORTH CAROLINA

NORTH CAROLINA PROFESSIONAL SEAL 051536 ENGINEER TYLER E. PROBST

REVISIONS

NO.	DATE	
1	----	----
2	----	----
3	----	----
4	----	----
5	----	----
6	----	----

PLAN INFORMATION

PROJECT NO.	AGN-21002
FILENAME	AGN21002-G1
CHECKED BY	JCM / TEP
DRAWN BY	MRC / LRS / RAD
SCALE	1" = 30'
DATE	02. 16. 2024

SHEET

GRADING PLAN - AREA "A"

C3.01

M:\Projects\AGN\AGN21002\04-Production\Engineering\Current Drawings\Construction Drawings Sets\Phase-1\AGN21002-G1.dwg, 2/16/2024 6:00:08 PM, Megan Clifford

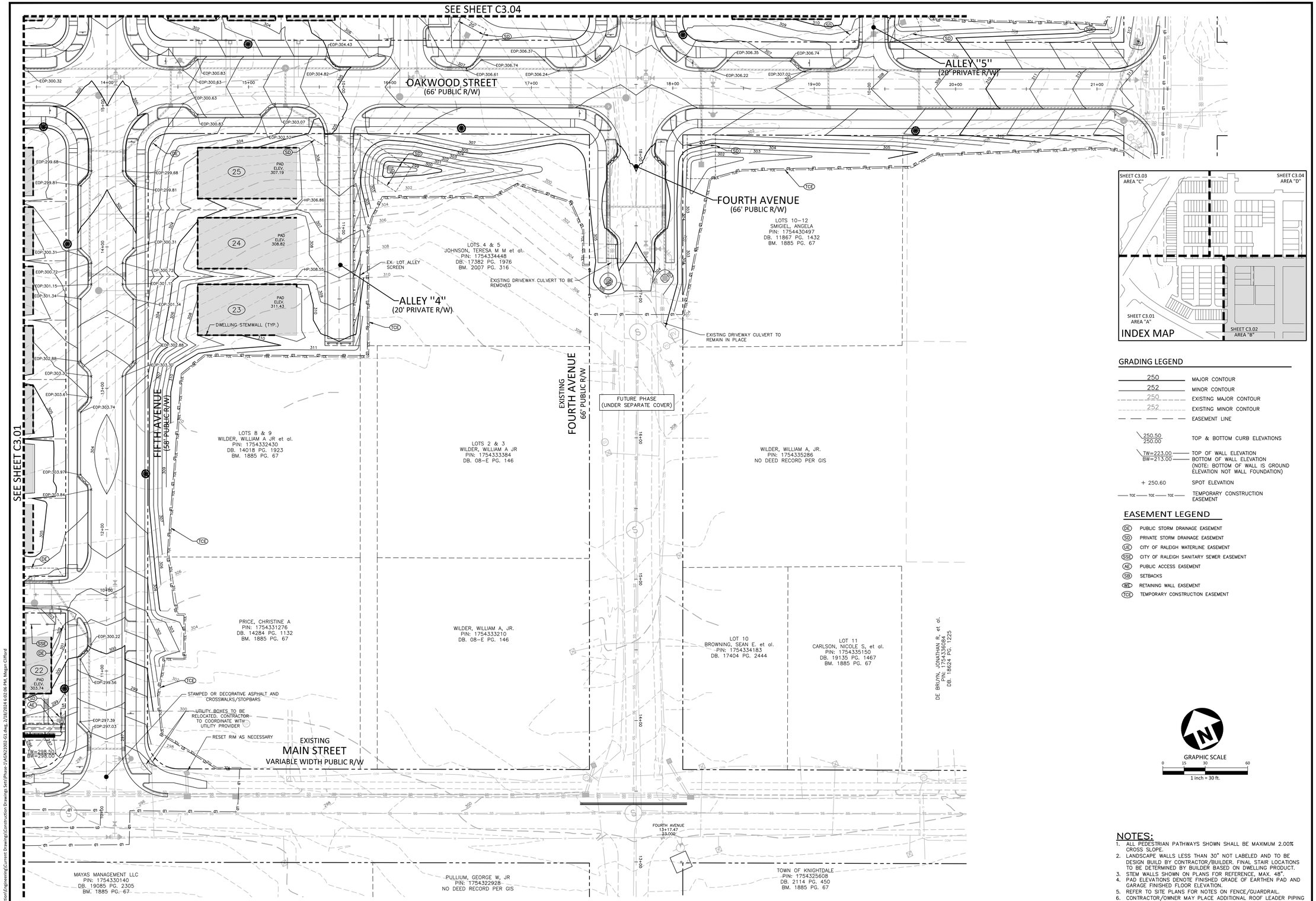

GRADING LEGEND

250	MAJOR CONTOUR
252	MINOR CONTOUR
250	EXISTING MAJOR CONTOUR
252	EXISTING MINOR CONTOUR
— — — —	EASEMENT LINE
250.50 / 250.00	TOP & BOTTOM CURB ELEVATIONS
TW=223.00 / BW=213.00	TOP OF WALL ELEVATION / BOTTOM OF WALL ELEVATION (NOTE: BOTTOM OF WALL IS GROUND ELEVATION NOT WALL FOUNDATION)
+ 250.60	SPOT ELEVATION
—— TCE —— TCE —— TCE ——	TEMPORARY CONSTRUCTION EASEMENT

EASEMENT LEGEND

- DE — PUBLIC STORM DRAINAGE EASEMENT
- SD — PRIVATE STORM DRAINAGE EASEMENT
- UE — CITY OF RALEIGH WATERLINE EASEMENT
- SSE — CITY OF RALEIGH SANITARY SEWER EASEMENT
- AE — PUBLIC ACCESS EASEMENT
- SB — SETBACKS
- RW — RETAINING WALL EASEMENT
- TCE — TEMPORARY CONSTRUCTION EASEMENT

GRAPHIC SCALE

0 15 30 60

1 inch = 30 ft.

NOTES:

1. ALL PEDESTRIAN PATHWAYS SHOWN SHALL BE MAXIMUM 2.00% CROSS SLOPE.
2. LANDSCAPE WALLS LESS THAN 30" NOT LABELED AND TO BE DESIGN BUILD BY CONTRACTOR/BUILDER. FINAL STAIR LOCATIONS TO BE DETERMINED BY BUILDER BASED ON DWELLING PRODUCT.
3. STEM WALLS SHOWN ON PLANS FOR REFERENCE, MAX. 48".
4. PAD ELEVATIONS DENOTE FINISHED GRADE OF EARTHEN PAD AND GARAGE FINISHED FLOOR ELEVATION.
5. REFER TO SITE PLANS FOR NOTES ON FENCE/GUARDRAIL.
6. CONTRACTOR/OWNER MAY PLACE ADDITIONAL ROOF LEADER PIPING TO CONNECT TO PROVIDED STORM SYSTEM AT MIN. 1.00%.

SEE SHEET C0.01 FOR ALL PROJECT, SITE, GRADING, STORM DRAINAGE AND UTILITY NOTES

ALL CONSTRUCTION SHALL BE IN ACCORDANCE WITH THE CURRENT TOWN OF KNIGHTDALE, CITY OF RALEIGH PUBLIC UTILITIES, AND NCDOT (WHERE APPLICABLE) ENGINEERING DESIGN AND CONSTRUCTION STANDARDS

Town Certification. This design has been reviewed by the Engineer for the Town of Knightdale, and to the best of my knowledge and belief, it conforms to the requirements established in the Standard Specifications of the Town of Knightdale.
By: _____ Date: _____
Town Engineer
These plans are approved by the Town of Knightdale and serve as construction plans for this project.
By: _____ Date: _____
Administrator

FINAL DRAWING - RELEASED FOR CONSTRUCTION

MCADAMS
The John R. McAdams Company, Inc.
2905 Meridian Parkway
Durham, NC 27713

phone 919. 361. 5000
fax 919. 361. 2269
license number: C-0293, C-187

www.mcadamsco.com

CLIENT

ALLIANCE GROUP OF NC, LLC
7208 FALLS OF NEUSE RD, SUITE 101
RALEIGH, NORTH CAROLINA 27615
JACOB ANDERSON
PHONE: 919. 239. 9486

AGNC

DOWNTOWN NORTH AT KNIGHTDALE STATION
CONSTRUCTION DRAWINGS - PHASE 1
N SMITHFIELD ROAD
KNIGHTDALE, NORTH CAROLINA

NORTH CAROLINA PROFESSIONAL SEAL 051536 ENGINEER TYLER E. PROBST

REVISIONS

NO.	DATE	
1	----	----
2	----	----
3	----	----
4	----	----
5	----	----
6	----	----

PLAN INFORMATION

PROJECT NO.	AGN-21002
FILENAME	AGN21002-G1
CHECKED BY	JCM / TEP
DRAWN BY	MRC / LRS / RAD
SCALE	1" = 30'
DATE	02. 16. 2024

SHEET

GRADING PLAN - AREA "B"

C3.02

M:\Projects\AGN\AGN21002\04-Production\Engineering\Current Drawings\Construction Drawings Set\Phase-1\AGN21002-G1.dwg, 2/18/2024 6:02:06 PM, Megan Clifford

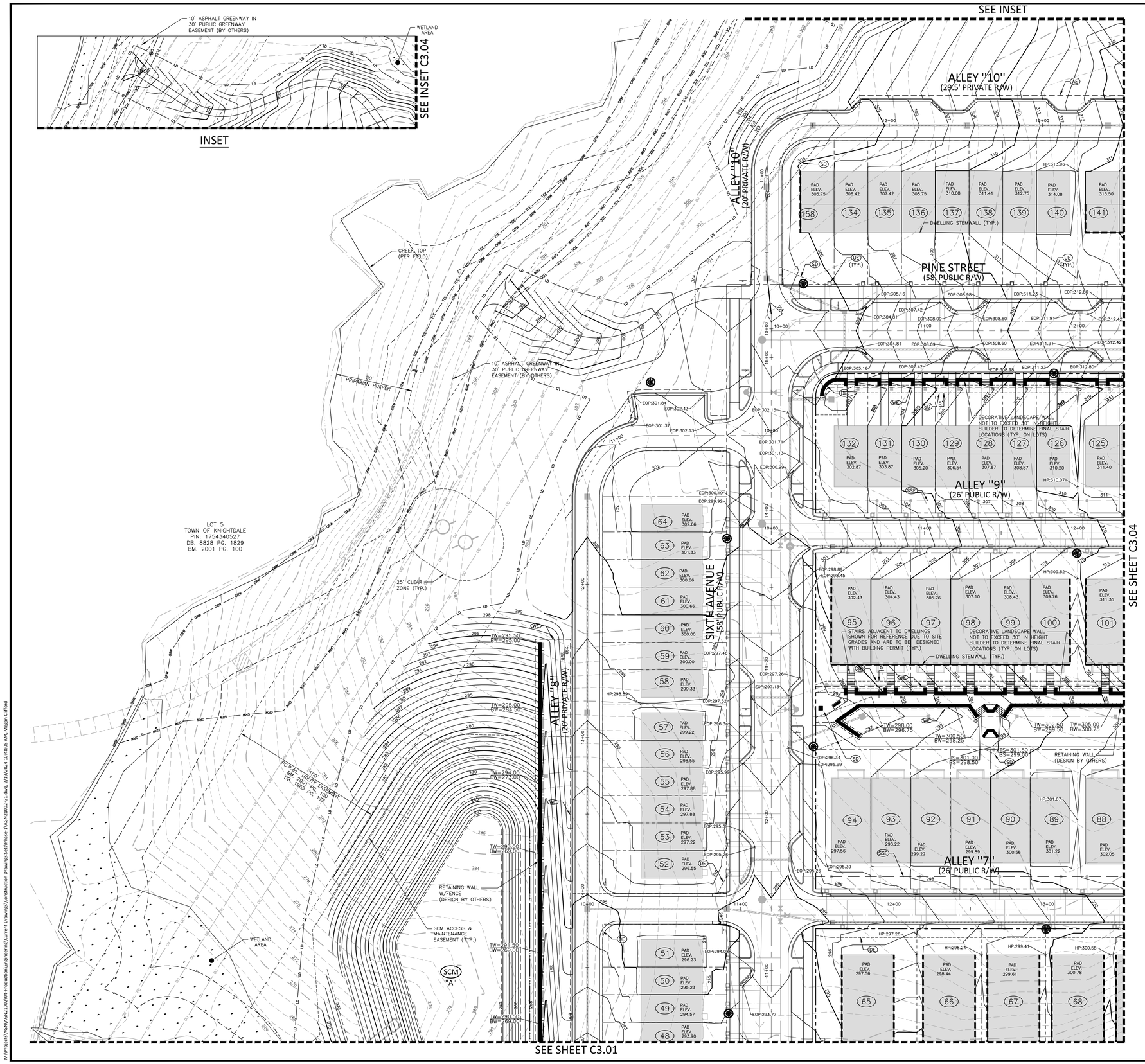

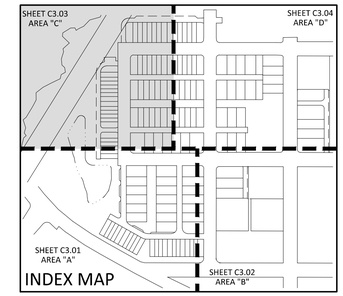

GRADING LEGEND

250	MAJOR CONTOUR
252	MINOR CONTOUR
250	EXISTING MAJOR CONTOUR
252	EXISTING MINOR CONTOUR
	EASEMENT LINE
250.50 / 250.00	TOP & BOTTOM CURB ELEVATIONS
TW=223.00 / BW=213.00	TOP OF WALL ELEVATION / BOTTOM OF WALL ELEVATION (NOTE: BOTTOM OF WALL IS GROUND ELEVATION NOT WALL FOUNDATION)
+ 250.60	SPOT ELEVATION
TCE	TEMPORARY CONSTRUCTION EASEMENT

EASEMENT LEGEND

- DE PUBLIC STORM DRAINAGE EASEMENT
- SD PRIVATE STORM DRAINAGE EASEMENT
- UE CITY OF RALEIGH WATERLINE EASEMENT
- SSE CITY OF RALEIGH SANITARY SEWER EASEMENT
- AE PUBLIC ACCESS EASEMENT
- SB SETBACKS
- WE RETAINING WALL EASEMENT
- TCE TEMPORARY CONSTRUCTION EASEMENT

LEGEND

- SCM STORMWATER CONTROL MEASURE

NOTES:

1. ALL PEDESTRIAN PATHWAYS SHOWN SHALL BE MAXIMUM 2.00% CROSS SLOPE.
2. LANDSCAPE WALLS LESS THAN 30" NOT LABELED AND TO BE DESIGN BUILD BY CONTRACTOR/BUILDER. FINAL STAIR LOCATIONS TO BE DETERMINED BY BUILDER BASED ON DWELLING PRODUCT.
3. STEM WALLS SHOWN ON PLANS FOR REFERENCE, MAX. 48".
4. PAD ELEVATIONS DENOTE FINISHED GRADE OF EARTHEN PAD AND GARAGE FINISHED FLOOR ELEVATION.
5. REFER TO SITE PLANS FOR NOTES ON FENCE/GUARDRAIL.
6. CONTRACTOR/OWNER MAY PLACE ADDITIONAL ROOF LEADER PIPING TO CONNECT TO PROVIDED STORM SYSTEM AT MIN. 1.00%.

GRAPHIC SCALE
0 15 30 60
1 inch = 30 ft.

SEE SHEET C0.01 FOR ALL PROJECT, SITE, GRADING, STORM DRAINAGE AND UTILITY NOTES

ALL CONSTRUCTION SHALL BE IN ACCORDANCE WITH THE CURRENT TOWN OF KNIGHTDALE, CITY OF RALEIGH PUBLIC UTILITIES, AND NCDOT (WHERE APPLICABLE) ENGINEERING DESIGN AND CONSTRUCTION STANDARDS

Town Certification. This design has been reviewed by the Engineer for the Town of Knightdale, and to the best of my knowledge and belief, it conforms to the requirements established in the Standard Specifications of the Town of Knightdale.
By: _____ Date: _____
Town Engineer
These plans are approved by the Town of Knightdale and serve as construction plans for this project.
By: _____ Date: _____
Administrator

FINAL DRAWING - RELEASED FOR CONSTRUCTION

MCADAMS
The John R. McAdams Company, Inc.
2905 Meridian Parkway
Durham, NC 27713

phone 919. 361. 5000
fax 919. 361. 2269
license number: C-0293, C-187

www.mcadamsco.com

CLIENT

ALLIANCE GROUP OF NC, LLC
7208 FALLS OF NEUSE RD, SUITE 101
RALEIGH, NORTH CAROLINA 27615
JACOB ANDERSON
PHONE: 919. 239. 9486

AGNC

DOWNTOWN NORTH AT KNIGHTDALE STATION
CONSTRUCTION DRAWINGS - PHASE 1
N SMITHFIELD ROAD
KNIGHTDALE, NORTH CAROLINA

NORTH CAROLINA PROFESSIONAL SEAL 051536 ENGINEER TYLER E. PROBST

REVISIONS

NO.	DATE	
1	----	----
2	----	----
3	----	----
4	----	----
5	----	----
6	----	----

PLAN INFORMATION

PROJECT NO.	AGN-21002
FILENAME	AGN21002-G1
CHECKED BY	JCM / TEP
DRAWN BY	MRC / LRS / RAD
SCALE	1" = 30'
DATE	02. 16. 2024

SHEET

GRADING PLAN - AREA "C"

C3.03

M:\Projects\AGN\AGN21002\04-Production\Engineering\Current Drawings\Construction Drawings Sets\Phase-1\AGN21002-G1.dwg, 2/19/2024 10:48:05 AM, Megan Clifford

STORM DRAINAGE STRUCTURE TABLE:

CB-138 (NCDOT 840.03) T/C=312.25 INV IN=305.50 (CB-140) INV IN=304.60 (CB-139) INV OUT=303.93	CB-144 (NCDOT 840.03) T/C=328.36 INV IN=323.50 (DI-144A) INV OUT=321.00	CB-215 (NCDOT 840.03) T/C=303.53 INV IN=296.76 (VG-216) INV OUT=296.41	CB-241B (NCDOT 840.03) T/C=323.07 INV IN=313.20 (CB-242) INV IN=314.50 (CB-256) INV OUT=312.64	CB-244 (NCDOT 840.03) T/C=327.60 INV IN=320.00 (CB-245) INV OUT=319.90	CB-256 (NCDOT 840.03) T/C=324.64 INV IN=317.00 (CB-257) INV OUT=316.00	DI-144A (NCDOT 840.16) T/G=330.50 INV IN=324.10 (DI-144B) INV OUT=324.00	DI-152 (NCDOT 840.16) T/G=322.50 INV OUT=315.00	DI-255 (NCDOT 840.16) T/G=321.33 INV OUT=315.00	VG-228 (Valley Grate) T/C=311.82 INV IN=304.54 (VG-229) INV OUT=304.24
CB-139 (NCDOT 840.03) T/C=312.25 INV OUT=304.77	CB-210 (NCDOT 840.03) T/C=306.55 INV IN=298.29 (CB-211) INV OUT=298.19	CB-230 (NCDOT 840.03) T/C=317.30 INV IN=310.25 (CB-231) INV OUT=308.66	CB-242 (NCDOT 840.03) T/C=321.92 INV IN=314.20 (CB-243) INV OUT=314.10	CB-245 (NCDOT 840.03) T/C=327.60 INV IN=320.55 (CB-246) INV OUT=320.22	CB-257 (NCDOT 840.03) T/C=325.90 INV IN=318.00 (CB-260) INV IN=318.30 (CB-258) INV OUT=317.70	DI-144B (NCDOT 840.16) T/G=330.50 INV OUT=324.50	DI-213 (NCDOT 840.16) T/G=305.00 INV IN=302.25 (YI-291) INV OUT=301.83	VG-208 (Valley Grate) T/C=301.61 INV IN=292.81 (VG-209) INV OUT=292.71	VG-229 (Valley Grate) T/C=315.07 INV IN=306.75 (VG-232) INV IN=308.18 (CB-230) INV OUT=306.46
CB-140 (NCDOT 840.03) T/C=320.29 INV IN=312.92 (CB-143) INV IN=312.73 (CB-141) INV OUT=311.99	CB-211 (NCDOT 840.03) T/C=309.73 INV IN=301.26 (CB-212) INV OUT=300.44	CB-231 (NCDOT 840.03) T/C=317.30 INV OUT=310.50	CB-243 (NCDOT 840.03) T/C=321.92 INV IN=314.55 (CB-243A) INV OUT=314.45	CB-246 (NCDOT 840.03) T/C=329.23 INV IN=321.84 (CB-247) INV OUT=321.74	CB-258 (NCDOT 840.03) T/C=326.10 INV IN=318.80 (CB-259) INV OUT=318.67	DI-150A (NCDOT 840.16) T/G=311.84 INV IN=306.29 (DI-151) INV OUT=306.19	DI-218 (NCDOT 840.16) T/G=306.25 INV OUT=300.50	VG-209 (Valley Grate) T/C=304.27 INV IN=296.21 (CB-210) INV IN=295.45 (CB-214) INV OUT=294.85	VG-232 (Valley Grate) T/C=316.50 INV IN=309.53 (VG-233) INV OUT=309.43
CB-141 (NCDOT 840.03) T/C=320.44 INV IN=314.00 (DI-142) INV OUT=312.95	CB-212 (NCDOT 840.03) T/C=310.08 INV IN=306.90 (YI-298) INV IN=301.60 (DI-213) INV OUT=301.50	CB-241 (NCDOT 840.03) T/C=320.15 INV IN=311.75 (CB-241A) INV OUT=311.10	CB-243A (NCDOT 840.03) T/C=325.87 INV IN=318.14 (CB-244) INV IN=318.35 (CB-243B) INV OUT=317.61	CB-247 (NCDOT 840.03) T/C=331.50 INV IN=325.00 (CB-247A) INV IN=323.40 (CB-248) INV OUT=322.30	CB-259 (NCDOT 840.03) T/C=326.10 INV OUT=319.00	DI-151 (NCDOT 840.16) T/G=314.70 INV IN=308.90 (DI-151A) INV OUT=308.80	DI-234 (NCDOT 840.16) T/G=326.03 INV IN=314.51 (DI-235) INV OUT=314.41	VG-216 (Valley Grate) T/C=305.13 INV IN=297.70 (VG-217) INV OUT=297.43	VG-233 (Valley Grate) T/C=321.01 INV IN=313.07 (DI-234) INV OUT=312.97
CB-143 (NCDOT 840.03) T/C=328.36 INV IN=320.76 (CB-144) INV OUT=320.66	CB-214 (NCDOT 840.03) T/C=303.53 INV IN=296.22 (CB-215) INV OUT=296.12	CB-241A (NCDOT 840.03) T/C=323.07 INV IN=312.44 (CB-241B) INV OUT=312.34	CB-243B (NCDOT 840.03) T/C=325.87 INV OUT=318.56	CB-248 (NCDOT 840.03) T/C=331.50 INV OUT=323.60	DI-142 (NCDOT 840.16) T/G=319.01 INV OUT=314.50	DI-151A (NCDOT 840.16) T/G=317.56 INV IN=310.83 (DI-152) INV OUT=310.73	DI-235 (NCDOT 840.16) T/G=320.41 INV IN=316.85 (YI-297) INV OUT=315.20	VG-217 (Valley Grate) T/C=306.79 INV IN=300.27 (DI-218) INV OUT=300.19	

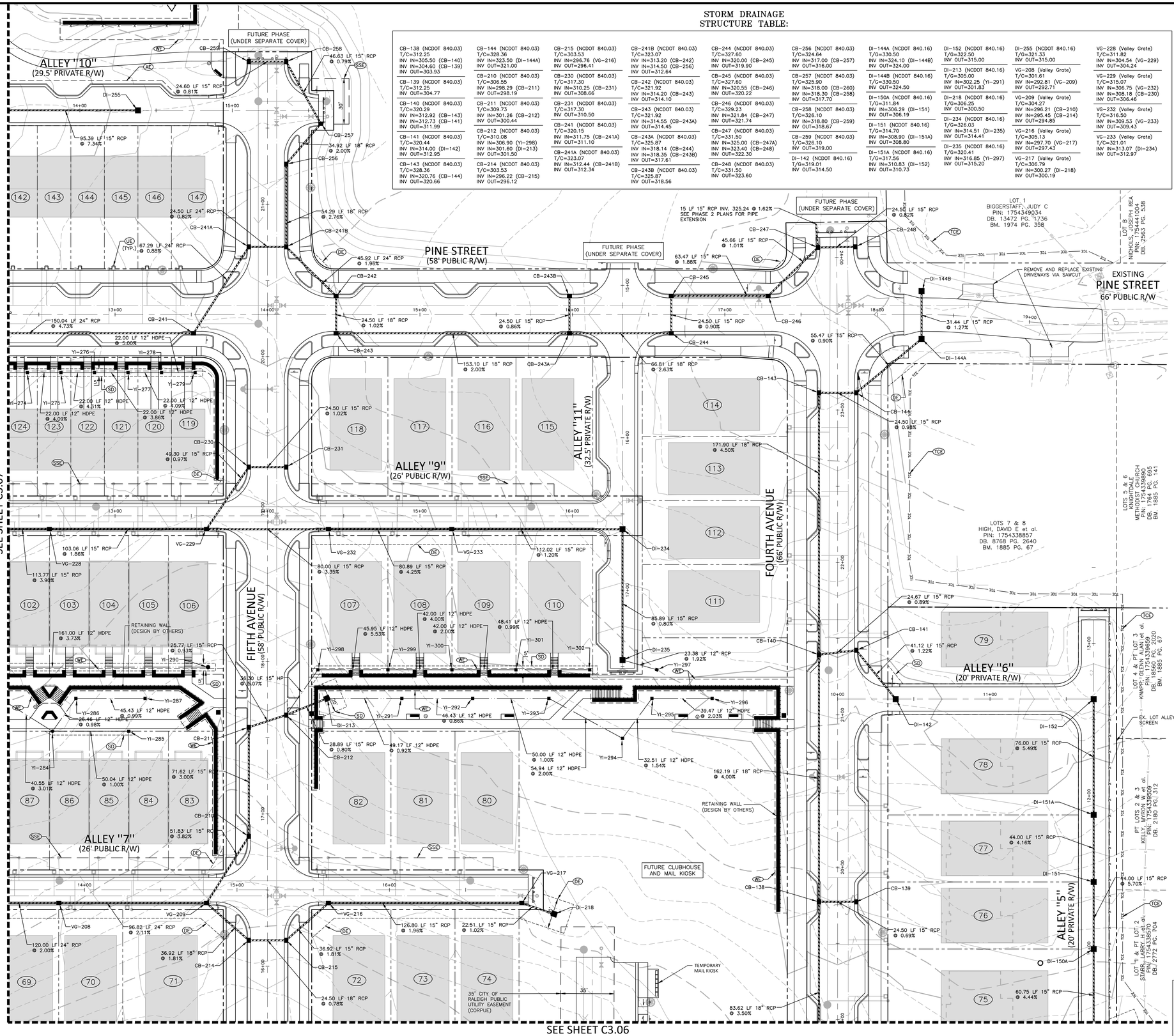

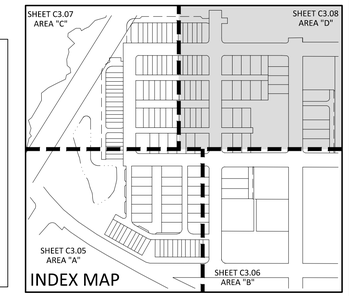

DRAINAGE LEGEND

- FLARED END SECTION
- ENDWALL SECTION
- CATCH BASIN
- DROP INLET
- STORM SERVICE INLET
- STORM SERVICE ROOF-DRAIN
- JUNCTION BOX
- STORM DRAINAGE
- STORM SERVICE LINE
- TCE — TEMPORARY CONSTRUCTION EASEMENT

EASEMENT LEGEND

- DE — PUBLIC STORM DRAINAGE EASEMENT
- SD — PRIVATE STORM DRAINAGE EASEMENT
- UE — CITY OF RALEIGH WATERLINE EASEMENT
- SSE — CITY OF RALEIGH SANITARY SEWER EASEMENT
- AE — PUBLIC ACCESS EASEMENT
- SB — SETBACKS
- WE — RETAINING WALL EASEMENT
- TCE — TEMPORARY CONSTRUCTION EASEMENT

GRAPHIC SCALE
0 15 30 60
1 inch = 30 ft.

NOTES:

1. WHERE DRAINAGE STRUCTURES ARE SHOWN WITHIN A LABELED STREET OR ALLEY, THE RIGHT OF WAY OR ACCESS EASEMENT MAY ACT AS THE DRAINAGE EASEMENT.
2. YARD INLET INFORMATION CAN BE FOUND ON STORM DETAIL SHEET C8.02

Town Certification. This design has been reviewed by the Engineer for the Town of Knightdale, and to the best of my knowledge and belief, it conforms to the requirements established in the Standard Specifications of the Town of Knightdale.
By: _____ Date: _____
Town Engineer
These plans are approved by the Town of Knightdale and serve as construction plans for this project.
By: _____ Date: _____
Administrator

FINAL DRAWING - RELEASED FOR CONSTRUCTION

MCADAMS
The John R. McAdams Company, Inc.
2905 Meridian Parkway
Durham, NC 27713
phone 919. 361. 5000
fax 919. 361. 2269
license number: C-0293, C-187
www.mcadamsco.com

CLIENT

ALLIANCE GROUP OF NC, LLC
7208 FALLS OF NEUSE RD, SUITE 101
RALEIGH, NORTH CAROLINA 27615
JACOB ANDERSON
PHONE: 919. 239. 9486

AGNC ARCHITECTURE / CONSULTING / PLANNING

DOWNTOWN NORTH AT KNIGHTDALE STATION
CONSTRUCTION DRAWINGS - PHASE 1
N SMITHFIELD ROAD
KNIGHTDALE, NORTH CAROLINA

NORTH CAROLINA PROFESSIONAL SEAL 051536 ENGINEER TYLER E. PRIEST

REVISIONS

NO.	DATE	
1	----	----
2	----	----
3	----	----
4	----	----
5	----	----
6	----	----

PLAN INFORMATION

PROJECT NO.	AGN-21002
FILENAME	AGN21002-G2
CHECKED BY	JCM / TEP
DRAWN BY	MRC / LRS / RAD
SCALE	1" = 30'
DATE	02. 16. 2024

SHEET

STORM DRAINAGE PLAN - AREA "D"

C3.08

M:\Projects\AGN\AGN21002\04-Production\Engineering\Current Drawings\Construction Drawings Sets\Phase-1\AGN21002-G2.dwg, 2/19/2024 5:37:40 PM, Tyler Priest

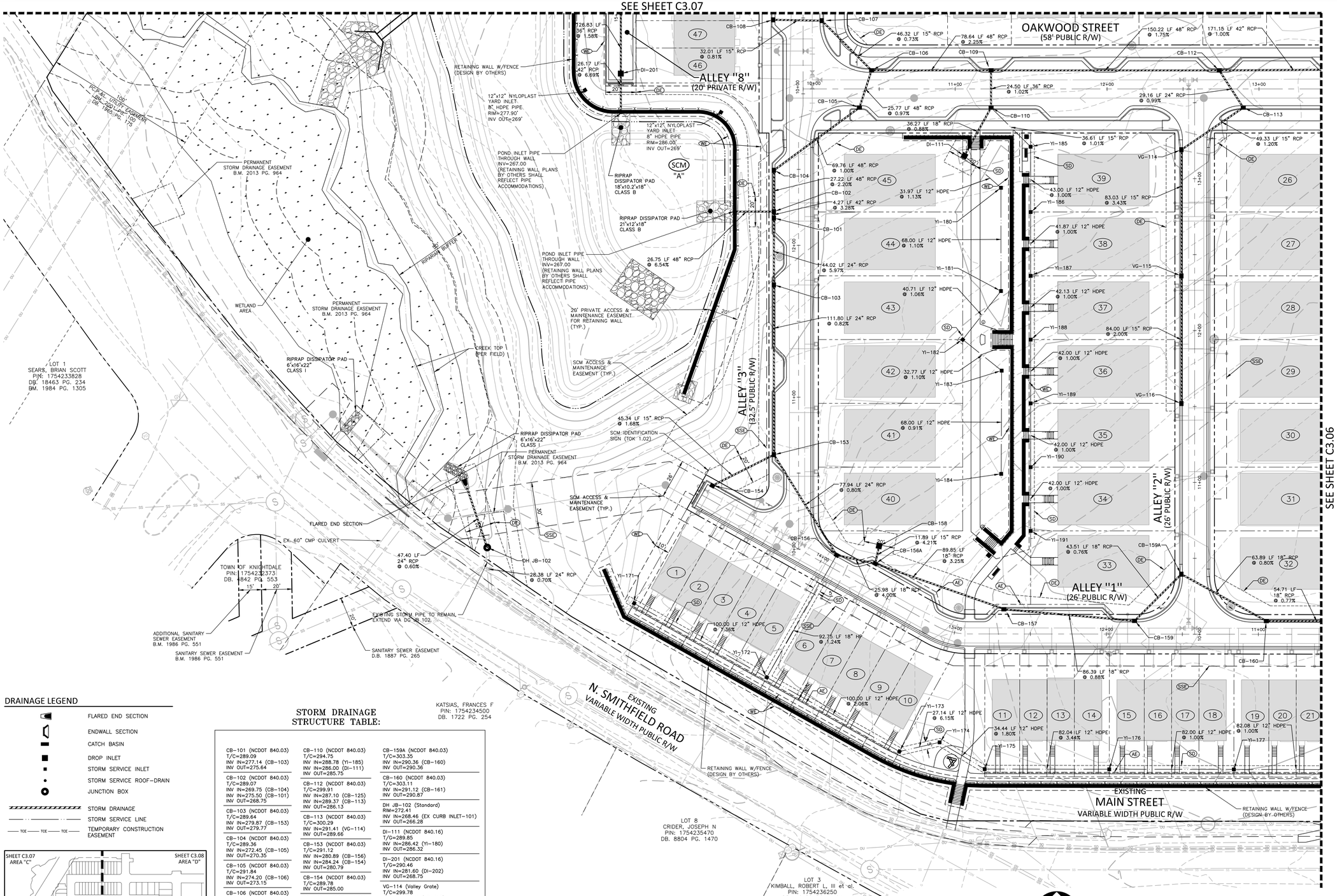

DRAINAGE LEGEND

- FLARED END SECTION
- ENDWALL SECTION
- CATCH BASIN
- DROP INLET
- STORM SERVICE INLET
- STORM SERVICE ROOF-DRAIN
- JUNCTION BOX
- STORM DRAINAGE
- STORM SERVICE LINE
- TCE — TEMPORARY CONSTRUCTION EASEMENT

STORM DRAINAGE STRUCTURE TABLE:

CB-101 (NCDOT 840.03) T/C=289.09 INV IN=277.14 (CB-103) INV OUT=275.64	CB-110 (NCDOT 840.03) T/C=294.75 INV IN=288.78 (YI-185) INV IN=286.00 (DI-111) INV OUT=285.75	CB-159A (NCDOT 840.03) T/C=303.35 INV IN=290.36 (CB-160) INV OUT=290.36
CB-102 (NCDOT 840.03) T/C=289.07 INV IN=269.75 (CB-104) INV IN=275.50 (CB-101) INV OUT=268.75	CB-112 (NCDOT 840.03) T/C=299.91 INV IN=287.10 (CB-125) INV IN=289.37 (CB-113) INV OUT=286.13	CB-160 (NCDOT 840.03) T/C=303.11 INV IN=291.12 (CB-161) INV OUT=290.87
CB-103 (NCDOT 840.03) T/C=289.64 INV IN=279.87 (CB-153) INV OUT=279.77	CB-113 (NCDOT 840.03) T/C=300.29 INV IN=291.41 (VG-114) INV OUT=289.66	DH JB-102 (Standard) RIM=272.41 INV IN=268.46 (EX CURB INLET-101) INV OUT=266.28
CB-104 (NCDOT 840.03) T/C=289.36 INV IN=272.45 (CB-105) INV OUT=270.35	CB-153 (NCDOT 840.03) T/C=291.12 INV IN=280.89 (CB-156) INV IN=284.24 (CB-154) INV OUT=280.79	DI-111 (NCDOT 840.16) T/G=289.85 INV IN=286.42 (YI-180) INV OUT=286.32
CB-105 (NCDOT 840.03) T/C=291.84 INV IN=274.20 (CB-106) INV OUT=273.15	CB-154 (NCDOT 840.03) T/C=289.78 INV OUT=285.00	DI-201 (NCDOT 840.16) T/G=290.46 INV IN=281.60 (DI-202) INV OUT=268.75
CB-106 (NCDOT 840.03) T/C=292.13 INV IN=281.00 (CB-109) INV IN=285.21 (CB-107) INV OUT=274.45	CB-156 (NCDOT 840.03) T/C=293.15 INV IN=281.85 (YI-172) INV IN=285.01 (CB-156A) INV OUT=281.51	VG-114 (Valley Grate) T/C=299.78 INV IN=292.10 (VG-115) INV OUT=292.00
CB-107 (NCDOT 840.03) T/C=293.32 INV IN=285.64 (CB-108) INV OUT=285.55	CB-156A (NCDOT 840.03) T/C=293.90 INV IN=286.15 (CB-157) INV IN=286.50 (CB-158) INV OUT=286.05	VG-115 (Valley Grate) T/C=302.07 INV IN=295.05 (VG-116) INV OUT=294.95
CB-108 (NCDOT 840.03) T/C=293.19 INV OUT=285.90	CB-157 (NCDOT 840.03) T/C=297.51 INV IN=289.17 (CB-159) INV OUT=289.07	VG-116 (Valley Grate) T/C=304.39 INV OUT=296.73
CB-109 (NCDOT 840.03) T/C=294.75 INV IN=283.50 (CB-112) INV IN=285.50 (CB-110) INV OUT=282.77	CB-159 (NCDOT 840.03) T/C=300.76 INV IN=290.03 (CB-159A) INV OUT=289.93	FLARED END SECTION INV=266.00

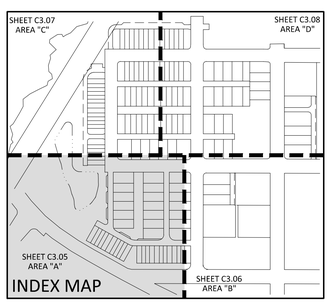

EASEMENT LEGEND

- (DE) PUBLIC STORM DRAINAGE EASEMENT
- (SD) PRIVATE STORM DRAINAGE EASEMENT
- (UE) CITY OF RALEIGH WATERLINE EASEMENT
- (SSE) CITY OF RALEIGH SANITARY SEWER EASEMENT
- (AE) PUBLIC ACCESS EASEMENT
- (SB) SETBACKS
- (WE) RETAINING WALL EASEMENT
- (TCE) TEMPORARY CONSTRUCTION EASEMENT

LEGEND

- (SCM) STORMWATER CONTROL MEASURE

GRAPHIC SCALE
0 15 30 60
1 inch = 30 ft.

SEE SHEET C0.01 FOR ALL PROJECT, SITE, GRADING, STORM DRAINAGE AND UTILITY NOTES

ALL CONSTRUCTION SHALL BE IN ACCORDANCE WITH THE CURRENT TOWN OF KNIGHTDALE, CITY OF RALEIGH PUBLIC UTILITIES, AND NCDOT (WHERE APPLICABLE) ENGINEERING DESIGN AND CONSTRUCTION STANDARDS

NOTES:

1. WHERE DRAINAGE STRUCTURES ARE SHOWN WITHIN A LABELED STREET OR ALLEY, THE RIGHT OF WAY OR ACCESS EASEMENT MAY ACT AS THE DRAINAGE EASEMENT.
2. YARD INLET INFORMATION CAN BE FOUND ON STORM DETAIL SHEET C8.02

Town Certification. This design has been reviewed by the Engineer for the Town of Knightdale, and to the best of my knowledge and belief, it conforms to the requirements established in the Standard Specifications of the Town of Knightdale.
By: _____ Date: _____
Town Engineer
These plans are approved by the Town of Knightdale and serve as construction plans for this project.
By: _____ Date: _____
Administrator

FINAL DRAWING - RELEASED FOR CONSTRUCTION

MCADAMS
The John R. McAdams Company, Inc.
2905 Meridian Parkway
Durham, NC 27713

phone 919. 361. 5000
fax 919. 361. 2269
license number: C-0293, C-187

www.mcadamsco.com

CLIENT

ALLIANCE GROUP OF NC, LLC
7208 FALLS OF NEUSE RD, SUITE 101
RALEIGH, NORTH CAROLINA 27615
JACOB ANDERSON
PHONE: 919. 239. 9486

AGNC

DOWNTOWN NORTH AT KNIGHTDALE STATION
CONSTRUCTION DRAWINGS - PHASE 1
N SMITHFIELD ROAD
KNIGHTDALE, NORTH CAROLINA

NORTH CAROLINA PROFESSIONAL SEAL 051536 ENGINEER TYLER E. PROBST

REVISIONS

NO.	DATE	
1	----	----
2	----	----
3	----	----
4	----	----
5	----	----
6	----	----

PLAN INFORMATION

PROJECT NO.	AGN-21002
FILENAME	AGN21002-G2
CHECKED BY	JCM / TEP
DRAWN BY	MRC / LRS / RAD
SCALE	1" = 30'
DATE	02. 16. 2024

SHEET

STORM DRAINAGE PLAN - AREA "A"

C3.05

M:\Projects\AGN\AGN21002\04-Production\Engineering\Current Drawings\Construction Drawings Sets\Phase-1\AGN21002-G2.dwg, 2/19/2024 11:36:13 AM, Megan Clifford

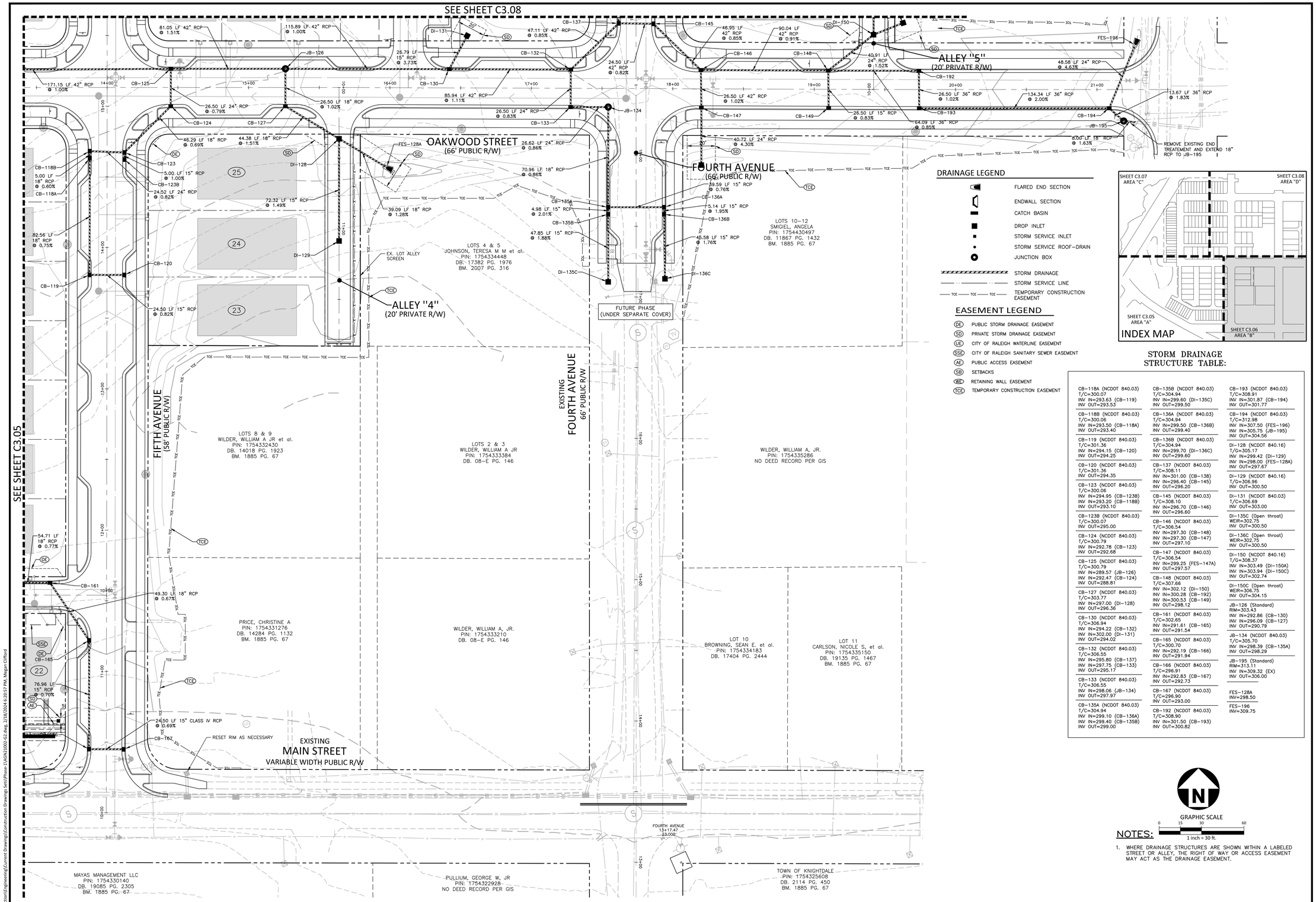

DRAINAGE LEGEND

- FLARED END SECTION
- ENDWALL SECTION
- CATCH BASIN
- DROP INLET
- STORM SERVICE INLET
- STORM SERVICE ROOF-DRAIN
- JUNCTION BOX
- STORM DRAINAGE
- STORM SERVICE LINE
- TEMPORARY CONSTRUCTION EASEMENT

EASEMENT LEGEND

- DE — PUBLIC STORM DRAINAGE EASEMENT
- SD — PRIVATE STORM DRAINAGE EASEMENT
- UE — CITY OF RALEIGH WATERLINE EASEMENT
- SSE — CITY OF RALEIGH SANITARY SEWER EASEMENT
- AE — PUBLIC ACCESS EASEMENT
- SB — SETBACKS
- RW — RETAINING WALL EASEMENT
- TCE — TEMPORARY CONSTRUCTION EASEMENT

STORM DRAINAGE STRUCTURE TABLE:

CB-118A (NCDOT 840.03) T/C=300.07 INV IN=293.63 (CB-119) INV OUT=293.53	CB-135B (NCDOT 840.03) T/C=304.94 INV IN=299.60 (DI-135C) INV OUT=299.50	CB-193 (NCDOT 840.03) T/C=308.91 INV IN=301.87 (CB-194) INV OUT=301.77
CB-118B (NCDOT 840.03) T/C=300.06 INV IN=293.50 (CB-118A) INV OUT=293.40	CB-136A (NCDOT 840.03) T/C=304.94 INV IN=299.50 (CB-136B) INV OUT=299.40	CB-194 (NCDOT 840.03) T/C=312.98 INV IN=307.50 (FES-196) INV IN=305.75 (JB-195) INV OUT=304.56
CB-119 (NCDOT 840.03) T/C=301.36 INV IN=294.15 (CB-120) INV OUT=294.25	CB-136B (NCDOT 840.03) T/C=304.94 INV IN=299.70 (DI-136C) INV OUT=299.60	DI-128 (NCDOT 840.16) T/G=305.17 INV IN=299.42 (DI-129) INV IN=298.00 (FES-128A) INV OUT=297.67
CB-120 (NCDOT 840.03) T/C=301.36 INV OUT=294.35	CB-137 (NCDOT 840.03) T/C=308.11 INV IN=301.00 (CB-138) INV IN=296.40 (CB-145) INV OUT=296.20	DI-129 (NCDOT 840.16) T/G=306.96 INV OUT=300.50
CB-123 (NCDOT 840.03) T/C=300.06 INV IN=294.95 (CB-123B) INV IN=293.20 (CB-118B) INV OUT=293.10	CB-145 (NCDOT 840.03) T/C=308.10 INV IN=296.70 (CB-146) INV OUT=296.60	DI-131 (NCDOT 840.03) T/C=306.69 INV OUT=303.00
CB-123B (NCDOT 840.03) T/C=300.07 INV OUT=295.00	CB-146 (NCDOT 840.03) T/C=306.54 INV IN=297.30 (CB-148) INV IN=297.30 (CB-147) INV OUT=297.10	DI-135C (Open throat) WEIR=302.75 INV OUT=300.50
CB-124 (NCDOT 840.03) T/C=300.79 INV IN=292.78 (CB-123) INV OUT=292.68	CB-147 (NCDOT 840.03) T/C=306.54 INV IN=299.25 (FES-147A) INV OUT=297.57	DI-136C (Open throat) WEIR=302.75 INV OUT=300.50
CB-125 (NCDOT 840.03) T/C=300.79 INV IN=289.57 (JB-126) INV IN=292.47 (CB-124) INV OUT=288.81	CB-148 (NCDOT 840.03) T/C=307.66 INV IN=302.12 (DI-150) INV IN=300.28 (CB-192) INV IN=300.53 (CB-149) INV OUT=298.12	DI-150 (NCDOT 840.16) T/G=308.37 INV IN=303.49 (DI-150A) INV IN=303.94 (DI-150C) INV OUT=302.74
CB-127 (NCDOT 840.03) T/C=303.77 INV IN=297.00 (DI-128) INV OUT=296.36	CB-161 (NCDOT 840.03) T/C=302.65 INV IN=291.61 (CB-165) INV OUT=291.54	DI-150C (Open throat) WEIR=306.75 INV OUT=304.15
CB-130 (NCDOT 840.03) T/C=306.94 INV IN=294.22 (CB-132) INV IN=302.00 (DI-131) INV OUT=294.02	CB-165 (NCDOT 840.03) T/C=300.70 INV IN=292.19 (CB-166) INV OUT=291.94	JB-126 (Standard) RIM=303.43 INV IN=292.86 (CB-130) INV IN=296.09 (CB-127) INV OUT=290.79
CB-132 (NCDOT 840.03) T/C=306.55 INV IN=295.80 (CB-137) INV IN=297.75 (CB-133) INV OUT=295.17	CB-166 (NCDOT 840.03) T/C=296.91 INV IN=292.83 (CB-167) INV OUT=292.73	JB-134 (NCDOT 840.03) T/C=305.70 INV IN=298.39 (CB-135A) INV OUT=298.29
CB-133 (NCDOT 840.03) T/C=306.55 INV IN=298.06 (JB-134) INV OUT=297.97	CB-167 (NCDOT 840.03) T/C=296.90 INV OUT=293.00	JB-195 (Standard) RIM=313.11 INV IN=309.32 (EX) INV OUT=306.00
CB-135A (NCDOT 840.03) T/C=304.94 INV IN=299.10 (CB-136A) INV IN=299.40 (CB-135B) INV OUT=299.00	CB-192 (NCDOT 840.03) T/C=308.90 INV IN=301.50 (CB-193) INV OUT=300.82	FES-128A INV=298.50 FES-196 INV=309.75

GRAPHIC SCALE
0 15 30 60
1 inch = 30 ft.

NOTES:

1. WHERE DRAINAGE STRUCTURES ARE SHOWN WITHIN A LABELED STREET OR ALLEY, THE RIGHT OF WAY OR ACCESS EASEMENT MAY ACT AS THE DRAINAGE EASEMENT.

Town Certification. This design has been reviewed by the Engineer for the Town of Knightdale, and to the best of my knowledge and belief, it conforms to the requirements established in the Standard Specifications of the Town of Knightdale.
By: _____ Date: _____
Town Engineer
These plans are approved by the Town of Knightdale and serve as construction plans for this project.
By: _____ Date: _____
Administrator

FINAL DRAWING - RELEASED FOR CONSTRUCTION

MCADAMS
The John R. McAdams Company, Inc.
2905 Meridian Parkway
Durham, NC 27713

phone 919. 361. 5000
fax 919. 361. 2269
license number: C-0293, C-187

www.mcadamsco.com

CLIENT

ALLIANCE GROUP OF NC, LLC
7208 FALLS OF NEUSE RD, SUITE 101
RALEIGH, NORTH CAROLINA 27615
JACOB ANDERSON
PHONE: 919. 239. 9486

AGNC

DOWNTOWN NORTH AT KNIGHTDALE STATION
CONSTRUCTION DRAWINGS - PHASE 1
N SMITHFIELD ROAD
KNIGHTDALE, NORTH CAROLINA

NORTH CAROLINA PROFESSIONAL SEAL 051536 ENGINEER TYLER E. PROSEY

REVISIONS

NO.	DATE	
1	----	----
2	----	----
3	----	----
4	----	----
5	----	----
6	----	----

PLAN INFORMATION

PROJECT NO.	AGN-21002
FILENAME	AGN21002-G2
CHECKED BY	JCM / TEP
DRAWN BY	MRC / LRS / RAD
SCALE	1" = 30'
DATE	02. 16. 2024

SHEET

STORM DRAINAGE PLAN - AREA "B"

C3.06

M:\Projects\AGN\AGN21002\04-Production\Engineering\Current Drawings\Construction Drawings Sets\Phase-1\AGN21002-G2.dwg, 2/18/2024 6:20:57 PM, Megan Clifford

STORM DRAINAGE STRUCTURE TABLE:

CB-219 (NCDOT 840.03) T/C=295.57 INV IN=285.97 (CB-220) INV OUT=285.77	CB-240 (NCDOT 840.03) T/C=312.60 INV OUT=305.54	DI-252 (NCDOT 840.16) T/G=303.56 INV IN=298.95 (DI-253) INV OUT=298.85
CB-220 (NCDOT 840.03) T/C=295.57 INV IN=286.75 (CB-221) INV OUT=286.22	CB-249 (NCDOT 840.03) T/C=304.88 INV IN=297.30 (DI-250) INV OUT=296.99	DI-253 (NCDOT 840.16) T/G=307.68 INV IN=302.00 (DI-254) INV OUT=301.90
CB-221 (NCDOT 840.03) T/C=296.82 INV IN=288.40 (CB-223) INV IN=290.75 (DI-222) INV OUT=287.94	DI-202 (NCDOT 840.16) T/G=294.70 INV IN=284.11 (DI-205) INV IN=287.68 (DI-203) INV OUT=283.61	DI-254 (NCDOT 840.16) T/G=314.28 INV IN=308.00 (DI-255) INV OUT=307.90
CB-223 (NCDOT 840.03) T/C=297.49 INV IN=289.50 (CB-225) INV IN=293.00 (YI-288) INV IN=292.75 (CB-224) INV OUT=289.10	DI-203 (NCDOT 840.16) T/G=298.10 INV IN=290.98 (DI-204) INV OUT=290.88	DI-264 (NCDOT 840.16) T/G=301.40 INV IN=298.30 (YI-265) INV OUT=297.10
CB-224 (NCDOT 840.03) T/C=297.49 INV OUT=293.00	DI-204 (NCDOT 840.16) T/G=300.40 INV OUT=294.50	JB-225A (Standard) RIM=299.77 INV IN=292.40 (CB-237) INV IN=293.53 (VG-226) INV OUT=291.74
CB-225 (NCDOT 840.03) T/C=299.44 INV IN=291.40 (JB-225A) INV OUT=291.06	DI-205 (NCDOT 840.16) T/G=294.94 INV IN=285.50 (CB-219) INV IN=286.70 (VG-206) INV OUT=285.02	VG-206 (Valley Grate) T/C=295.39 INV IN=288.15 (VG-207) INV OUT=287.40
CB-237 (NCDOT 840.03) T/C=302.80 INV IN=294.73 (CB-238) INV IN=296.13 (DI-264) INV OUT=294.12	DI-222 (NCDOT 840.16) T/G=296.13 INV IN=291.55 (YI-280) INV OUT=291.20	VG-207 (Valley Grate) T/C=298.26 INV IN=290.31 (VG-208) INV OUT=290.21
CB-238 (NCDOT 840.03) T/C=304.88 INV IN=297.35 (CB-239) INV IN=296.70 (CB-249) INV OUT=295.70	DI-250 (NCDOT 840.16) T/G=303.71 INV IN=297.87 (DI-251) INV OUT=297.77	VG-226 (Valley Grate) T/C=300.81 INV IN=294.50 (VG-227) INV OUT=294.22
CB-239 (NCDOT 840.03) T/C=312.60 INV IN=304.00 (CB-241) INV IN=305.35 (CB-240) INV OUT=303.50	DI-251 (NCDOT 840.16) T/G=302.97 INV IN=298.45 (DI-252) INV OUT=298.35	VG-227 (Valley Grate) T/C=306.42 INV IN=299.80 (VG-228) INV OUT=299.34

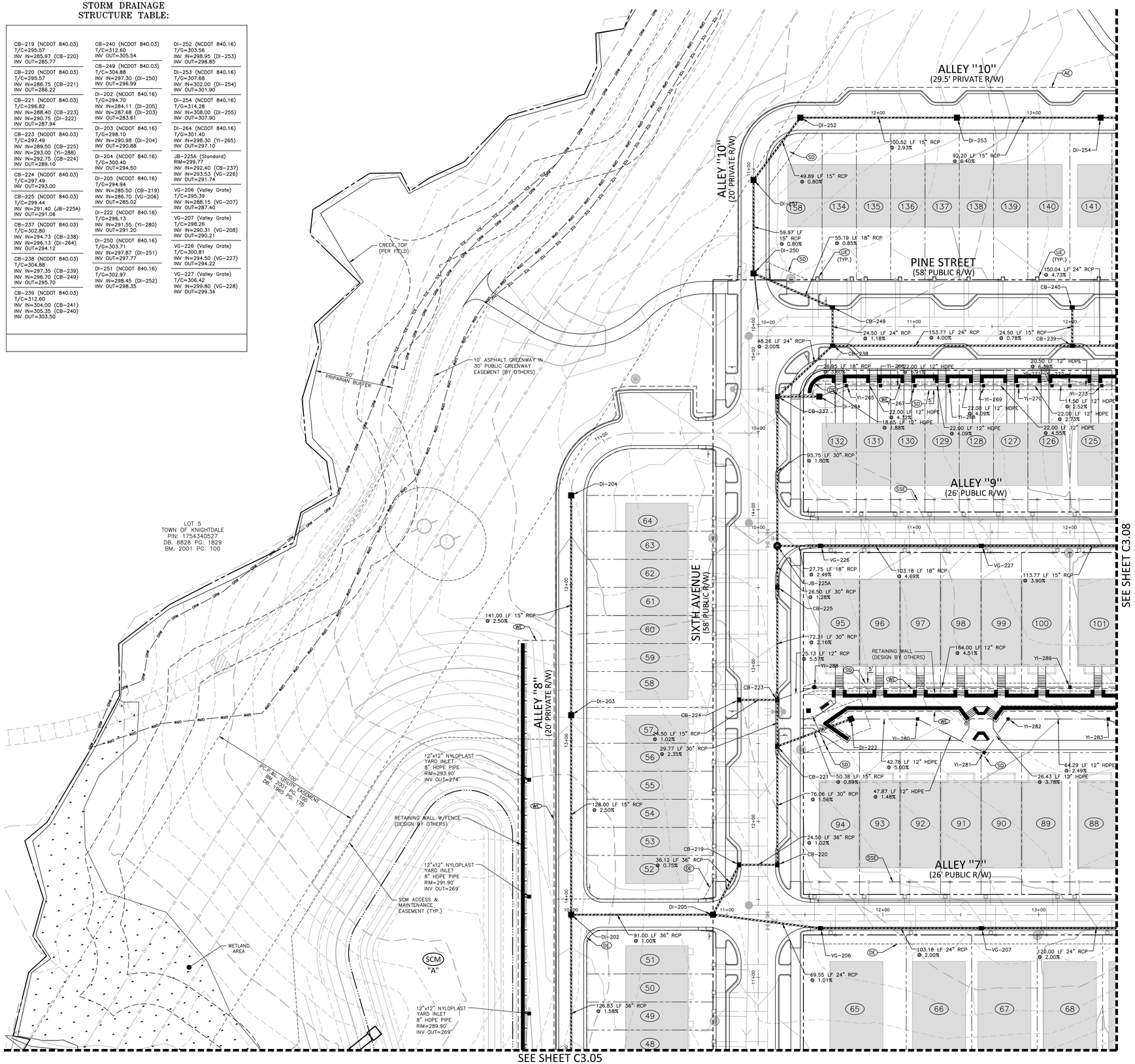

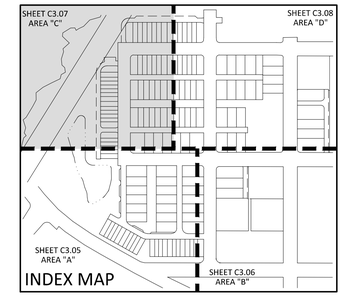

INDEX MAP

DRAINAGE LEGEND

- FLARED END SECTION
- ENDWALL SECTION
- CATCH BASIN
- DROP INLET
- STORM SERVICE INLET
- STORM SERVICE ROOF-DRAIN
- JUNCTION BOX
- STORM DRAINAGE
- STORM SERVICE LINE
- TCE — TEMPORARY CONSTRUCTION EASEMENT

EASEMENT LEGEND

- DE — PUBLIC STORM DRAINAGE EASEMENT
- SD — PRIVATE STORM DRAINAGE EASEMENT
- UE — CITY OF RALEIGH WATERLINE EASEMENT
- SSE — CITY OF RALEIGH SANITARY SEWER EASEMENT
- AE — PUBLIC ACCESS EASEMENT
- SB — SETBACKS
- WE — RETAINING WALL EASEMENT
- TCE — TEMPORARY CONSTRUCTION EASEMENT

LEGEND

- SCM — STORMWATER CONTROL MEASURE

GRAPHIC SCALE
0 15 30 60
1 inch = 30 ft.

NOTES:

1. WHERE DRAINAGE STRUCTURES ARE SHOWN WITHIN A LABELED STREET OR ALLEY, THE RIGHT OF WAY OR ACCESS EASEMENT MAY ACT AS THE DRAINAGE EASEMENT.
2. YARD INLET INFORMATION CAN BE FOUND ON STORM DETAIL SHEET C8.02

Town Certification. This design has been reviewed by the Engineer for the Town of Knightdale, and to the best of my knowledge and belief, it conforms to the requirements established in the Standard Specifications of the Town of Knightdale.
By: _____ Date: _____
Town Engineer
These plans are approved by the Town of Knightdale and serve as construction plans for this project.
By: _____ Date: _____
Administrator

FINAL DRAWING - RELEASED FOR CONSTRUCTION

MCADAMS
The John R. McAdams Company, Inc.
2905 Meridian Parkway
Durham, NC 27713

phone 919. 361. 5000
fax 919. 361. 2269
license number: C-0293, C-187

www.mcadamsco.com

CLIENT

ALLIANCE GROUP OF NC, LLC
7208 FALLS OF NEUSE RD, SUITE 101
RALEIGH, NORTH CAROLINA 27615
JACOB ANDERSON
PHONE: 919. 239. 9486

AGNC

DOWNTOWN NORTH AT KNIGHTDALE STATION
CONSTRUCTION DRAWINGS - PHASE 1
N SMITHFIELD ROAD
KNIGHTDALE, NORTH CAROLINA

NORTH CAROLINA PROFESSIONAL SEAL 051536 ENGINEER TYLER E. PROBST

REVISIONS

NO.	DATE	
1	----	----
2	----	----
3	----	----
4	----	----
5	----	----
6	----	----

PLAN INFORMATION

PROJECT NO.	AGN-21002
FILENAME	AGN21002-G2
CHECKED BY	JCM / TEP
DRAWN BY	MRC / LRS / RAD
SCALE	1" = 30'
DATE	02. 16. 2024

SHEET

STORM DRAINAGE PLAN - AREA "C"

C3.07

M:\Projects\AGN\AGN21002\04-Production\Engineering\Current Drawings\Construction Drawings Sets\Phase-1\AGN21002-G2.dwg, 2/19/2024 11:37:37 AM, Megan Clifford

STORM DRAINAGE STRUCTURE TABLE:

CB-138 (NCDOT 840.03) T/C=312.25 INV IN=305.50 (CB-140) INV IN=304.60 (CB-139) INV OUT=303.93	CB-144 (NCDOT 840.03) T/C=328.36 INV IN=323.50 (DI-144A) INV OUT=321.00	CB-215 (NCDOT 840.03) T/C=303.53 INV IN=296.76 (VG-216) INV OUT=296.41	CB-241B (NCDOT 840.03) T/C=323.07 INV IN=313.20 (CB-242) INV IN=314.50 (CB-256) INV OUT=312.64	CB-244 (NCDOT 840.03) T/C=327.60 INV IN=320.00 (CB-245) INV OUT=319.90	CB-256 (NCDOT 840.03) T/C=324.64 INV IN=317.00 (CB-257) INV OUT=316.00	DI-144A (NCDOT 840.16) T/G=330.50 INV IN=324.10 (DI-144B) INV OUT=324.00	DI-152 (NCDOT 840.16) T/G=322.50 INV OUT=315.00	DI-255 (NCDOT 840.16) T/G=321.33 INV OUT=315.00	VG-228 (Valley Grate) T/C=311.82 INV IN=304.54 (VG-229) INV OUT=304.24
CB-139 (NCDOT 840.03) T/C=312.25 INV OUT=304.77	CB-210 (NCDOT 840.03) T/C=306.55 INV IN=298.29 (CB-211) INV OUT=298.19	CB-230 (NCDOT 840.03) T/C=317.30 INV IN=310.25 (CB-231) INV OUT=308.66	CB-242 (NCDOT 840.03) T/C=321.92 INV IN=314.20 (CB-243) INV OUT=314.10	CB-245 (NCDOT 840.03) T/C=327.60 INV IN=320.55 (CB-246) INV OUT=320.22	CB-257 (NCDOT 840.03) T/C=325.90 INV IN=318.00 (CB-260) INV IN=318.30 (CB-258) INV OUT=317.70	DI-144B (NCDOT 840.16) T/G=330.50 INV OUT=324.50	DI-213 (NCDOT 840.16) T/G=305.00 INV IN=302.25 (YI-291) INV OUT=301.83	VG-208 (Valley Grate) T/C=301.61 INV IN=292.81 (VG-209) INV OUT=292.71	VG-229 (Valley Grate) T/C=315.07 INV IN=306.75 (VG-232) INV IN=308.18 (CB-230) INV OUT=306.46
CB-140 (NCDOT 840.03) T/C=320.29 INV IN=312.92 (CB-143) INV IN=312.73 (CB-141) INV OUT=311.99	CB-211 (NCDOT 840.03) T/C=309.73 INV IN=301.26 (CB-212) INV OUT=300.44	CB-231 (NCDOT 840.03) T/C=317.30 INV OUT=310.50	CB-243 (NCDOT 840.03) T/C=321.92 INV IN=314.55 (CB-243A) INV OUT=314.45	CB-246 (NCDOT 840.03) T/C=329.23 INV IN=321.84 (CB-247) INV OUT=321.74	CB-258 (NCDOT 840.03) T/C=326.10 INV IN=318.80 (CB-259) INV OUT=318.67	DI-150A (NCDOT 840.16) T/G=311.84 INV IN=306.29 (DI-151) INV OUT=306.19	DI-218 (NCDOT 840.16) T/G=306.25 INV OUT=300.50	VG-209 (Valley Grate) T/C=304.27 INV IN=296.21 (CB-210) INV IN=295.45 (CB-214) INV OUT=294.85	VG-232 (Valley Grate) T/C=316.50 INV IN=309.53 (VG-233) INV OUT=309.43
CB-141 (NCDOT 840.03) T/C=320.44 INV IN=314.00 (DI-142) INV OUT=312.95	CB-212 (NCDOT 840.03) T/C=310.08 INV IN=306.90 (YI-298) INV IN=301.60 (DI-213) INV OUT=301.50	CB-241 (NCDOT 840.03) T/C=320.15 INV IN=311.75 (CB-241A) INV OUT=311.10	CB-243A (NCDOT 840.03) T/C=325.87 INV IN=318.14 (CB-244) INV IN=318.35 (CB-243B) INV OUT=317.61	CB-247 (NCDOT 840.03) T/C=331.50 INV IN=325.00 (CB-247A) INV IN=323.40 (CB-248) INV OUT=322.30	CB-259 (NCDOT 840.03) T/C=326.10 INV OUT=319.00	DI-151 (NCDOT 840.16) T/G=314.70 INV IN=308.90 (DI-151A) INV OUT=308.80	DI-234 (NCDOT 840.16) T/G=326.03 INV IN=314.51 (DI-235) INV OUT=314.41	VG-216 (Valley Grate) T/C=305.13 INV IN=297.70 (VG-217) INV OUT=297.43	VG-233 (Valley Grate) T/C=321.01 INV IN=313.07 (DI-234) INV OUT=312.97
CB-143 (NCDOT 840.03) T/C=328.36 INV IN=320.76 (CB-144) INV OUT=320.66	CB-214 (NCDOT 840.03) T/C=303.53 INV IN=296.22 (CB-215) INV OUT=296.12	CB-241A (NCDOT 840.03) T/C=323.07 INV IN=312.44 (CB-241B) INV OUT=312.34	CB-243B (NCDOT 840.03) T/C=325.87 INV OUT=318.56	CB-248 (NCDOT 840.03) T/C=331.50 INV OUT=323.60	DI-142 (NCDOT 840.16) T/G=319.01 INV OUT=314.50	DI-151A (NCDOT 840.16) T/G=317.56 INV IN=310.83 (DI-152) INV OUT=310.73	DI-235 (NCDOT 840.16) T/G=320.41 INV IN=316.85 (YI-297) INV OUT=315.20	VG-217 (Valley Grate) T/C=306.79 INV IN=300.27 (DI-218) INV OUT=300.19	

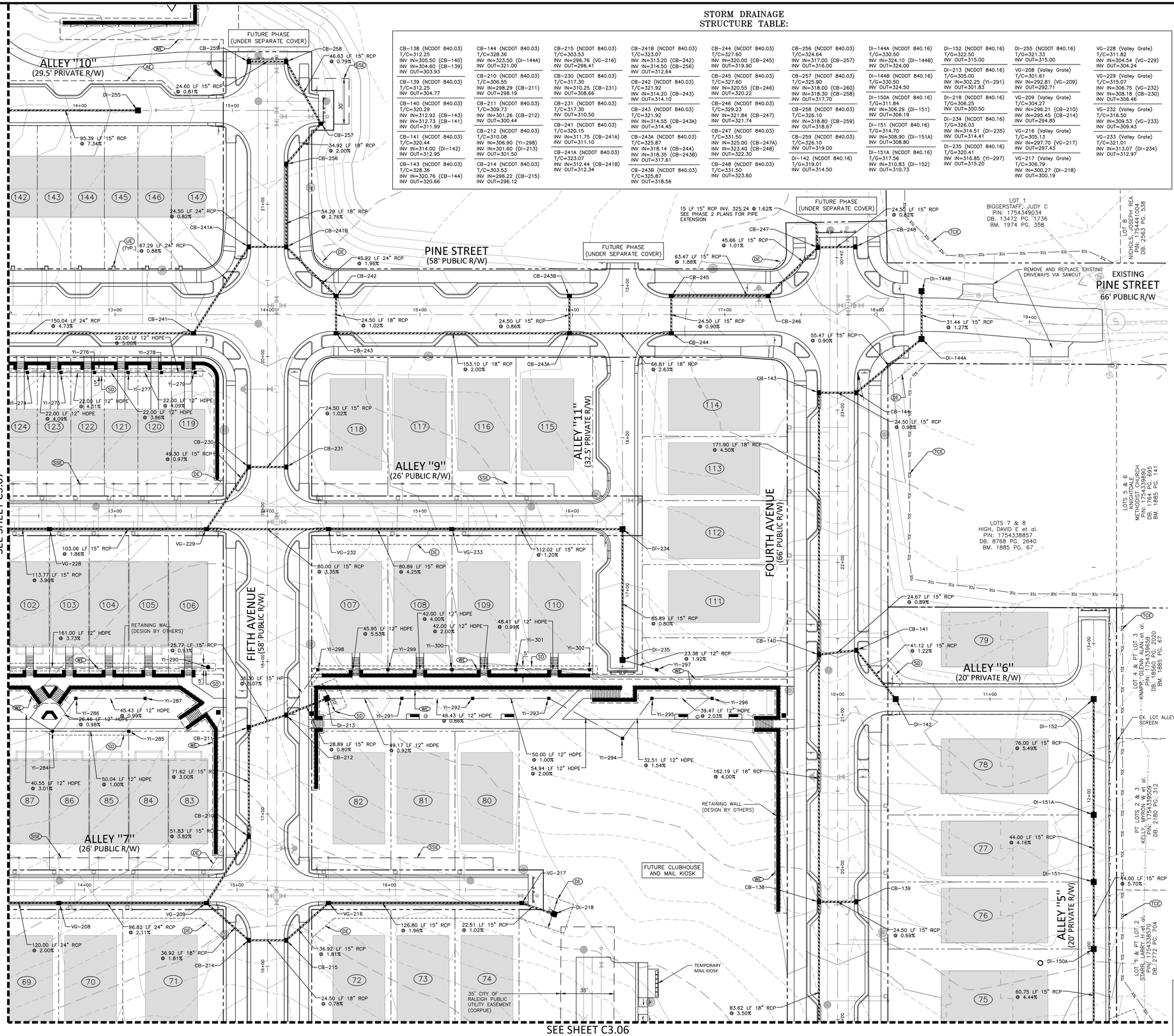

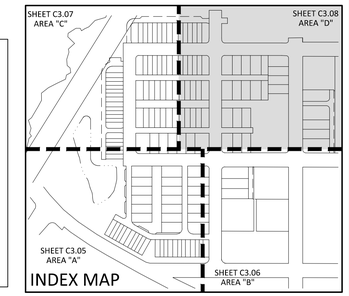

DRAINAGE LEGEND

- FLARED END SECTION
- ENDWALL SECTION
- CATCH BASIN
- DROP INLET
- STORM SERVICE INLET
- STORM SERVICE ROOF-DRAIN
- JUNCTION BOX
- STORM DRAINAGE
- STORM SERVICE LINE
- TCE — TEMPORARY CONSTRUCTION EASEMENT

EASEMENT LEGEND

- DE — PUBLIC STORM DRAINAGE EASEMENT
- SD — PRIVATE STORM DRAINAGE EASEMENT
- UE — CITY OF RALEIGH WATERLINE EASEMENT
- SSE — CITY OF RALEIGH SANITARY SEWER EASEMENT
- AE — PUBLIC ACCESS EASEMENT
- SB — SETBACKS
- WL — RETAINING WALL EASEMENT
- TCE — TEMPORARY CONSTRUCTION EASEMENT

GRAPHIC SCALE
0 15 30 60
1 inch = 30 ft.

NOTES:

1. WHERE DRAINAGE STRUCTURES ARE SHOWN WITHIN A LABELED STREET OR ALLEY, THE RIGHT OF WAY OR ACCESS EASEMENT MAY ACT AS THE DRAINAGE EASEMENT.
2. YARD INLET INFORMATION CAN BE FOUND ON STORM DETAIL SHEET C8.02

Town Certification. This design has been reviewed by the Engineer for the Town of Knightdale, and to the best of my knowledge and belief, it conforms to the requirements established in the Standard Specifications of the Town of Knightdale.
By: _____ Date: _____
Town Engineer
These plans are approved by the Town of Knightdale and serve as construction plans for this project.
By: _____ Date: _____
Administrator

FINAL DRAWING - RELEASED FOR CONSTRUCTION

MCADAMS
The John R. McAdams Company, Inc.
2905 Meridian Parkway
Durham, NC 27713
phone 919. 361. 5000
fax 919. 361. 2269
license number: C-0293, C-187
www.mcadamsco.com

CLIENT

ALLIANCE GROUP OF NC, LLC
7208 FALLS OF NEUSE RD, SUITE 101
RALEIGH, NORTH CAROLINA 27615
JACOB ANDERSON
PHONE: 919. 239. 9486

AGNC

DOWNTOWN NORTH AT KNIGHTDALE STATION
CONSTRUCTION DRAWINGS - PHASE 1
N SMITHFIELD ROAD
KNIGHTDALE, NORTH CAROLINA

NORTH CAROLINA PROFESSIONAL SEAL 051536 ENGINEER TYLER E. PRIDGEN

REVISIONS

NO.	DATE	
1	----	----
2	----	----
3	----	----
4	----	----
5	----	----
6	----	----

PLAN INFORMATION

PROJECT NO.	AGN-21002
FILENAME	AGN21002-G2
CHECKED BY	JCM / TEP
DRAWN BY	MRC / LRS / RAD
SCALE	1" = 30'
DATE	02. 16. 2024

SHEET

STORM DRAINAGE PLAN - AREA "D"

C3.08

M:\Projects\AGN\AGN21002\04-Production\Engineering\Current Drawings\Construction Drawings Sets\Phase-1\AGN21002-G2.dwg, 2/19/2024 2:14:21 PM, Megan Clifford

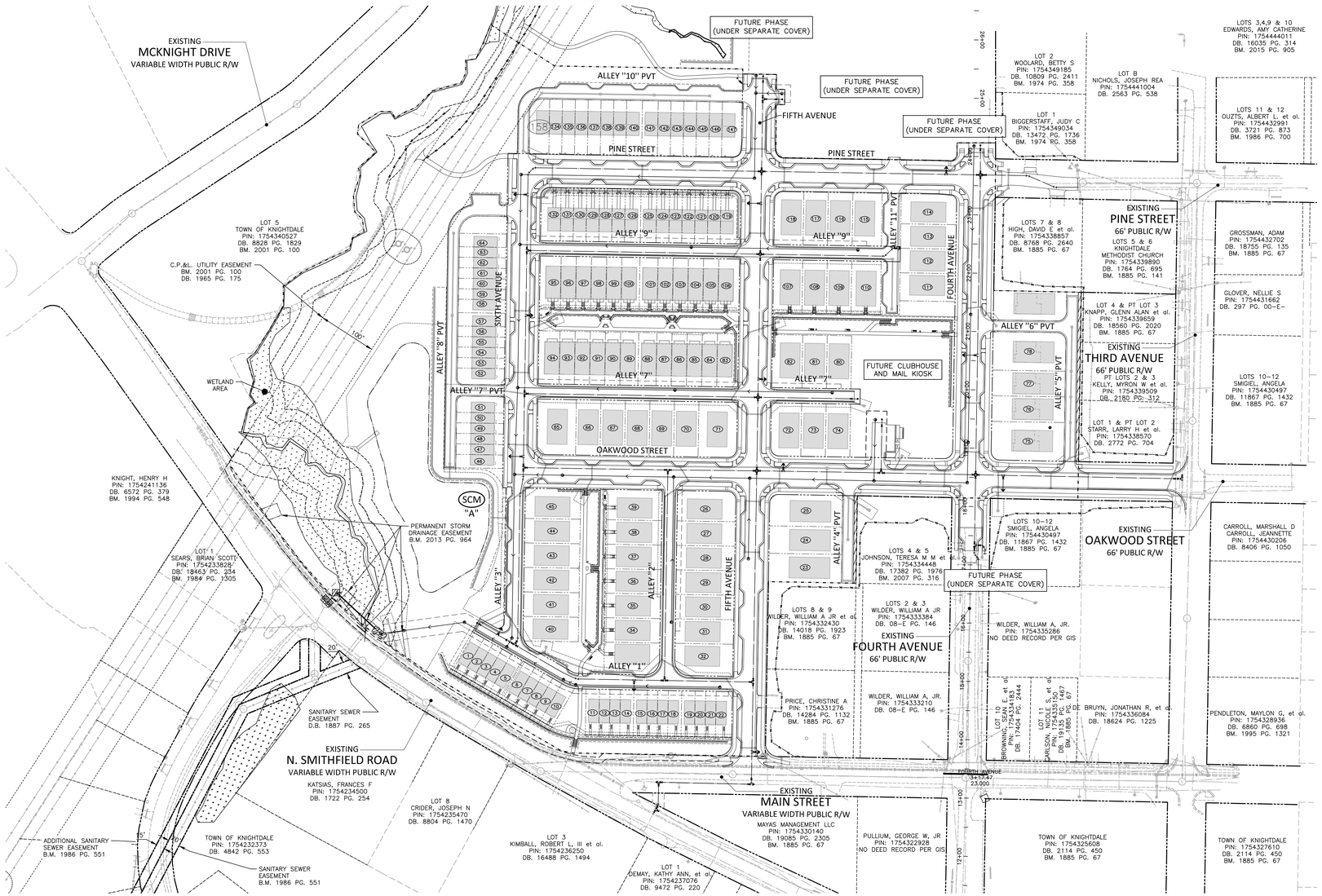

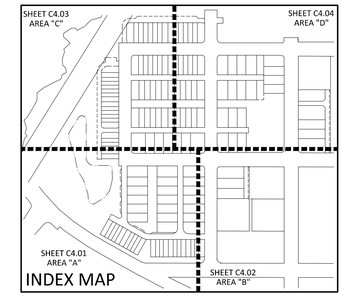

GRAPHIC SCALE
0 50 100 200
1 inch = 100 ft.

LEGEND

SCM STORMWATER CONTROL MEASURE

CITY OF RALEIGH – PLANS AUTHORIZED FOR CONSTRUCTION

Plans for the proposed use have been reviewed for general compliance with applicable codes. This limited review, and authorization for construction is not to be considered to represent total compliance with all legal requirements for development and construction. The property owner, design consultants, and contractors are each responsible for compliance with all applicable City, State and Federal laws. This specific authorization below is not a permit, nor shall it be construed to permit any violation of City, State or Federal Law. All Construction must be in accordance with all Local, State, and Federal Rules and Regulations.

Electronic Approval: This approval is being issued electronically. This approval is valid only upon the signature of a City of Raleigh Review Officer below. The City will retain a copy of the approved plans. Any work authorized by this approval must proceed in accordance with the plans kept on file with the City. This electronic approval may not be edited once issued. Any modification to this approval once issued will invalidate this approval.

City of Raleigh Development Approval _____
City of Raleigh Review Officer

SITE PERMITTING APPROVAL

Water and Sewer Permits (If applicable)

The City of Raleigh consents to the connection and extension of the City's Public Sewer System as shown on this plan. The material and Construction methods used for this project shall conform to the standards and specifications of the City's Public Utilities Handbook. City of Raleigh Public Utilities Department Permit # S-5378

The City of Raleigh consents to the connection and extension of the City's Public Water System as shown on this plan. The material and Construction methods used for this project shall conform to the standards and specifications of the City's Public Utilities Handbook. City of Raleigh Public Utilities Department Permit # W-4073

The City of Raleigh consents to the connection to its public sewer system and extension of the private sewer collection system as shown on this plan. The material and constructions methods used for this project shall conform to the standards and specifications of the City's Public Utilities Handbook.
City of Raleigh Public Utilities Department Permit # _____

SEE SHEET C0.01 FOR ALL PROJECT, SITE, GRADING, STORM DRAINAGE AND UTILITY NOTES

ALL CONSTRUCTION SHALL BE IN ACCORDANCE WITH THE CURRENT TOWN OF KNIGHTDALE, CITY OF RALEIGH PUBLIC UTILITIES, AND NCDOT (WHERE APPLICABLE) ENGINEERING DESIGN AND CONSTRUCTION STANDARDS

Town Certification. This design has been reviewed by the Engineer for the Town of Knightdale, and to the best of my knowledge and belief, it conforms to the requirements established in the Standard Specifications of the Town of Knightdale.
By: _____ Date: _____
Town Engineer
These plans are approved by the Town of Knightdale and serve as construction plans for this project.
By: _____ Date: _____
Administrator

FINAL DRAWING - RELEASED FOR CONSTRUCTION

MCADAMS
The John R. McAdams Company, Inc.
2905 Meridian Parkway
Durham, NC 27713

phone 919. 361. 5000
fax 919. 361. 2269
license number: C-0293, C-187

www.mcadamsco.com

CLIENT

ALLIANCE GROUP OF NC, LLC
7208 FALLS OF NEUSE RD, SUITE 101
RALEIGH, NORTH CAROLINA 27615
JACOB ANDERSON
PHONE: 919. 239. 9486

AGNC

DOWNTOWN NORTH AT KNIGHTDALE STATION
CONSTRUCTION DRAWINGS - PHASE 1
N SMITHFIELD ROAD
KNIGHTDALE, NORTH CAROLINA

NORTH CAROLINA PROFESSIONAL SEAL 051536 ENGINEER TYLER E. PROEST

REVISIONS

NO.	DATE	
1	----	----
2	----	----
3	----	----
4	----	----
5	----	----
6	----	----

PLAN INFORMATION

PROJECT NO.	AGN-21002
FILENAME	AGN21002-OAU1
CHECKED BY	JCM / TEP
DRAWN BY	MRC / LRS / RAD
SCALE	1" = 100'
DATE	02. 16. 2024

SHEET

OVERALL UTILITY PLAN

C4.00

M:\Projects\AGN\AGN21002\04-Production\Engineering\Current Drawings\Construction Drawings Sets\Phase-1\AGN21002-OAU1.dwg, 2/16/2024 6:38:54 PM, Megan Clifford

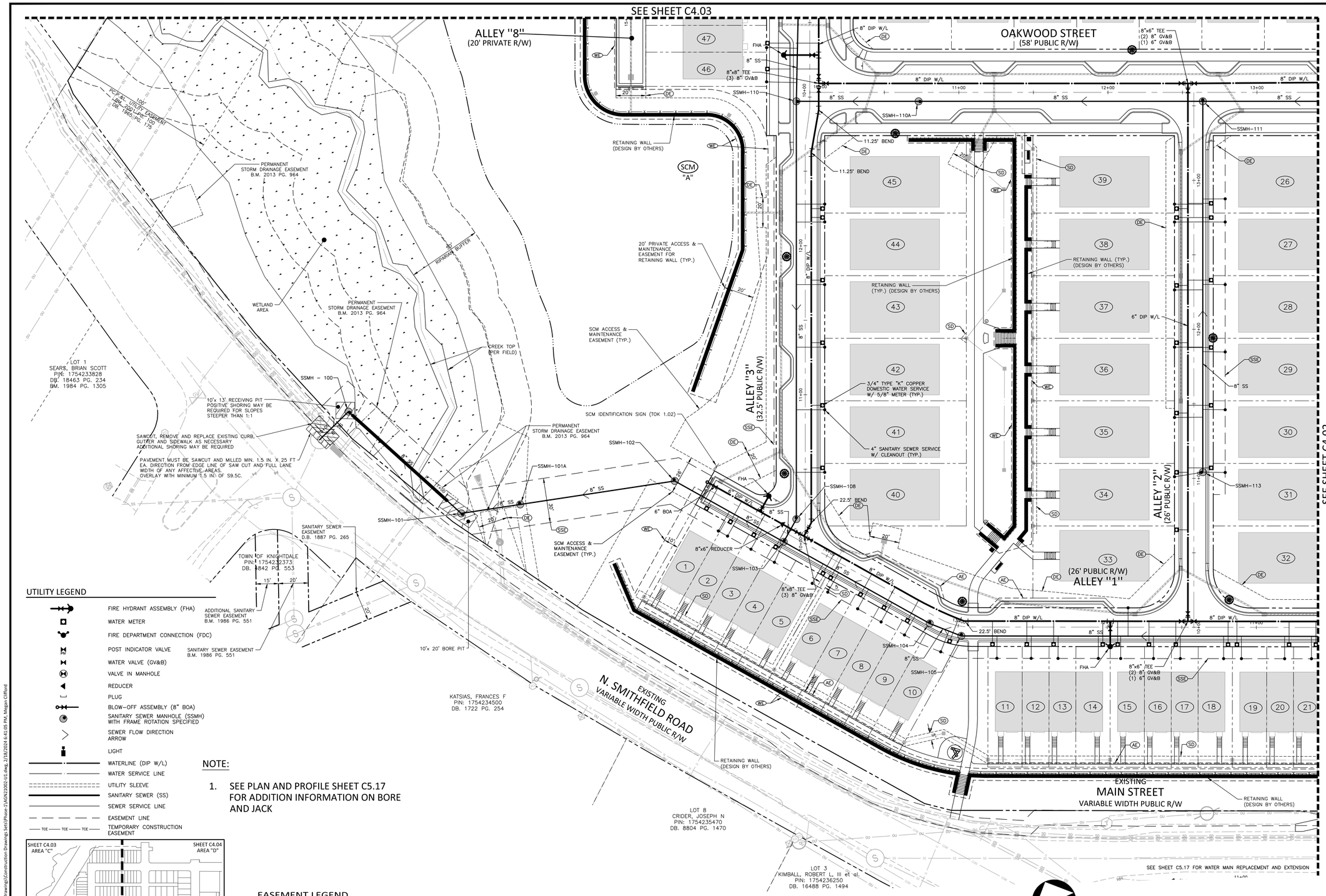

UTILITY LEGEND

- FIRE HYDRANT ASSEMBLY (FHA)
- WATER METER
- FIRE DEPARTMENT CONNECTION (FDC)
- POST INDICATOR VALVE
- WATER VALVE (GV&B)
- VALVE IN MANHOLE
- REDUCER
- PLUG
- BLOW-OFF ASSEMBLY (8" BOA)
- SANITARY SEWER MANHOLE (SSMH) WITH FRAME ROTATION SPECIFIED
- SEWER FLOW DIRECTION ARROW
- LIGHT
- WATERLINE (DIP W/L)
- WATER SERVICE LINE
- UTILITY SLEEVE
- SANITARY SEWER (SS)
- SEWER SERVICE LINE
- EASEMENT LINE
- TEMPORARY CONSTRUCTION EASEMENT

NOTE:

1. SEE PLAN AND PROFILE SHEET C5.17 FOR ADDITION INFORMATION ON BORE AND JACK

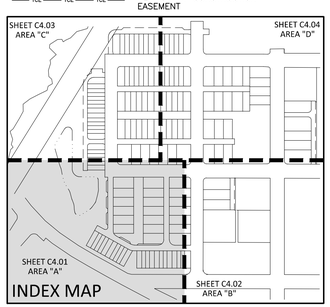

EASEMENT LEGEND

- (DE) PUBLIC STORM DRAINAGE EASEMENT
- (SD) PRIVATE STORM DRAINAGE EASEMENT
- (UE) CITY OF RALEIGH WATERLINE EASEMENT
- (SSE) CITY OF RALEIGH SANITARY SEWER EASEMENT
- (AE) PUBLIC ACCESS EASEMENT
- (SB) SETBACKS
- (WE) RETAINING WALL EASEMENT
- (TCE) TEMPORARY CONSTRUCTION EASEMENT

LEGEND

- (SCM) STORMWATER CONTROL MEASURE

CITY OF RALEIGH – PLANS AUTHORIZED FOR CONSTRUCTION

Plans for the proposed use have been reviewed for general compliance with applicable codes. This limited review, and authorization for construction is not to be considered to represent total compliance with all legal requirements for development and construction. The property owner, design consultants, and contractors are each responsible for compliance with all applicable City, State and Federal laws. This specific authorization below is not a permit, nor shall it be construed to permit any violation of City, State or Federal Law. All Construction must be in accordance with all Local, State, and Federal Rules and Regulations.

Electronic Approval: This approval is being issued electronically. This approval is valid only upon the signature of a City of Raleigh Review Officer below. The City will retain a copy of the approved plans. Any work authorized by this approval must proceed in accordance with the plans kept on file with the City. This electronic approval may not be edited once issued. Any modification to this approval once issued will invalidate this approval.

City of Raleigh Development Approval _____

City of Raleigh Review Officer

SITE PERMITTING APPROVAL

Water and Sewer Permits (if applicable)

The City of Raleigh consents to the construction and extension of the City's Public Sewer System as shown on this plan. The material and Construction methods used for this project shall conform to the standards and specifications of the City's Public Utilities Handbook.

City of Raleigh Public Utilities Department Permit # 3576

The City of Raleigh consents to the construction and extension of the City's Public Water System as shown on this plan. The material and Construction methods used for this project shall conform to the standards and specifications of the City's Public Utilities Handbook.

City of Raleigh Public Utilities Department Permit # 4078

The City of Raleigh consents to the construction and extension of the private water system and extension of the private sewer collection system as shown on this plan. The material and constructions methods used for this project shall conform to the standards and specifications of the City's Public Utilities Handbook, its public sewer system and extension of the private sewer collection

City of Raleigh Public Utilities Department Permit # of constructions methods used for this project shall conform to the standards and specifications of the City's Public Utilities Handbook.

City of Raleigh Public Utilities Department Permit # _____

GRAPHIC SCALE

0 15 30 60

1 inch = 30 ft.

SEE SHEET C0.01 FOR ALL PROJECT, SITE, GRADING, STORM DRAINAGE AND UTILITY NOTES

ALL CONSTRUCTION SHALL BE IN ACCORDANCE WITH THE CURRENT TOWN OF KNIGHTDALE, CITY OF RALEIGH PUBLIC UTILITIES, AND NCDOT (WHERE APPLICABLE) ENGINEERING DESIGN AND CONSTRUCTION STANDARDS

Town Certification. This design has been reviewed by the Engineer for the Town of Knightdale, and to the best of my knowledge and belief, it conforms to the requirements established in the Standard Specifications of the Town of Knightdale.
By: _____ Date: _____
Town Engineer
These plans are approved by the Town of Knightdale and serve as construction plans for this project.
By: _____ Date: _____
Administrator

FINAL DRAWING - RELEASED FOR CONSTRUCTION

MCADAMS
The John R. McAdams Company, Inc.
2905 Meridian Parkway
Durham, NC 27713

phone 919. 361. 5000
fax 919. 361. 2269
license number: C-0293, C-187

www.mcadamsco.com

CLIENT

ALLIANCE GROUP OF NC, LLC
7208 FALLS OF NEUSE RD, SUITE 101
RALEIGH, NORTH CAROLINA 27615
JACOB ANDERSON
PHONE: 919. 239. 9486

AGNC

DOWNTOWN NORTH AT KNIGHTDALE STATION
CONSTRUCTION DRAWINGS - PHASE 1
N SMITHFIELD ROAD
KNIGHTDALE, NORTH CAROLINA

NORTH CAROLINA PROFESSIONAL SEAL 051536 ENGINEER TYLER E. PROBST

REVISIONS

NO.	DATE	
1	----	----
2	----	----
3	----	----
4	----	----
5	----	----
6	----	----

PLAN INFORMATION

PROJECT NO.	AGN-21002
FILENAME	AGN21002-U1
CHECKED BY	JCM / TEP
DRAWN BY	MRC / LRS / RAD
SCALE	1" = 30'
DATE	02. 16. 2024

SHEET

UTILITY PLAN - AREA "A"

C4.01

M:\Projects\AGN\AGN21002\04-Production\Engineering\Current Drawings\Construction Drawings Sets\Phase-1\AGN21002-U1.dwg, 2/18/2024 6:41:05 PM, Megan Clifford

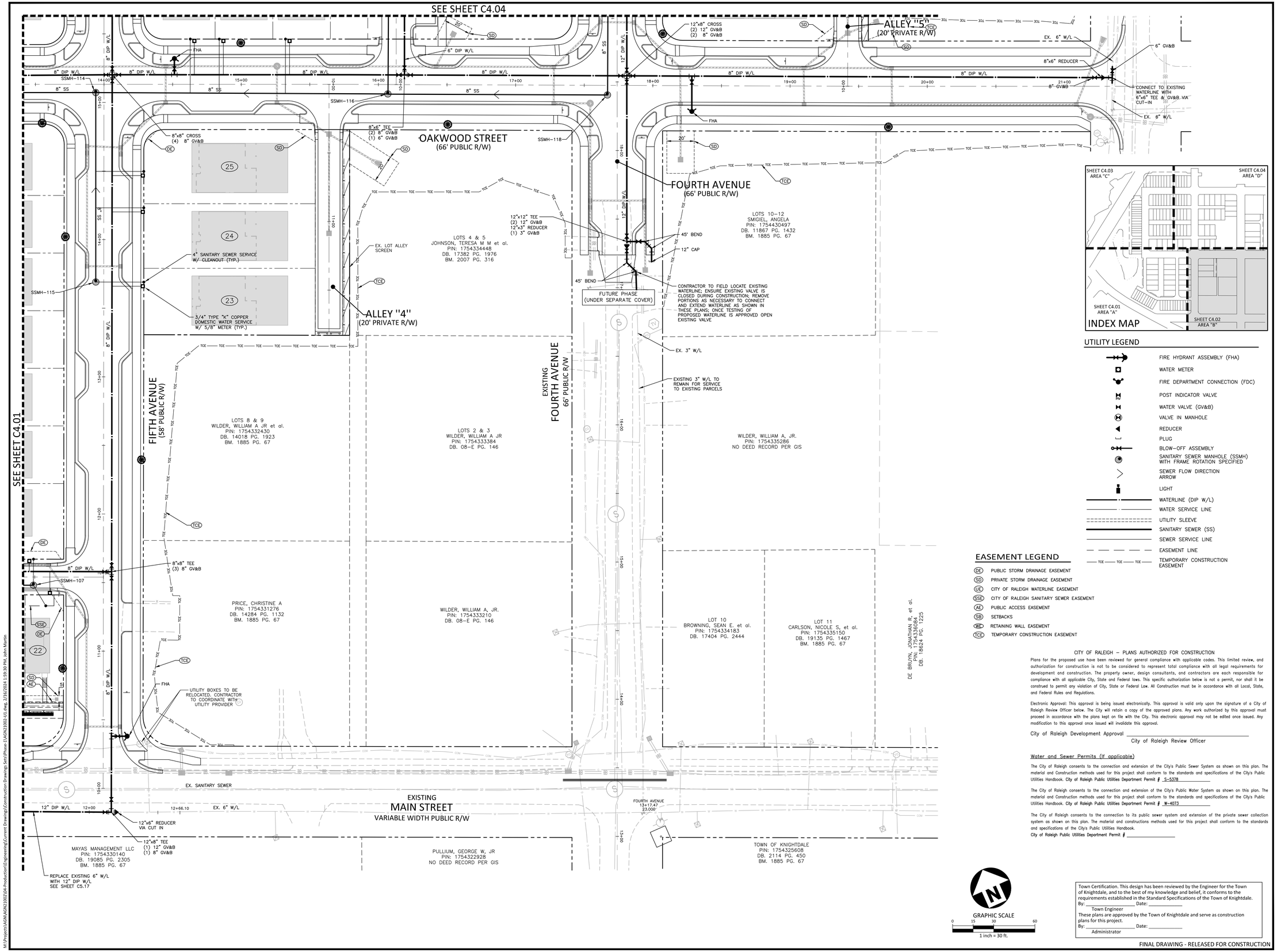

UTILITY LEGEND

- FIRE HYDRANT ASSEMBLY (FHA)
- WATER METER
- FIRE DEPARTMENT CONNECTION (FDC)
- POST INDICATOR VALVE
- WATER VALVE (GV&B)
- VALVE IN MANHOLE
- REDUCER
- PLUG
- BLOW–OFF ASSEMBLY
- SANITARY SEWER MANHOLE (SSMH) WITH FRAME ROTATION SPECIFIED
- SEWER FLOW DIRECTION ARROW
- LIGHT
- WATERLINE (DIP W/L)
- WATER SERVICE LINE
- UTILITY SLEEVE
- SANITARY SEWER (SS)
- SEWER SERVICE LINE
- EASEMENT LINE
- TCE — TCE — TCE — TEMPORARY CONSTRUCTION EASEMENT

EASEMENT LEGEND

- DE — PUBLIC STORM DRAINAGE EASEMENT
- SD — PRIVATE STORM DRAINAGE EASEMENT
- UE — CITY OF RALEIGH WATERLINE EASEMENT
- SSE — CITY OF RALEIGH SANITARY SEWER EASEMENT
- AE — PUBLIC ACCESS EASEMENT
- SB — SETBACKS
- WE — RETAINING WALL EASEMENT
- TCE — TEMPORARY CONSTRUCTION EASEMENT

CITY OF RALEIGH – PLANS AUTHORIZED FOR CONSTRUCTION

Plans for the proposed use have been reviewed for general compliance with applicable codes. This limited review, and authorization for construction is not to be considered to represent total compliance with all legal requirements for development and construction. The property owner, design consultants, and contractors are each responsible for compliance with all applicable City, State and Federal laws. This specific authorization below is not a permit, nor shall it be construed to permit any violation of City, State or Federal Law. All Construction must be in accordance with all Local, State, and Federal Rules and Regulations.

Electronic Approval: This approval is being issued electronically. This approval is valid only upon the signature of a City of Raleigh Review Officer below. The City will retain a copy of the approved plans. Any work authorized by this approval must proceed in accordance with the plans kept on file with the City. This electronic approval may not be edited once issued. Any modification to this approval once issued will invalidate this approval.

City of Raleigh Development Approval _____
City of Raleigh Review Officer

Water and Sewer Permits (If applicable)

The City of Raleigh consents to the connection and extension of the City's Public Sewer System as shown on this plan. The material and Construction methods used for this project shall conform to the standards and specifications of the City's Public Utilities Handbook. City of Raleigh Public Utilities Department Permit # S–5378

The City of Raleigh consents to the connection and extension of the City's Public Water System as shown on this plan. The material and Construction methods used for this project shall conform to the standards and specifications of the City's Public Utilities Handbook. City of Raleigh Public Utilities Department Permit # W–4073

The City of Raleigh consents to the connection to its public sewer system and extension of the private sewer collection system as shown on this plan. The material and constructions methods used for this project shall conform to the standards and specifications of the City's Public Utilities Handbook.
City of Raleigh Public Utilities Department Permit # _____

GRAPHIC SCALE
0 15 30 60
1 inch = 30 ft.

Town Certification. This design has been reviewed by the Engineer for the Town of Knightdale, and to the best of my knowledge and belief, it conforms to the requirements established in the Standard Specifications of the Town of Knightdale.
By: _____ Date: _____
Town Engineer
These plans are approved by the Town of Knightdale and serve as construction plans for this project.
By: _____ Date: _____
Administrator

FINAL DRAWING - RELEASED FOR CONSTRUCTION

McADAMS
The John R. McAdams Company, Inc.
2905 Meridian Parkway
Durham, NC 27713

phone 919. 361. 5000
fax 919. 361. 2269
license number: C-0293, C-187

www.mcadamsco.com

CLIENT

ALLIANCE GROUP OF NC, LLC
7208 FALLS OF NEUSE RD, SUITE 101
RALEIGH, NORTH CAROLINA 27615
JACOB ANDERSON
PHONE: 919. 239. 9486

AGNC

DOWNTOWN NORTH AT KNIGHTDALE STATION
CONSTRUCTION DRAWINGS - PHASE 1
N SMITHFIELD ROAD
KNIGHTDALE, NORTH CAROLINA

NORTH CAROLINA PROFESSIONAL SEAL 051536 ENGINEER TYLER E. PROBST

REVISIONS

NO.	DATE	
1	----	----
2	----	----
3	----	----
4	----	----
5	----	----
6	----	----

PLAN INFORMATION

PROJECT NO.	AGN-21002
FILENAME	AGN21002-U1
CHECKED BY	JCM / TEP
DRAWN BY	MRC / LRS / RAD
SCALE	1" = 30'
DATE	02. 16. 2024

SHEET

UTILITY PLAN - AREA "B"

C4.02

M:\Projects\AGN\AGN21002\04-Production\Engineering\Current Drawings\Construction Drawings Sets\Phase-1\AGN21002-U1.dwg, 2/16/2024 1:59:30 PM, John Martin

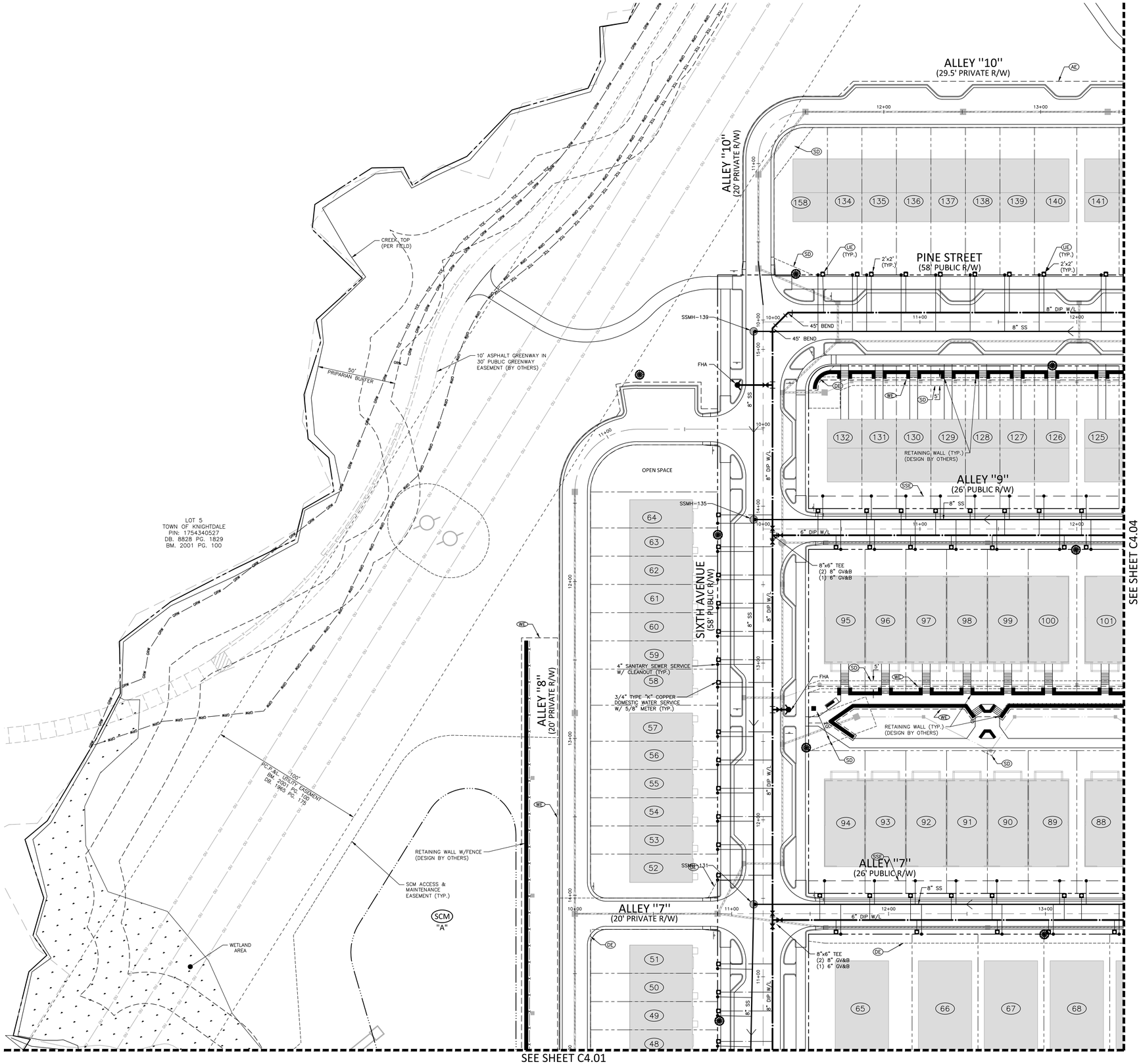

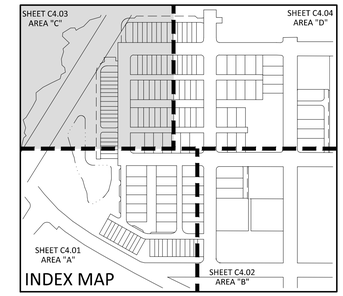

UTILITY LEGEND

- FIRE HYDRANT ASSEMBLY (FHA)
- WATER METER
- FIRE DEPARTMENT CONNECTION (FDC)
- POST INDICATOR VALVE
- WATER VALVE (GV&B)
- VALVE IN MANHOLE
- REDUCER
- PLUG
- BLOW-OFF ASSEMBLY
- SANITARY SEWER MANHOLE (SSMH) WITH FRAME ROTATION SPECIFIED
- SEWER FLOW DIRECTION ARROW
- LIGHT
- WATERLINE (DIP W/L)
- WATER SERVICE LINE
- UTILITY SLEEVE
- SANITARY SEWER (SS)
- SEWER SERVICE LINE
- EASEMENT LINE
- TCE — TCE — TCE — TEMPORARY CONSTRUCTION EASEMENT

EASEMENT LEGEND

- DE — PUBLIC STORM DRAINAGE EASEMENT
- SD — PRIVATE STORM DRAINAGE EASEMENT
- UE — CITY OF RALEIGH WATERLINE EASEMENT
- SSE — CITY OF RALEIGH SANITARY SEWER EASEMENT
- AE — PUBLIC ACCESS EASEMENT
- SB — SETBACKS
- WE — RETAINING WALL EASEMENT
- TCE — TEMPORARY CONSTRUCTION EASEMENT

LEGEND

- SCM — STORMWATER CONTROL MEASURE

GRAPHIC SCALE
0 15 30 60
1 inch = 30 ft.

CITY OF RALEIGH – PLANS AUTHORIZED FOR CONSTRUCTION

Plans for the proposed use have been reviewed for general compliance with applicable codes. This limited review, and authorization for construction is not to be considered to represent total compliance with all legal requirements for development and construction. The property owner, design consultants, and contractors are each responsible for compliance with all applicable City, State and Federal laws. This specific authorization below is not a permit, nor shall it be construed to permit any violation of City, State or Federal Law. All Construction must be in accordance with all Local, State, and Federal Rules and Regulations.

Electronic Approval: This approval is being issued electronically. This approval is valid only upon the signature of a City of Raleigh Review Officer below. The City will retain a copy of the approved plans. Any work authorized by this approval must proceed in accordance with the plans kept on file with the City. This electronic approval may not be edited once issued. Any modification to this approval once issued will invalidate this approval.

City of Raleigh Development Approval _____
City of Raleigh Review Officer

Water and Sewer Permits (If applicable)

The City of Raleigh consents to the connection and extension of the City's Public Sewer System as shown on this plan. The material and Construction methods used for this project shall conform to the standards and specifications of the City's Public Utilities Handbook. City of Raleigh Public Utilities Department Permit # S-5378

The City of Raleigh consents to the connection and extension of the City's Public Water System as shown on this plan. The material and Construction methods used for this project shall conform to the standards and specifications of the City's Public Utilities Handbook. City of Raleigh Public Utilities Department Permit # W-4073

The City of Raleigh consents to the connection to its public sewer system and extension of the private sewer collection system as shown on this plan. The material and constructions methods used for this project shall conform to the standards and specifications of the City's Public Utilities Handbook.
City of Raleigh Public Utilities Department Permit # _____

Town Certification. This design has been reviewed by the Engineer for the Town of Knightdale, and to the best of my knowledge and belief, it conforms to the requirements established in the Standard Specifications of the Town of Knightdale.
By: _____ Date: _____
Town Engineer
These plans are approved by the Town of Knightdale and serve as construction plans for this project.
By: _____ Date: _____
Administrator

FINAL DRAWING - RELEASED FOR CONSTRUCTION

MCADAMS
The John R. McAdams Company, Inc.
2905 Meridian Parkway
Durham, NC 27713

phone 919. 361. 5000
fax 919. 361. 2269
license number: C-0293, C-187

www.mcadamsco.com

CLIENT

ALLIANCE GROUP OF NC, LLC
7208 FALLS OF NEUSE RD, SUITE 101
RALEIGH, NORTH CAROLINA 27615
JACOB ANDERSON
PHONE: 919. 239. 9486

AGNC

DOWNTOWN NORTH AT KNIGHTDALE STATION
CONSTRUCTION DRAWINGS - PHASE 1
N SMITHFIELD ROAD
KNIGHTDALE, NORTH CAROLINA

NORTH CAROLINA PROFESSIONAL SEAL 051536 ENGINEER TYLER E. PROBST

REVISIONS

NO.	DATE	
1	----	----
2	----	----
3	----	----
4	----	----
5	----	----
6	----	----

PLAN INFORMATION

PROJECT NO.	AGN-21002
FILENAME	AGN21002-U1
CHECKED BY	JCM / TEP
DRAWN BY	MRC / LRS / RAD
SCALE	1" = 30'
DATE	02. 16. 2024

SHEET

UTILITY PLAN - AREA "C"

C4.03

M:\Projects\AGN\AGN21002\04-Production\Engineering\Current Drawings\Construction Drawings Sets\Phase-1\AGN21002-U1.dwg, 2/19/2024 10:42:18 AM, Megan Clifford

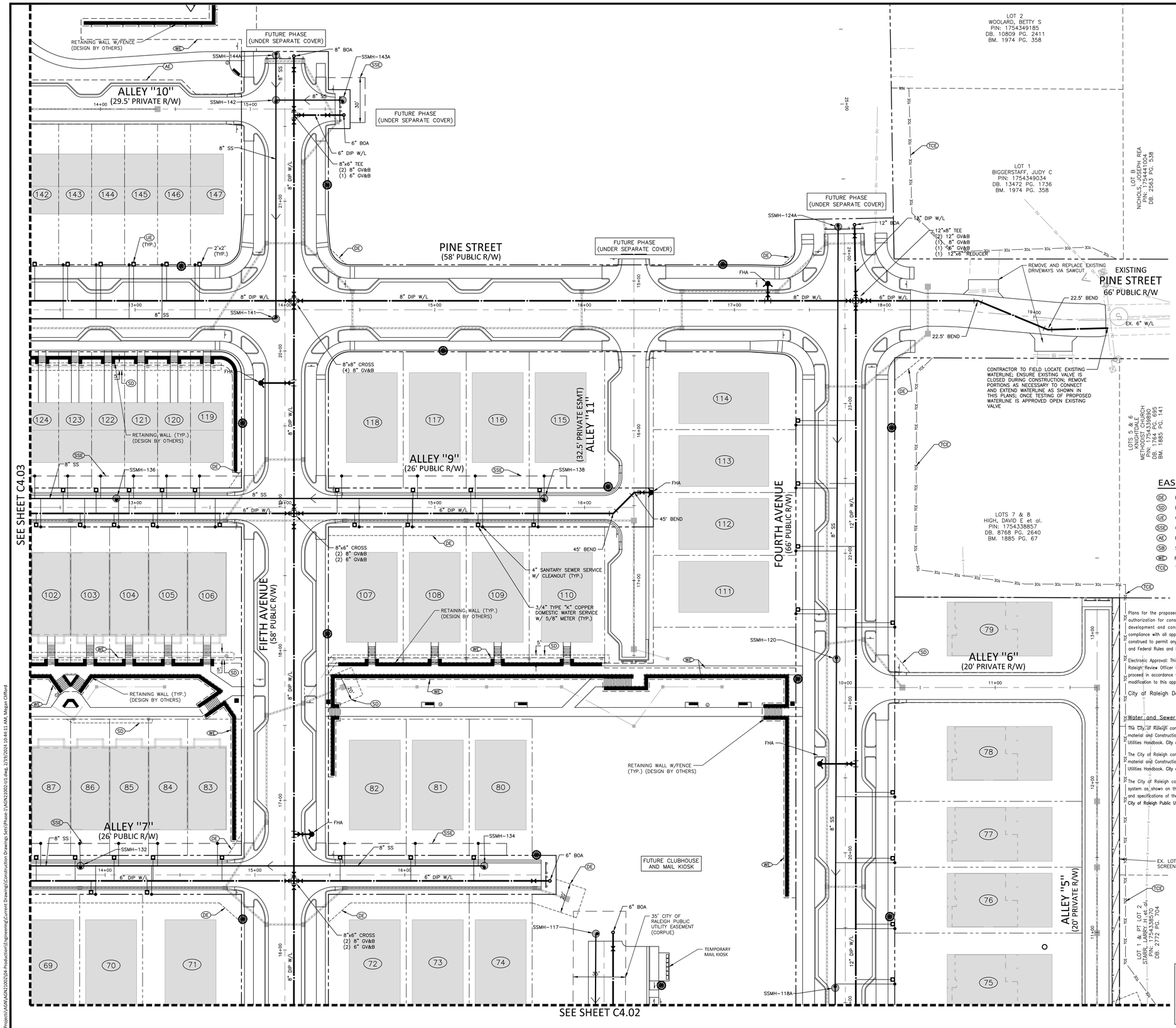

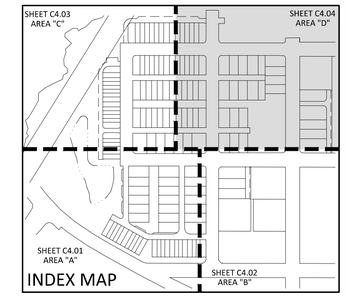

UTILITY LEGEND

- FIRE HYDRANT ASSEMBLY (FHA)
- WATER METER
- FIRE DEPARTMENT CONNECTION (FDC)
- POST INDICATOR VALVE
- WATER VALVE (GV&B)
- VALVE IN MANHOLE
- REDUCER
- PLUG
- BLOW-OFF ASSEMBLY
- SANITARY SEWER MANHOLE (SSMH) WITH FRAME ROTATION SPECIFIED
- SEWER FLOW DIRECTION ARROW
- LIGHT
- WATERLINE (DIP W/L)
- WATER SERVICE LINE
- UTILITY SLEEVE
- SANITARY SEWER (SS)
- SEWER SERVICE LINE
- EASEMENT LINE
- TCE — TCE — TCE — TEMPORARY CONSTRUCTION EASEMENT

EASEMENT LEGEND

- (DE) PUBLIC STORM DRAINAGE EASEMENT
- (SD) PRIVATE STORM DRAINAGE EASEMENT
- (UE) CITY OF RALEIGH WATERLINE EASEMENT
- (SSE) CITY OF RALEIGH SANITARY SEWER EASEMENT
- (AE) PUBLIC ACCESS EASEMENT
- (SB) SETBACKS
- (WE) RETAINING WALL EASEMENT
- (TCE) TEMPORARY CONSTRUCTION EASEMENT

GRAPHIC SCALE
0 15 30 60
1 inch = 30 ft.

CITY OF RALEIGH – PLANS AUTHORIZED FOR CONSTRUCTION

Plans for the proposed use have been reviewed for general compliance with applicable codes. This limited review, and authorization for construction is not to be considered to represent total compliance with all legal requirements for development and construction. The property owner, design consultants, and contractors are each responsible for compliance with all applicable City, State and Federal laws. This specific authorization below is not a permit, nor shall it be construed to permit any violation of City, State or Federal Law. All Construction must be in accordance with all Local, State, and Federal Rules and Regulations.

Electronic Approval: This approval is being issued electronically. This approval is valid only upon the signature of a City of Raleigh Review Officer below. The City will retain a copy of the approved plans. Any work authorized by this approval must proceed in accordance with the plans kept on file with the City. This electronic approval may not be edited once issued. Any modification to this approval once issued will invalidate this approval.

City of Raleigh Development Approval _____
City of Raleigh Review Officer

Water and Sewer Permits (If applicable)

This City of Raleigh consents to the connection and extension of the City's Public Sewer System as shown on this plan. The material and Construction methods used for this project shall conform to the standards and specifications of the City's Public Utilities Handbook. City of Raleigh Public Utilities Department Permit # S-5378

The City of Raleigh consents to the connection and extension of the City's Public Water System as shown on this plan. The material and Construction methods used for this project shall conform to the standards and specifications of the City's Public Utilities Handbook. City of Raleigh Public Utilities Department Permit # W-4073

The City of Raleigh consents to the connection to its public sewer system and extension of the private sewer collection system as shown on this plan. The material and constructions methods used for this project shall conform to the standards and specifications of the City's Public Utilities Handbook.
City of Raleigh Public Utilities Department Permit # _____

Town Certification. This design has been reviewed by the Engineer for the Town of Knightdale, and to the best of my knowledge and belief, it conforms to the requirements established in the Standard Specifications of the Town of Knightdale.
By: _____ Date: _____
Town Engineer
These plans are approved by the Town of Knightdale and serve as construction plans for this project.
By: _____ Date: _____
Administrator

FINAL DRAWING - RELEASED FOR CONSTRUCTION

MCADAMS
The John R. McAdams Company, Inc.
2905 Meridian Parkway
Durham, NC 27713

phone 919. 361. 5000
fax 919. 361. 2269
license number: C-0293, C-187

www.mcadamsco.com

CLIENT

ALLIANCE GROUP OF NC, LLC
7208 FALLS OF NEUSE RD, SUITE 101
RALEIGH, NORTH CAROLINA 27615
JACOB ANDERSON
PHONE: 919. 239. 9486

AGNC

DOWNTOWN NORTH AT KNIGHTDALE STATION
CONSTRUCTION DRAWINGS - PHASE 1
N SMITHFIELD ROAD
KNIGHTDALE, NORTH CAROLINA

NORTH CAROLINA PROFESSIONAL SEAL 051536 ENGINEER TYLER E. PROBST

REVISIONS

NO.	DATE	
1	----	----
2	----	----
3	----	----
4	----	----
5	----	----
6	----	----

PLAN INFORMATION

PROJECT NO.	AGN-21002
FILENAME	AGN21002-U1
CHECKED BY	JCM / TEP
DRAWN BY	MRC / LRS / RAD
SCALE	1" = 30'
DATE	02. 16. 2024

SHEET

UTILITY PLAN - AREA "D"

C4.04

M:\Projects\AGN\AGN21002\04-Production\Engineering\Construction Drawings Sets\Phase-1\AGN21002-U1.dwg, 2/19/2024 10:44:11 AM, Megan Clifford

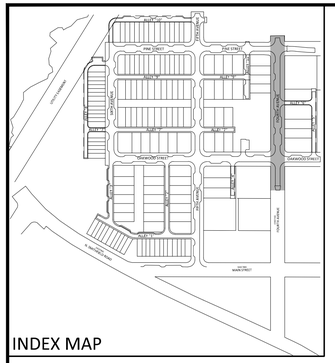

INDEX MAP

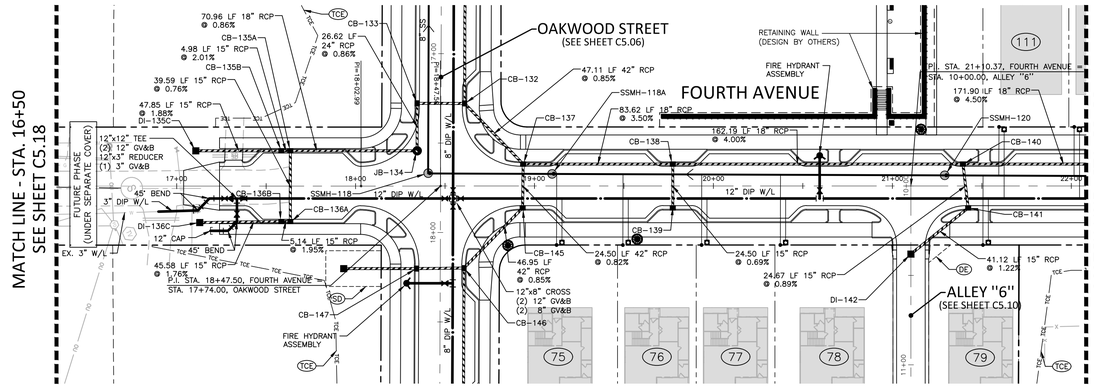

STORM DRAINAGE STRUCTURE TABLE:

CB-135A (NCDOT 840.03) STA 17+63.53 T/C=304.94 INV IN=299.10 (CB-136A) INV IN=299.40 (CB-135B) INV OUT=299.00	CB-139 (NCDOT 840.03) STA 19+77.28 T/C=312.25 INV OUT=304.77
CB-135B (NCDOT 840.03) STA 17+58.55 T/C=304.94 INV IN=299.60 (DI-135C) INV OUT=299.50	CB-140 (NCDOT 840.03) STA 21+39.47 T/C=320.29 INV IN=312.92 (CB-143) INV IN=312.73 (CB-141) INV OUT=311.99
CB-136A (NCDOT 840.03) STA 17+63.59 T/C=304.94 INV IN=299.50 (CB-136B) INV OUT=299.40	CB-141 (NCDOT 840.03) STA 21+42.37 T/C=320.44 INV IN=314.00 (DI-142) INV OUT=312.99
CB-136B (NCDOT 840.03) STA 17+58.46 T/C=304.94 INV IN=299.70 (DI-136C) INV OUT=299.60	CB-145 (NCDOT 840.03) STA 18+93.33 T/C=308.10 INV IN=296.70 (CB-146) INV OUT=296.60
CB-137 (NCDOT 840.03) STA 18+93.66 T/C=308.11 INV IN=301.00 (CB-138) INV IN=296.40 (CB-145) INV OUT=296.20	DI-135C (OPEN THROAT) STA 17+10.70 WEIR=302.75 INV OUT=300.50
CB-138 (NCDOT 840.03) STA 19+77.28 T/C=312.25 INV IN=305.50 (CB-140) INV IN=304.60 (CB-139) INV OUT=303.93	DI-136C (OPEN THROAT) STA 17+12.88 WEIR=302.75 INV OUT=300.50

EASEMENT LEGEND

- (DE) STORM DRAINAGE EASEMENT
- (UE) CITY OF RALEIGH WATERLINE EASEMENT
- (SSE) CITY OF RALEIGH SANITARY SEWER EASEMENT
- (AE) PUBLIC ACCESS EASEMENT

GRAPHIC SCALE
0 20 40 80
1 inch = 40 ft.

FOURTH AVENUE

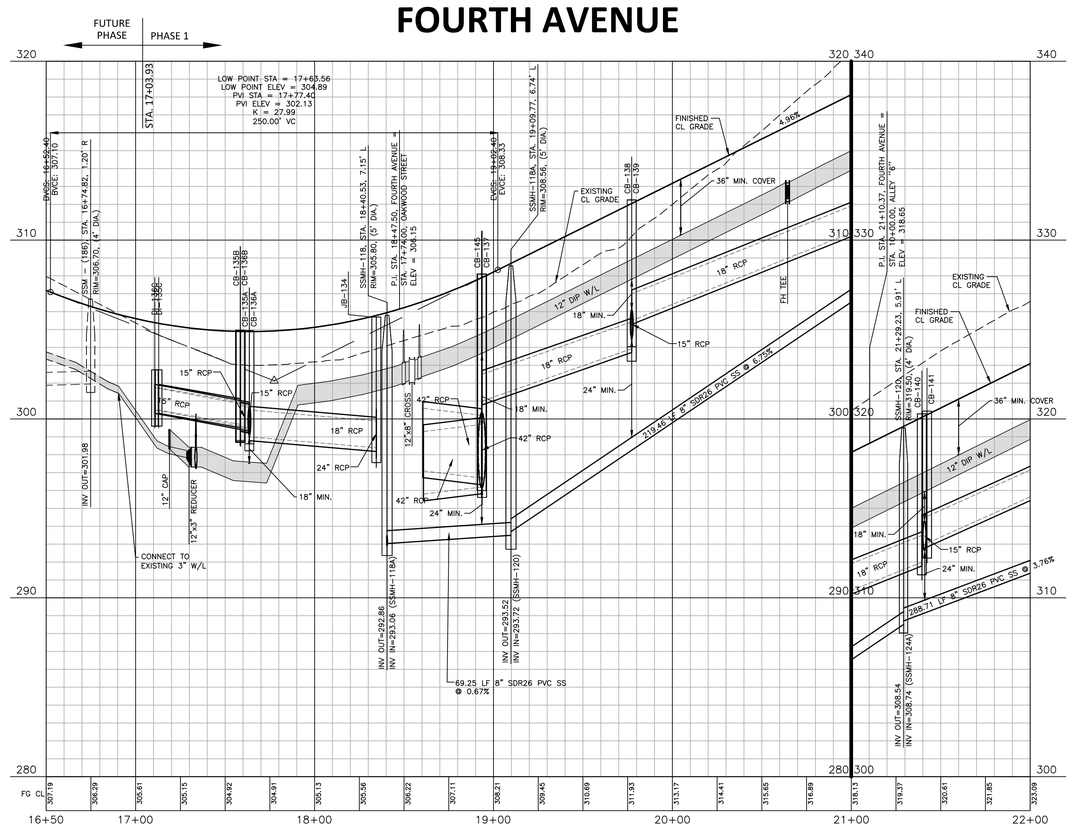

CITY OF RALEIGH – PLANS AUTHORIZED FOR CONSTRUCTION

Plans for the proposed use have been reviewed for general compliance with applicable codes. This limited review, and authorization for construction is not to be considered to represent total compliance with all legal requirements for development and construction. The property owner, design consultants, and contractors are each responsible for compliance with all applicable City, State and Federal laws. This specific authorization below is not a permit, nor shall it be construed to permit any violation of City, State or Federal Law. All Construction must be in accordance with all Local, State, and Federal Rules and Regulations.

Electronic Approval: This approval is being issued electronically. This approval is valid only upon the signature of a City of Raleigh Review Officer below. The City will retain a copy of the approved plans. Any work authorized by this approval must proceed in accordance with the plans kept on file with the City. This electronic approval may not be edited once issued. Any modification to this approval once issued will invalidate this approval.

City of Raleigh Development Approval _____
City of Raleigh Review Officer

SITE PERMITTING APPROVAL

Water and Sewer Permits (If applicable)

The City of Raleigh consents to the connection and extension of the City's Public Sewer System as shown on this plan. The material and Construction methods used for this project shall conform to the standards and specifications of the City's Public Utilities Handbook. City of Raleigh Public Utilities Department Permit # S-5378

The City of Raleigh consents to the connection and extension of the City's Public Water System as shown on this plan. The material and Construction methods used for this project shall conform to the standards and specifications of the City's Public Utilities Handbook. City of Raleigh Public Utilities Department Permit # W-4073

The City of Raleigh consents to the connection to its public sewer system and extension of the private sewer collection system as shown on this plan. The material and constructions methods used for this project shall conform to the standards and specifications of the City's Public Utilities Handbook.
City of Raleigh Public Utilities Department Permit # _____

SEE SHEET C0.01 FOR ALL PROJECT, SITE, GRADING, STORM DRAINAGE AND UTILITY NOTES

ALL CONSTRUCTION SHALL BE IN ACCORDANCE WITH THE CURRENT TOWN OF KNIGHTDALE, CITY OF RALEIGH PUBLIC UTILITIES, AND NCDOT (WHERE APPLICABLE) ENGINEERING DESIGN AND CONSTRUCTION STANDARDS

Town Certification. This design has been reviewed by the Engineer for the Town of Knightdale, and to the best of my knowledge and belief, it conforms to the requirements established in the Standard Specifications of the Town of Knightdale.
By: _____ Date: _____
Town Engineer
These plans are approved by the Town of Knightdale and serve as construction plans for this project.
By: _____ Date: _____
Administrator

FINAL DRAWING - RELEASED FOR CONSTRUCTION

McADAMS

The John R. McAdams Company, Inc.
2905 Meridian Parkway
Durham, NC 27713

phone 919. 361. 5000
fax 919. 361. 2269
license number: C-0293, C-187

www.mcadamsco.com

CLIENT

ALLIANCE GROUP OF NC, LLC
7208 FALLS OF NEUSE RD, SUITE 101
RALEIGH, NORTH CAROLINA 27615
JACOB ANDERSON
PHONE: 919. 239. 9486

AGNC BROKERAGE | CONSULTING | PLANNING

REVISIONS

NO.	DATE	
1	----	----
2	----	----
3	----	----
4	----	----
5	----	----
6	----	----

NORTH CAROLINA PROFESSIONAL SEAL 051536 ENGINEER TYLER E. PROBST

DOWNTOWN NORTH AT KNIGHTDALE STATION

CONSTRUCTION DRAWINGS - PHASE 1

N SMITHFIELD ROAD

KNIGHTDALE, NORTH CAROLINA

PLAN INFORMATION

PROJECT NO.	AGN-21002
FILENAME	AGN21002-P1
CHECKED BY	JCM / TEP
DRAWN BY	MRC / LRS / RAD
SCALE	1" = 40'/1" = 4'
DATE	02. 16. 2024

PLAN AND PROFILE
FOURTH AVENUE
STA. 16+50 THRU STA. 25+00

C5.00

M:\Projects\AGN\AGN21002\04-Production\Engineering\Current Drawings\Construction Drawings Sets\Phase-1\AGN21002-P1.dwg, 2/16/2024 2:01:50 PM, John Martin

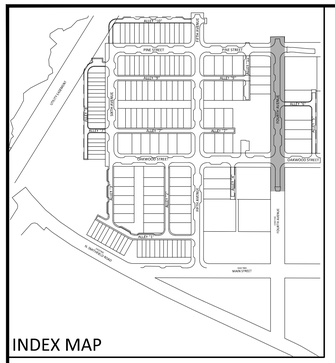

INDEX MAP

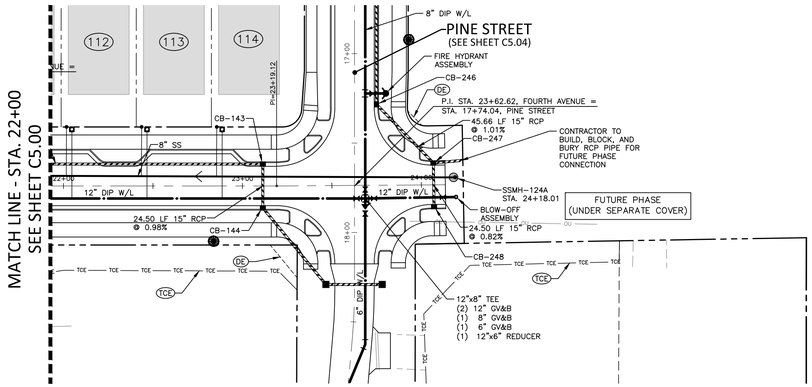

STORM DRAINAGE STRUCTURE TABLE:

CB-143 (NCDOT 840.03)
STA 23+11.37
T/C=328.36
INV IN=320.76 (CB-144)
INV OUT=320.66

CB-144 (NCDOT 840.03)
STA 23+11.37
T/C=328.36
INV IN=323.50 (DI-144A)
INV OUT=321.00

CB-247 (NCDOT 840.03)
STA 24+06.90
T/C=331.50
INV IN=325.00 (CB-247A)
INV IN=323.40 (CB-248)
INV OUT=322.30

CB-248 (NCDOT 840.03)
STA 24+06.90
T/C=331.50
INV OUT=323.60

EASEMENT LEGEND

- DE — STORM DRAINAGE EASEMENT
- UE — CITY OF RALEIGH WATERLINE EASEMENT
- SSE — CITY OF RALEIGH SANITARY SEWER EASEMENT
- AE — PUBLIC ACCESS EASEMENT

GRAPHIC SCALE
0 20 40 80
1 inch = 40 ft.

FOURTH AVENUE

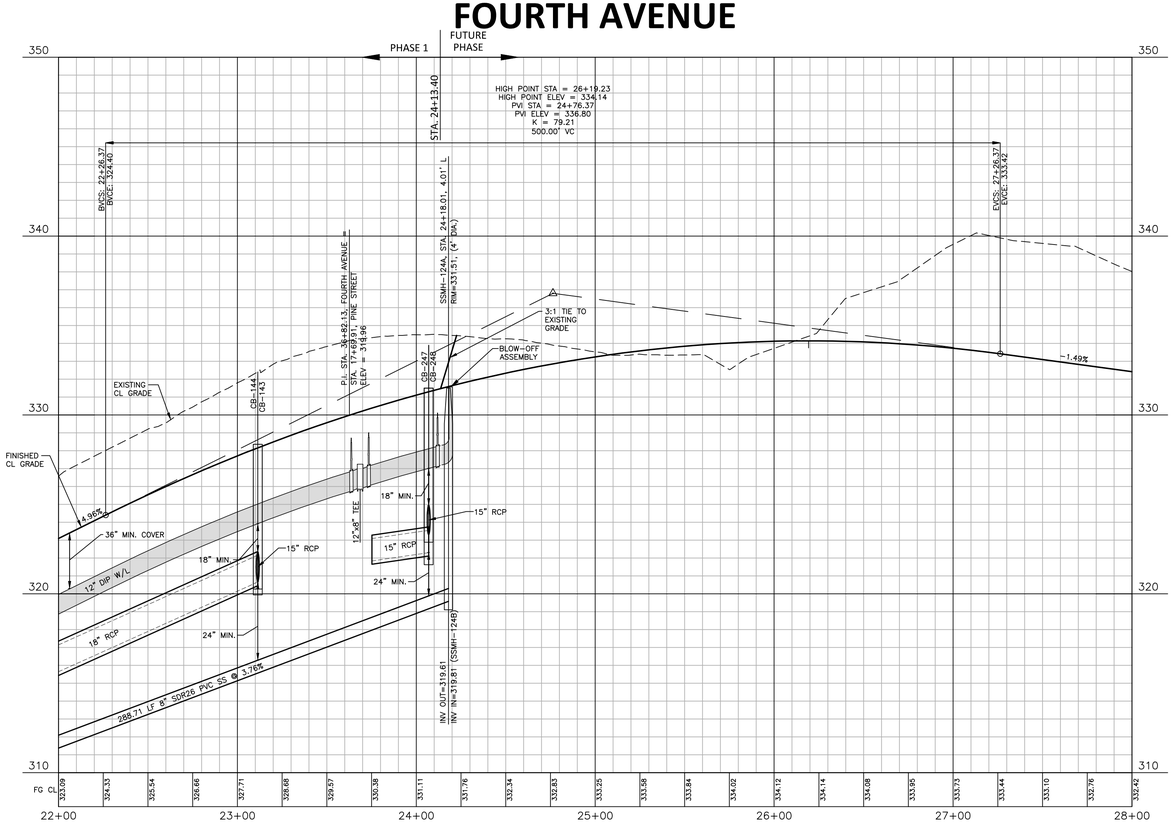

CITY OF RALEIGH – PLANS AUTHORIZED FOR CONSTRUCTION

Plans for the proposed use have been reviewed for general compliance with applicable codes. This limited review, and authorization for construction is not to be considered to represent total compliance with all legal requirements for development and construction. The property owner, design consultants, and contractors are each responsible for compliance with all applicable City, State and Federal laws. This specific authorization below is not a permit, nor shall it be construed to permit any violation of City, State or Federal Law. All Construction must be in accordance with all Local, State, and Federal Rules and Regulations.

Electronic Approval: This approval is being issued electronically. This approval is valid only upon the signature of a City of Raleigh Review Officer below. The City will retain a copy of the approved plans. Any work authorized by this approval must proceed in accordance with the plans kept on file with the City. This electronic approval may not be edited once issued. Any modification to this approval once issued will invalidate this approval.

City of Raleigh Development Approval _____
City of Raleigh Review Officer

SITE PERMITTING APPROVAL

Water and Sewer Permits (if applicable)

The City of Raleigh consents to the connection and extension of the City's Public Sewer System as shown on this plan. The material and Construction methods used for this project shall conform to the standards and specifications of the City's Public Utilities Handbook. City of Raleigh Public Utilities Department Permit # S-5378

The City of Raleigh consents to the connection and extension of the City's Public Water System as shown on this plan. The material and Construction methods used for this project shall conform to the standards and specifications of the City's Public Utilities Handbook. City of Raleigh Public Utilities Department Permit # W-4073

The City of Raleigh consents to the connection to its public sewer system and extension of the private sewer collection system as shown on this plan. The material and constructions methods used for this project shall conform to the standards and specifications of the City's Public Utilities Handbook.
City of Raleigh Public Utilities Department Permit # _____

SEE SHEET C0.01 FOR ALL PROJECT, SITE, GRADING, STORM DRAINAGE AND UTILITY NOTES

ALL CONSTRUCTION SHALL BE IN ACCORDANCE WITH THE CURRENT TOWN OF KNIGHTDALE, CITY OF RALEIGH PUBLIC UTILITIES, AND NCDOT (WHERE APPLICABLE) ENGINEERING DESIGN AND CONSTRUCTION STANDARDS

Town Certification. This design has been reviewed by the Engineer for the Town of Knightdale, and to the best of my knowledge and belief, it conforms to the requirements established in the Standard Specifications of the Town of Knightdale.
By: _____ Date: _____
Town Engineer
These plans are approved by the Town of Knightdale and serve as construction plans for this project.
By: _____ Date: _____
Administrator

FINAL DRAWING - RELEASED FOR CONSTRUCTION

M:\Projects\AGN\AGN21002\04-Production\Engineering\Current Drawings\Construction Drawings Sets\Phase-1\AGN21002-P1.dwg, 7/16/2024 2:02:06 PM, John Martin

McADAMS

The John R. McAdams Company, Inc.
2905 Meridian Parkway
Durham, NC 27713

phone 919. 361. 5000
fax 919. 361. 2269
license number: C-0293, C-187

www.mcadamsco.com

CLIENT

ALLIANCE GROUP OF NC, LLC
7208 FALLS OF NEUSE RD, SUITE 101
RALEIGH, NORTH CAROLINA 27615
JACOB ANDERSON
PHONE: 919. 239. 9486

AGNC BROKERAGE | CONSULTING | PLANNING

REVISIONS

NO.	DATE	
1	----	----
2	----	----
3	----	----
4	----	----
5	----	----
6	----	----

NORTH CAROLINA PROFESSIONAL SEAL 051536 ENGINEER TYLER E. PROBST

DOWNTOWN NORTH AT KNIGHTDALE STATION

CONSTRUCTION DRAWINGS - PHASE 1

N SMITHFIELD ROAD

KNIGHTDALE, NORTH CAROLINA

PLAN INFORMATION

PROJECT NO.	AGN-21002
FILENAME	AGN21002-P1
CHECKED BY	JCM / TEP
DRAWN BY	MRC / LRS / RAD
SCALE	1" = 40'/1" = 4'
DATE	02. 16. 2024

PLAN AND PROFILE
FOURTH AVENUE
STA. 16+50 THRU STA. 25+00

C5.01

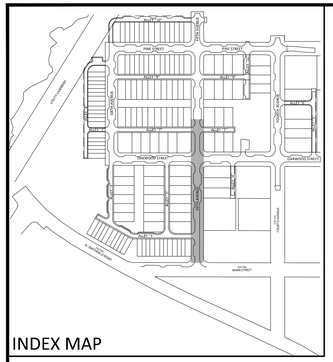

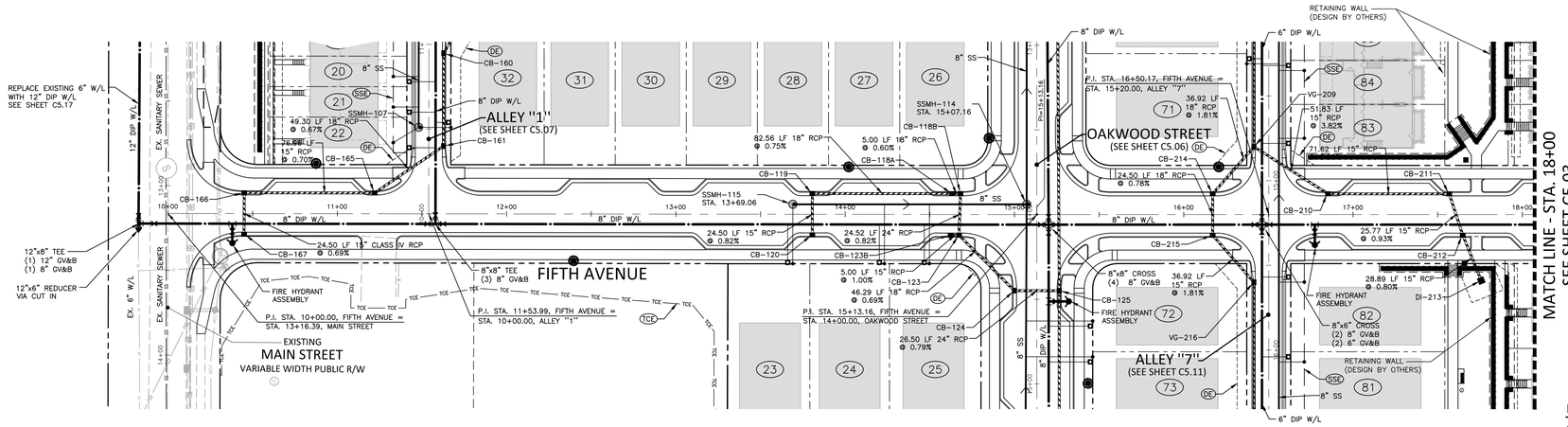

STORM DRAINAGE STRUCTURE TABLE:

CB-118A (NCDOT 840.03) STA 14+63.12 T/C=300.07 INV IN=293.63 (CB-119) INV OUT=293.53	CB-165 (NCDOT 840.03) STA 11+21.97 T/C=300.70 INV IN=292.19 (CB-166) INV OUT=291.94
CB-118B (NCDOT 840.03) STA 14+68.11 T/C=300.06 INV IN=293.50 (CB-118A) INV OUT=293.40	CB-166 (NCDOT 840.03) STA 10+45.01 T/C=296.91 INV IN=292.83 (CB-167) INV OUT=292.73
CB-119 (NCDOT 840.03) STA 13+80.56 T/C=301.36 INV IN=294.15 (CB-120) INV OUT=294.25	CB-167 (NCDOT 840.03) STA 10+44.92 T/C=296.90 INV OUT=293.00
CB-120 (NCDOT 840.03) STA 13+80.56 T/C=301.36 INV OUT=294.35	CB-210 (NCDOT 840.03) STA 16+85.19 T/C=306.55 INV IN=298.29 (CB-211) INV OUT=298.19
CB-123 (NCDOT 840.03) STA 14+67.22 T/C=300.06 INV IN=294.95 (CB-123B) INV IN=293.20 (CB-118B) INV OUT=293.10	CB-214 (NCDOT 840.03) STA 16+17.06 T/C=303.53 INV IN=296.22 (CB-215) INV OUT=296.12
CB-123B (NCDOT 840.03) STA 14+62.23 T/C=300.07 INV OUT=295.00	CB-215 (NCDOT 840.03) STA 16+17.06 T/C=303.53 INV IN=296.76 (VG-216) INV OUT=296.41

EASEMENT LEGEND

- (DE) STORM DRAINAGE EASEMENT
- (UE) CITY OF RALEIGH WATERLINE EASEMENT
- (SSE) CITY OF RALEIGH SANITARY SEWER EASEMENT
- (AE) PUBLIC ACCESS EASEMENT

GRAPHIC SCALE
0 20 40 80
1 inch = 40 ft.

FIFTH AVENUE

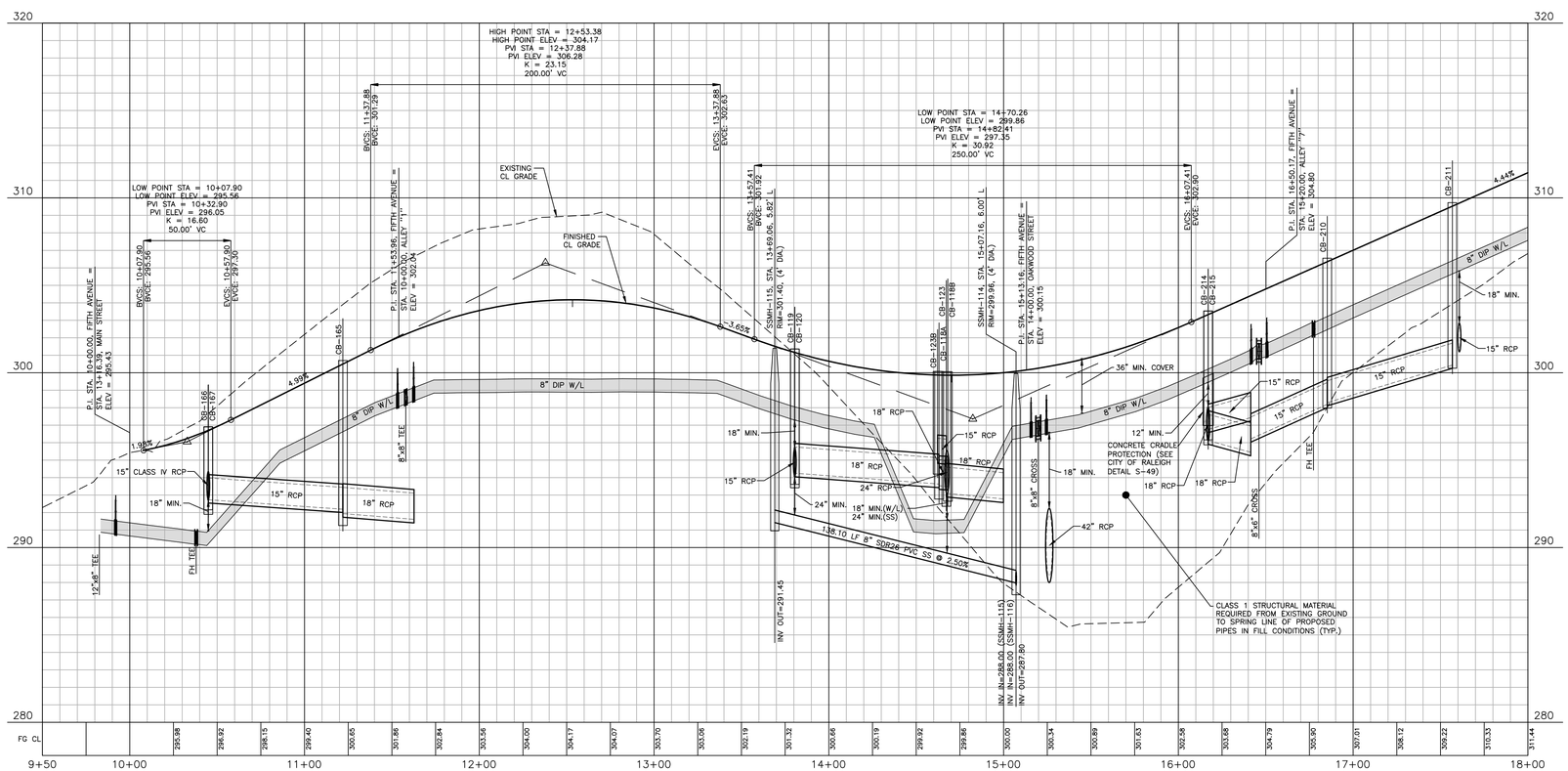

CITY OF RALEIGH – PLANS AUTHORIZED FOR CONSTRUCTION

Plans for the proposed use have been reviewed for general compliance with applicable codes. This limited review, and authorization for construction is not to be considered to represent total compliance with all legal requirements for development and construction. The property owner, design consultants, and contractors are each responsible for compliance with all applicable City, State and Federal laws. This specific authorization below is not a permit, nor shall it be construed to permit any violation of City, State or Federal Law. All Construction must be in accordance with all Local, State, and Federal Rules and Regulations.

Electronic Approval: This approval is being issued electronically. This approval is valid only upon the signature of a City of Raleigh Review Officer below. The City will retain a copy of the approved plans. Any work authorized by this approval must proceed in accordance with the plans kept on file with the City. This electronic approval may not be edited once issued. Any modification to this approval once issued will invalidate this approval.

City of Raleigh Development Approval _____
City of Raleigh Review Officer

SITE PERMITTING APPROVAL

Water and Sewer Permits (If applicable)

The City of Raleigh consents to the connection and extension of the City's Public Sewer System as shown on this plan. The material and Construction methods used for this project shall conform to the standards and specifications of the City's Public Utilities Handbook. City of Raleigh Public Utilities Department Permit # S-5378

The City of Raleigh consents to the connection and extension of the City's Public Water System as shown on this plan. The material and Construction methods used for this project shall conform to the standards and specifications of the City's Public Utilities Handbook. City of Raleigh Public Utilities Department Permit # W-4073

The City of Raleigh consents to the connection to its public sewer system and extension of the private sewer collection system as shown on this plan. The material and constructions methods used for this project shall conform to the standards and specifications of the City's Public Utilities Handbook.
City of Raleigh Public Utilities Department Permit # _____

SEE SHEET C0.01 FOR ALL PROJECT, SITE, GRADING, STORM DRAINAGE AND UTILITY NOTES

ALL CONSTRUCTION SHALL BE IN ACCORDANCE WITH THE CURRENT TOWN OF KNIGHTDALE, CITY OF RALEIGH PUBLIC UTILITIES, AND NCDOT (WHERE APPLICABLE) ENGINEERING DESIGN AND CONSTRUCTION STANDARDS

Town Certification. This design has been reviewed by the Engineer for the Town of Knightdale, and to the best of my knowledge and belief, it conforms to the requirements established in the Standard Specifications of the Town of Knightdale.
By: _____ Date: _____
Town Engineer
These plans are approved by the Town of Knightdale and serve as construction plans for this project.
By: _____ Date: _____
Administrator

FINAL DRAWING - RELEASED FOR CONSTRUCTION

M:\Projects\AGN\AGN21002\04-Production\Engineering\Current Drawings\Construction Drawings Sets\Phase-1\AGN21002-P1.dwg, 2/19/2024 2:26:12 PM, Megan Clifford

The John R. McAdams Company, Inc.
2905 Meridian Parkway
Durham, NC 27713

phone 919. 361. 5000
fax 919. 361. 2269
license number: C-0293, C-187

www.mcadamsco.com

CLIENT
ALLIANCE GROUP OF NC, LLC
7208 FALLS OF NEUSE RD, SUITE 101
RALEIGH, NORTH CAROLINA 27615
JACOB ANDERSON
PHONE: 919. 239. 9486

REVISIONS

NO.	DATE	
1	----	----
2	----	----
3	----	----
4	----	----
5	----	----
6	----	----

NORTH CAROLINA PROFESSIONAL SEAL 051536 ENGINEER TYLER E. PROBST

DOWNTOWN NORTH AT KNIGHTDALE STATION
CONSTRUCTION DRAWINGS - PHASE 1
N SMITHFIELD ROAD
KNIGHTDALE, NORTH CAROLINA

PLAN INFORMATION

PROJECT NO.	AGN-21002
FILENAME	AGN21002-P1
CHECKED BY	JCM / TEP
DRAWN BY	MRC / LRS / RAD
SCALE	1" = 40'/1" = 4'
DATE	02. 16. 2024

PLAN AND PROFILE
FIFTH AVENUE
STA. 9+50 THRU STA. 17+00

C5.02

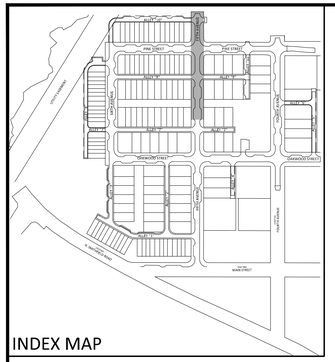

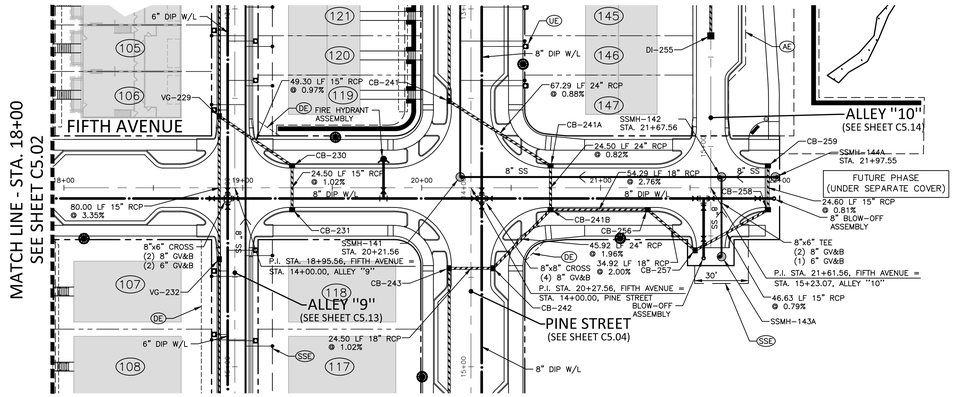

STORM DRAINAGE STRUCTURE TABLE:

CB-230 (NCDOT 840.03) STA 19+27.56 T/C=317.30 INV IN=310.25 (CB-231) INV OUT=308.66	CB-256 (NCDOT 840.03) STA 21+26.29 T/C=324.64 INV IN=317.00 (CB-257) INV OUT=316.00
CB-231 (NCDOT 840.03) STA 19+27.56 T/C=317.30 INV OUT=310.50	CB-257 (NCDOT 840.03) STA ??? T/C=325.90 INV IN=318.00 (CB-260) INV IN=318.30 (CB-258) INV OUT=317.70
CB-241A (NCDOT 840.03) STA 20+72.00 T/C=323.07 INV IN=312.44 (CB-241B) INV OUT=312.34	CB-258 (NCDOT 840.03) STA 21+93.56 T/C=326.10 INV IN=318.80 (CB-259) INV OUT=318.67
CB-241B (NCDOT 840.03) STA 20+72.00 T/C=323.07 INV IN=313.20 (CB-242) INV IN=314.50 (CB-256) INV OUT=312.64	CB-259 (NCDOT 840.03) STA 21+93.56 T/C=326.10 INV OUT=319.00

EASEMENT LEGEND

- (DE) STORM DRAINAGE EASEMENT
- (UE) CITY OF RALEIGH WATERLINE EASEMENT
- (SSE) CITY OF RALEIGH SANITARY SEWER EASEMENT
- (AE) PUBLIC ACCESS EASEMENT

GRAPHIC SCALE
0 20 40 80
1 inch = 40 ft.

FIFTH AVENUE

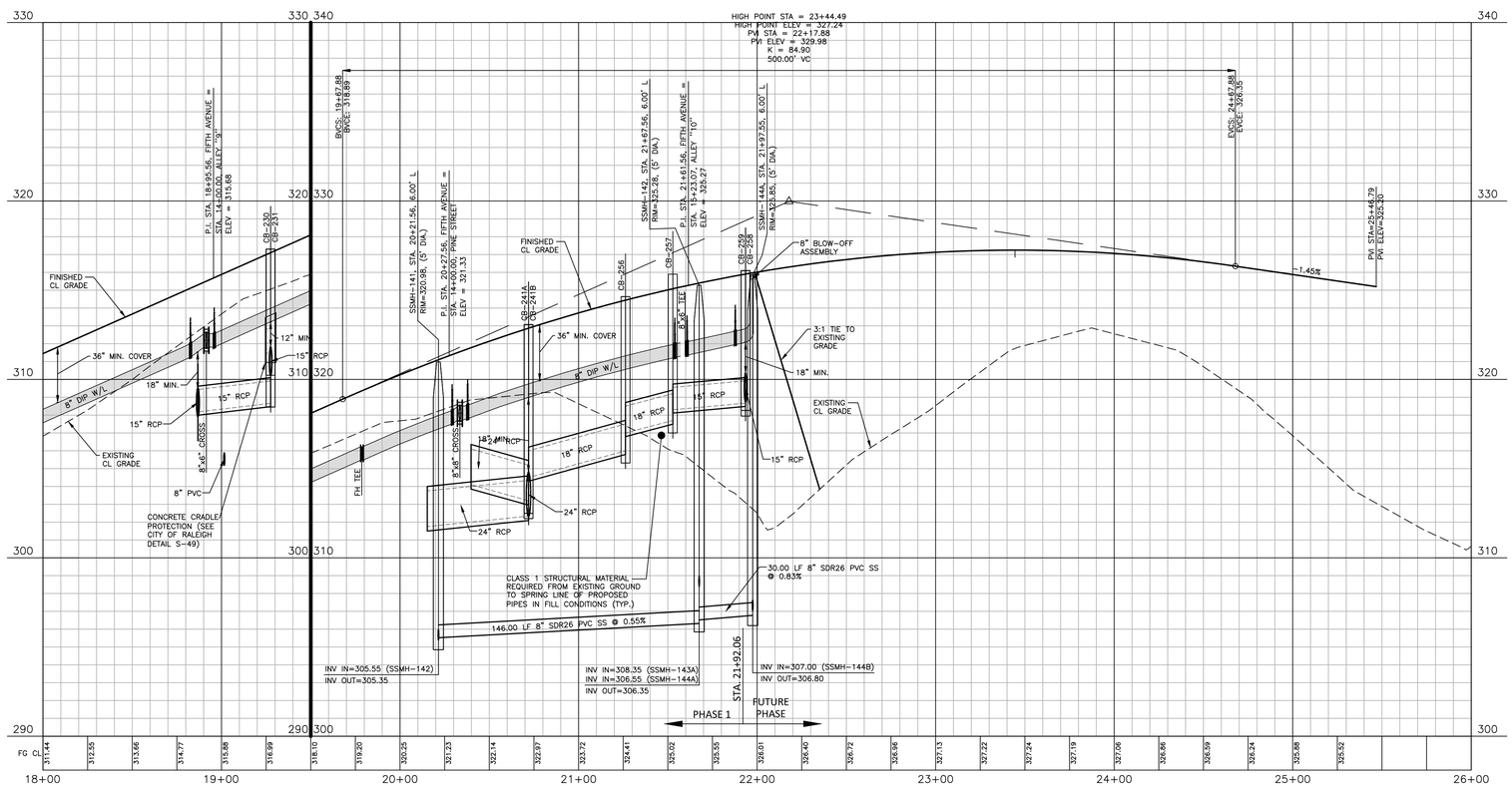

CITY OF RALEIGH – PLANS AUTHORIZED FOR CONSTRUCTION

Plans for the proposed use have been reviewed for general compliance with applicable codes. This limited review, and authorization for construction is not to be considered to represent total compliance with all legal requirements for development and construction. The property owner, design consultants, and contractors are each responsible for compliance with all applicable City, State and Federal laws. This specific authorization below is not a permit, nor shall it be construed to permit any violation of City, State or Federal Law. All Construction must be in accordance with all Local, State, and Federal Rules and Regulations.

Electronic Approval: This approval is being issued electronically. This approval is valid only upon the signature of a City of Raleigh Review Officer below. The City will retain a copy of the approved plans. Any work authorized by this approval must proceed in accordance with the plans kept on file with the City. This electronic approval may not be edited once issued. Any modification to this approval once issued will invalidate this approval.

City of Raleigh Development Approval _____
City of Raleigh Review Officer

SITE PERMITTING APPROVAL

Water and Sewer Permits (If applicable)

The City of Raleigh consents to the connection and extension of the City's Public Sewer System as shown on this plan. The material and Construction methods used for this project shall conform to the standards and specifications of the City's Public Utilities Handbook. City of Raleigh Public Utilities Department Permit # S-5378

The City of Raleigh consents to the connection and extension of the City's Public Water System as shown on this plan. The material and Construction methods used for this project shall conform to the standards and specifications of the City's Public Utilities Handbook. City of Raleigh Public Utilities Department Permit # W-4073

The City of Raleigh consents to the connection to its public sewer system and extension of the private sewer collection system as shown on this plan. The material and constructions methods used for this project shall conform to the standards and specifications of the City's Public Utilities Handbook.
City of Raleigh Public Utilities Department Permit # _____

SEE SHEET C0.01 FOR ALL PROJECT, SITE, GRADING, STORM DRAINAGE AND UTILITY NOTES

ALL CONSTRUCTION SHALL BE IN ACCORDANCE WITH THE CURRENT TOWN OF KNIGHTDALE, CITY OF RALEIGH PUBLIC UTILITIES, AND NCDOT (WHERE APPLICABLE) ENGINEERING DESIGN AND CONSTRUCTION STANDARDS

Town Certification. This design has been reviewed by the Engineer for the Town of Knightdale, and to the best of my knowledge and belief, it conforms to the requirements established in the Standard Specifications of the Town of Knightdale.
By: _____ Date: _____
Town Engineer
These plans are approved by the Town of Knightdale and serve as construction plans for this project.
By: _____ Date: _____
Administrator

FINAL DRAWING - RELEASED FOR CONSTRUCTION

M:\Projects\AGN\AGN21002\04-Production\Engineering\Current Drawings\Construction Drawings Sets\Phase-1\AGN21002-P1.dwg, 2/19/2024 2:23:59 PM, Megan Clifford

The John R. McAdams Company, Inc.
2905 Meridian Parkway
Durham, NC 27713

phone 919. 361. 5000
fax 919. 361. 2269
license number: C-0293, C-187

www.mcadamsco.com

CLIENT

ALLIANCE GROUP OF NC, LLC
7208 FALLS OF NEUSE RD, SUITE 101
RALEIGH, NORTH CAROLINA 27615
JACOB ANDERSON
PHONE: 919. 239. 9486

REVISIONS

NO.	DATE	
1	----	----
2	----	----
3	----	----
4	----	----
5	----	----
6	----	----

NORTH CAROLINA PROFESSIONAL SEAL 051536 ENGINEER TYLER E. PROST

DOWNTOWN NORTH AT KNIGHTDALE STATION

CONSTRUCTION DRAWINGS - PHASE 1

N SMITHFIELD ROAD

KNIGHTDALE, NORTH CAROLINA

PLAN INFORMATION

PROJECT NO.	AGN-21002
FILENAME	AGN21002-P1
CHECKED BY	JCM / TEP
DRAWN BY	MRC / LRS / RAD
SCALE	1" = 40'/1" = 4'
DATE	02. 16. 2024

PLAN AND PROFILE
FIFTH AVENUE
STA. 17+00 THRU STA. 23+00

C5.03

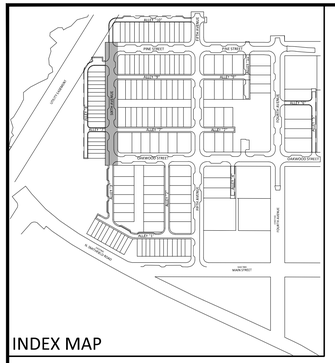

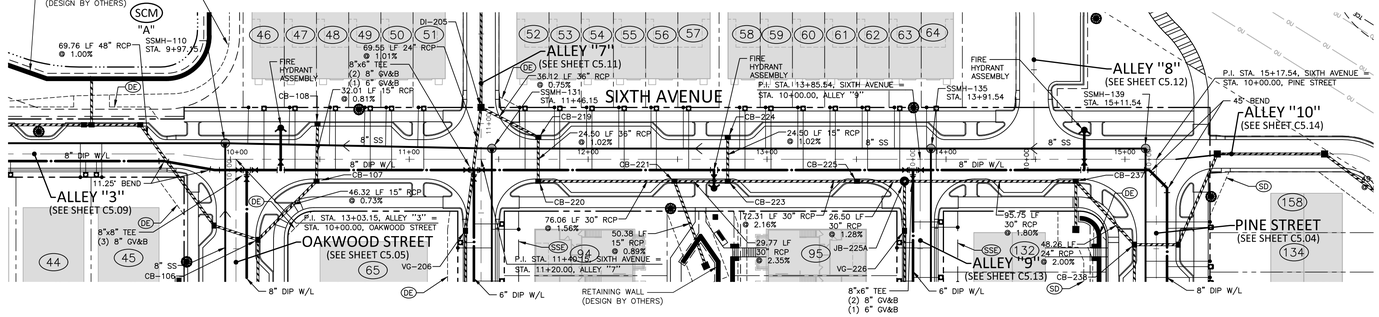

STORM DRAINAGE STRUCTURE TABLE:

CB-107 (NCDOT 840.03) STA 10+48.15 T/C=293.32 INV IN=285.64 (CB-108) INV OUT=285.55	CB-224 (NCDOT 840.03) STA 12+77.98 T/C=297.49 INV OUT=293.00
CB-108 (NCDOT 840.03) STA 10+48.74 T/C=293.19 INV OUT=285.90	CB-225 (NCDOT 840.03) STA 13+50.29 T/C=299.44 INV IN=291.40 (JB-225A) INV OUT=291.06
CB-219 (NCDOT 840.03) STA 11+72.15 T/C=295.57 INV IN=285.97 (CB-220) INV OUT=285.77	CB-237 (NCDOT 840.03) STA 14+72.54 T/C=302.80 INV IN=294.73 (CB-238) INV IN=296.13 (DI-264) INV OUT=294.12
CB-220 (NCDOT 840.03) STA 11+72.15 T/C=295.57 INV IN=286.75 (CB-221) INV OUT=286.22	JB-225A (STANDARD) STA 13+76.79 RIM=299.77 INV IN=292.40 (CB-237) INV IN=293.53 (VG-226) INV OUT=291.74
CB-221 (NCDOT 840.03) STA 12+48.21 T/C=296.82 INV IN=288.40 (CB-223) INV IN=290.75 (DI-222) INV OUT=287.94	
CB-223 (NCDOT 840.03) STA 12+77.98 T/C=297.49 INV IN=289.50 (CB-225) INV IN=293.00 (YI-288) INV IN=292.75 (CB-224) INV OUT=289.10	

LEGEND

SCM — STORMWATER CONTROL MEASURE

EASEMENT LEGEND

- DE — STORM DRAINAGE EASEMENT
- UE — CITY OF RALEIGH WATERLINE EASEMENT
- SSE — CITY OF RALEIGH SANITARY SEWER EASEMENT
- AE — PUBLIC ACCESS EASEMENT

GRAPHIC SCALE
0 20 40 80
1 inch = 40 ft.

SIXTH AVENUE

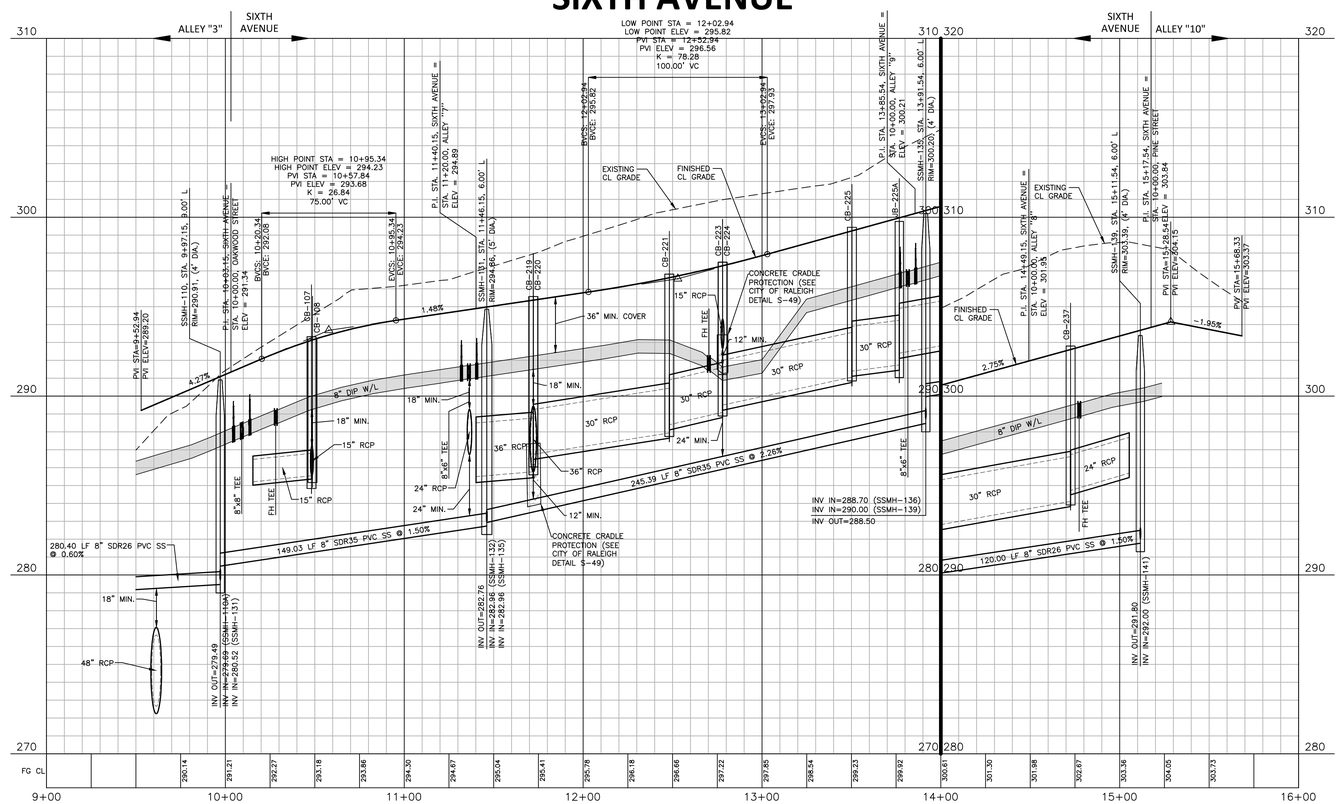

CITY OF RALEIGH – PLANS AUTHORIZED FOR CONSTRUCTION

Plans for the proposed use have been reviewed for general compliance with applicable codes. This limited review, and authorization for construction is not to be considered to represent total compliance with all legal requirements for development and construction. The property owner, design consultants, and contractors are each responsible for compliance with all applicable City, State and Federal laws. This specific authorization below is not a permit, nor shall it be construed to permit any violation of City, State or Federal Law. All Construction must be in accordance with all Local, State, and Federal Rules and Regulations.

Electronic Approval: This approval is being issued electronically. This approval is valid only upon the signature of a City of Raleigh Review Officer below. The City will retain a copy of the approved plans. Any work authorized by this approval must proceed in accordance with the plans kept on file with the City. This electronic approval may not be edited once issued. Any modification to this approval once issued will invalidate this approval.

City of Raleigh Development Approval _____
City of Raleigh Review Officer

SITE PERMITTING APPROVAL

Water and Sewer Permits (If applicable)

The City of Raleigh consents to the connection and extension of the City's Public Sewer System as shown on this plan. The material and Construction methods used for this project shall conform to the standards and specifications of the City's Public Utilities Handbook. City of Raleigh Public Utilities Department Permit # S-5378

The City of Raleigh consents to the connection and extension of the City's Public Water System as shown on this plan. The material and Construction methods used for this project shall conform to the standards and specifications of the City's Public Utilities Handbook. City of Raleigh Public Utilities Department Permit # W-4073

The City of Raleigh consents to the connection to its public sewer system and extension of the private sewer collection system as shown on this plan. The material and constructions methods used for this project shall conform to the standards and specifications of the City's Public Utilities Handbook.
City of Raleigh Public Utilities Department Permit # _____

SEE SHEET C0.01 FOR ALL PROJECT, SITE, GRADING, STORM DRAINAGE AND UTILITY NOTES

ALL CONSTRUCTION SHALL BE IN ACCORDANCE WITH THE CURRENT TOWN OF KNIGHTDALE, CITY OF RALEIGH PUBLIC UTILITIES, AND NCDOT (WHERE APPLICABLE) ENGINEERING DESIGN AND CONSTRUCTION STANDARDS

Town Certification. This design has been reviewed by the Engineer for the Town of Knightdale, and to the best of my knowledge and belief, it conforms to the requirements established in the Standard Specifications of the Town of Knightdale.
By: _____ Date: _____
Town Engineer
These plans are approved by the Town of Knightdale and serve as construction plans for this project.
By: _____ Date: _____
Administrator

FINAL DRAWING - RELEASED FOR CONSTRUCTION

M:\Projects\AGN\AGN21002\04-Production\Engineering\Current Drawing\Construction Drawings Sets\Phase-1\AGN21002-P1.dwg, 2/19/2024 2:32:53 PM, Megan Clifford

The John R. McAdams Company, Inc.
2905 Meridian Parkway
Durham, NC 27713

phone 919. 361. 5000
fax 919. 361. 2269
license number: C-0293, C-187

www.mcadamsco.com

CLIENT
ALLIANCE GROUP OF NC, LLC
7208 FALLS OF NEUSE RD, SUITE 101
RALEIGH, NORTH CAROLINA 27615
JACOB ANDERSON
PHONE: 919. 239. 9486

REVISIONS

NO.	DATE	
1	-----	-----
2	-----	-----
3	-----	-----
4	-----	-----
5	-----	-----
6	-----	-----

NORTH CAROLINA PROFESSIONAL SEAL 051536 ENGINEER TYLER E. PROBST

DOWNTOWN NORTH AT KNIGHTDALE STATION
CONSTRUCTION DRAWINGS - PHASE 1
N SMITHFIELD ROAD
KNIGHTDALE, NORTH CAROLINA

PLAN INFORMATION

PROJECT NO.	AGN-21002
FILENAME	AGN21002-P1
CHECKED BY	JCM / TEP
DRAWN BY	MRC / LRS / RAD
SCALE	1" = 40'/1" = 4'
DATE	02. 16. 2024

PLAN AND PROFILE
SIXTH AVENUE
STA. 9+00 THRU STA. 16+00

C5.04

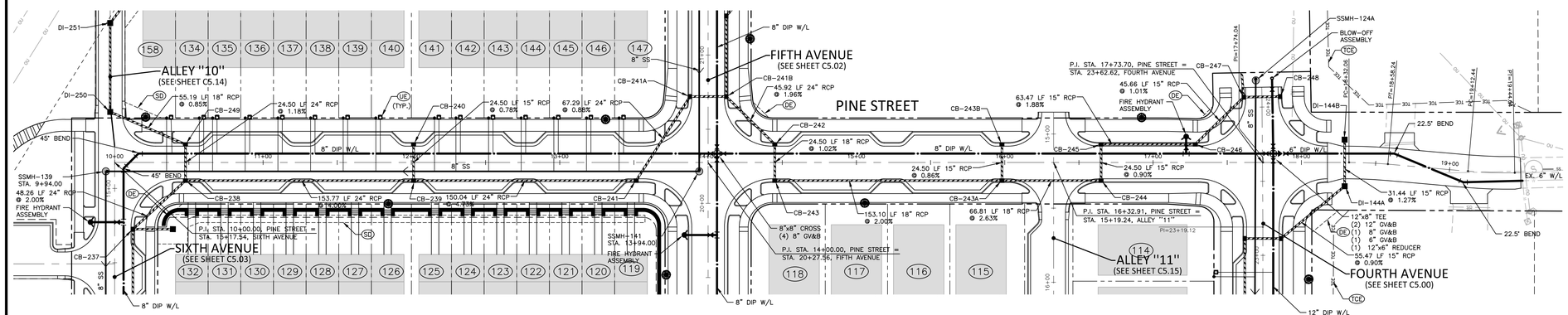

STORM DRAINAGE STRUCTURE TABLE:

CB-238 (NCDOT 840.03) STA 10+47.69 T/C=304.88 INV IN=297.35 (CB-239) INV IN=296.70 (CB-249) INV OUT=295.70	CB-243A (NCDOT 840.03) STA 15+98.10 T/C=325.87 INV IN=318.14 (CB-244) INV IN=318.35 (CB-243B) INV OUT=317.61	DI-144A (NCDOT 840.16) STA 18+29.07 T/G=330.50 INV IN=324.10 (DI-144B) INV OUT=324.00
CB-239 (NCDOT 840.03) STA 12+01.46 T/C=312.60 INV IN=304.00 (CB-241) INV IN=305.35 (CB-240) INV OUT=303.50	CB-243B (NCDOT 840.03) STA 15+98.10 T/C=325.87 INV OUT=318.56	DI-144B (NCDOT 840.16) STA 18+29.07 T/G=330.50 INV OUT=324.50
CB-240 (NCDOT 840.03) STA 12+01.46 T/C=312.60 INV OUT=305.54	CB-244 (NCDOT 840.03) STA 16+64.91 T/C=327.60 INV IN=320.00 (CB-245) INV OUT=319.90	
CB-241 (NCDOT 840.03) STA 13+51.50 T/C=320.15 INV IN=311.75 (CB-241A) INV OUT=311.10	CB-245 (NCDOT 840.03) STA 16+64.91 T/C=327.60 INV IN=320.55 (CB-246) INV OUT=320.22	
CB-242 (NCDOT 840.03) STA 14+45.00 T/C=321.92 INV IN=314.20 (CB-243) INV OUT=314.10	CB-246 (NCDOT 840.03) STA 17+28.38 T/C=329.23 INV IN=321.84 (CB-247) INV OUT=321.74	
CB-243 (NCDOT 840.03) STA 14+45.00 T/C=321.92 INV IN=314.55 (CB-243A) INV OUT=314.45	CB-249 (NCDOT 840.03) STA 10+47.69 T/C=304.88 INV IN=297.30 (DI-250) INV OUT=296.99	

EASEMENT LEGEND

- (DE) STORM DRAINAGE EASEMENT
- (UE) CITY OF RALEIGH WATERLINE EASEMENT
- (SSE) CITY OF RALEIGH SANITARY SEWER EASEMENT
- (AE) PUBLIC ACCESS EASEMENT

GRAPHIC SCALE
0 20 40 80
1 inch = 40 ft.

PINE STREET

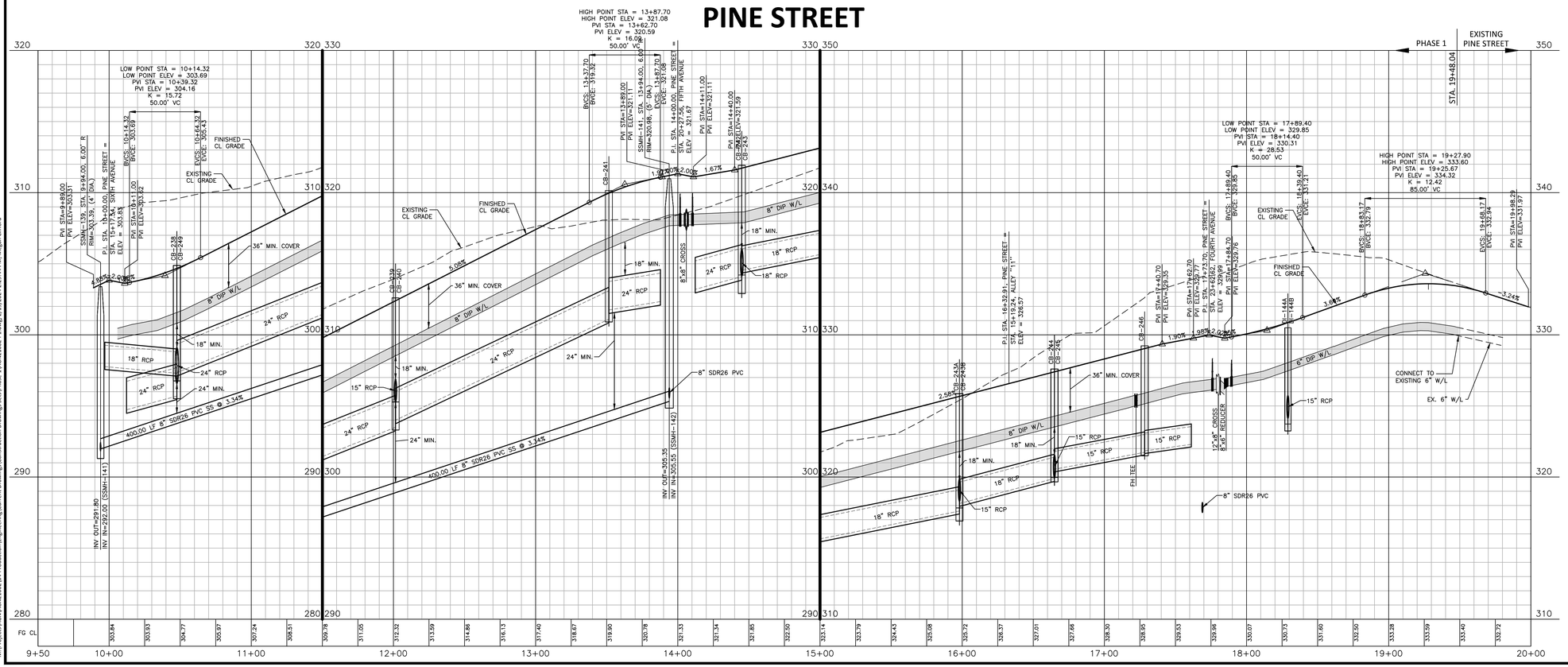

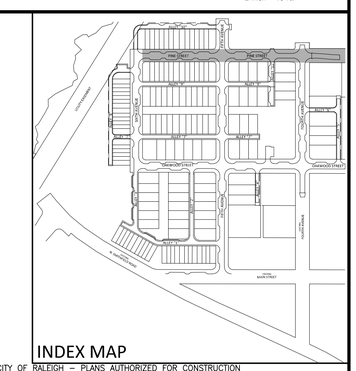

CITY OF RALEIGH – PLANS AUTHORIZED FOR CONSTRUCTION

Plans for the proposed use have been reviewed for general compliance with applicable codes. This limited review, and authorization for construction is not to be considered to represent total compliance with all legal requirements for development and construction. The property owner, design consultants, and contractors are each responsible for compliance with all applicable City, State and Federal laws. This specific authorization below is not a permit, nor shall it be construed to permit any violation of City, State or Federal Law. All Construction must be in accordance with all Local, State, and Federal Rules and Regulations.

Electronic Approval: This approval is being issued electronically. This approval is valid only upon the signature of a City of Raleigh Review Officer below. The City will retain a copy of the approved plans. Any work authorized by this approval must proceed in accordance with the plans kept on file with the City. This electronic approval may not be edited once issued. Any modification to this approval once issued will invalidate this approval.

City of Raleigh Development Approval _____
City of Raleigh Review Officer
SITE PERMITTING APPROVAL

Water and Sewer Permits (If applicable)

The City of Raleigh consents to the connection and extension of the City's Public Sewer System as shown on this plan. The material and Construction methods used for this project shall conform to the standards and specifications of the City's Public Utilities Handbook. City of Raleigh Public Utilities Department Permit # S-5378

The City of Raleigh consents to the connection and extension of the City's Public Water System as shown on this plan. The material and Construction methods used for this project shall conform to the standards and specifications of the City's Public Utilities Handbook. City of Raleigh Public Utilities Department Permit # W-4073

The City of Raleigh consents to the connection to its public sewer system and extension of the private sewer collection system as shown on this plan. The material and constructions methods used for this project shall conform to the standards and specifications of the City's Public Utilities Handbook.
City of Raleigh Public Utilities Department Permit # _____

SEE SHEET C0.01 FOR ALL PROJECT, SITE, GRADING, STORM DRAINAGE AND UTILITY NOTES

ALL CONSTRUCTION SHALL BE IN ACCORDANCE WITH THE CURRENT TOWN OF KNIGHTDALE, CITY OF RALEIGH PUBLIC UTILITIES, AND NCDOT (WHERE APPLICABLE) ENGINEERING DESIGN AND CONSTRUCTION STANDARDS

Town Certification. This design has been reviewed by the Engineer for the Town of Knightdale, and to the best of my knowledge and belief, it conforms to the requirements established in the Standard Specifications of the Town of Knightdale.
By: _____ Date: _____
Town Engineer
These plans are approved by the Town of Knightdale and serve as construction plans for this project.
By: _____ Date: _____
Administrator

FINAL DRAWING - RELEASED FOR CONSTRUCTION

The John R. McAdams Company, Inc.
2905 Meridian Parkway
Durham, NC 27713

phone 919. 361. 5000
fax 919. 361. 2269
license number: C-0293, C-187

www.mcadamsco.com

CLIENT
ALLIANCE GROUP OF NC, LLC
7208 FALLS OF NEUSE RD, SUITE 101
RALEIGH, NORTH CAROLINA 27615
JACOB ANDERSON
PHONE: 919. 239. 9486

REVISIONS

NO.	DATE	
1	----	----
2	----	----
3	----	----
4	----	----
5	----	----
6	----	----

NORTH CAROLINA PROFESSIONAL SEAL 051536 ENGINEER TYLER E PROBST

DOWNTOWN NORTH AT KNIGHTDALE STATION
CONSTRUCTION DRAWINGS - PHASE 1
N SMITHFIELD ROAD
KNIGHTDALE, NORTH CAROLINA

PLAN INFORMATION

PROJECT NO.	AGN-21002
FILENAME	AGN21002-P1
CHECKED BY	JCM / TEP
DRAWN BY	MRC / LRS / RAD
SCALE	1" = 40'/1" = 4'
DATE	02. 16. 2024

PLAN AND PROFILE
PINE STREET
STA. 9+50 THRU STA. 20+00

C5.05

M:\Projects\AGN\AGN21002\04-Production\Engineering\Current Drawings\Construction Drawings Set\Phase-1\AGN21002-P1.dwg, 2/19/2024 2:29:44 PM, Megan Clifford

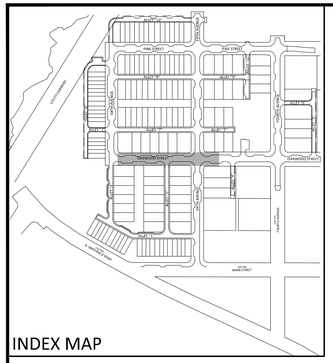

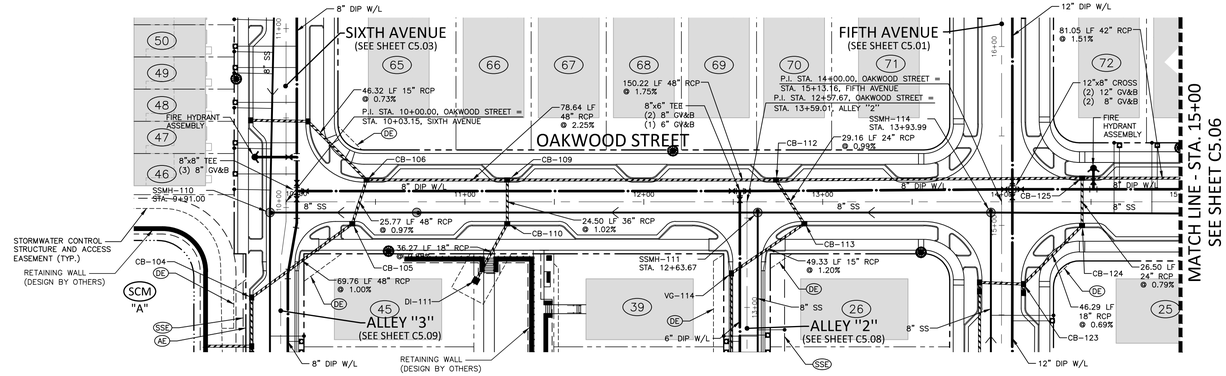

STORM DRAINAGE STRUCTURE TABLE:

CB-105 (NCDOT 840.03) STA 10+37.01 T/C=291.84 INV IN=274.20 (CB-106) INV OUT=273.15	CB-112 (NCDOT 840.03) STA 12+73.86 T/C=299.91 INV IN=287.10 (CB-125) INV IN=289.37 (CB-113) INV OUT=286.13
CB-106 (NCDOT 840.03) STA 10+45.00 T/C=292.13 INV IN=281.00 (CB-109) INV IN=285.21 (CB-107) INV OUT=274.45	CB-113 (NCDOT 840.03) STA 12+89.67 T/C=300.29 INV IN=291.41 (VG-114) INV OUT=289.66
CB-109 (NCDOT 840.03) STA 11+23.64 T/C=294.75 INV IN=283.50 (CB-112) INV IN=285.50 (CB-110) INV OUT=282.77	CB-124 (NCDOT 840.03) STA 14+44.94 T/C=300.79 INV IN=292.78 (CB-123) INV OUT=292.68
CB-110 (NCDOT 840.03) STA 11+23.64 T/C=294.75 INV IN=288.78 (YI-185) INV IN=286.00 (DI-111) INV OUT=285.75	CB-125 (NCDOT 840.03) STA 14+45.00 T/C=300.79 INV IN=289.57 (JB-126) INV IN=292.47 (CB-124) INV OUT=288.81

EASEMENT LEGEND

- (DE) STORM DRAINAGE EASEMENT
- (UE) CITY OF RALEIGH WATERLINE EASEMENT
- (SSE) CITY OF RALEIGH SANITARY SEWER EASEMENT
- (AE) PUBLIC ACCESS EASEMENT

GRAPHIC SCALE
0 20 40 80
1 inch = 40 ft.

OAKWOOD STREET

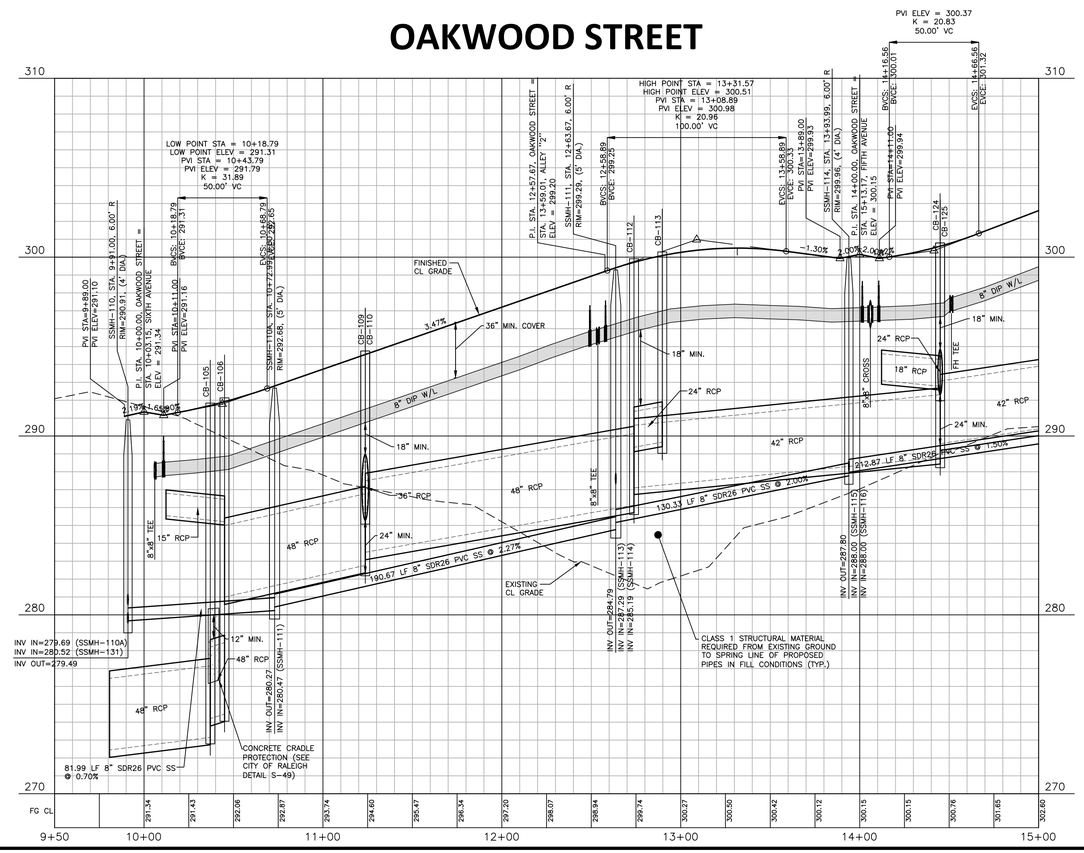

CITY OF RALEIGH – PLANS AUTHORIZED FOR CONSTRUCTION

Plans for the proposed use have been reviewed for general compliance with applicable codes. This limited review, and authorization for construction is not to be considered to represent total compliance with all legal requirements for development and construction. The property owner, design consultants, and contractors are each responsible for compliance with all applicable City, State and Federal laws. This specific authorization below is not a permit, nor shall it be construed to permit any violation of City, State or Federal Law. All Construction must be in accordance with all Local, State, and Federal Rules and Regulations.

Electronic Approval: This approval is being issued electronically. This approval is valid only upon the signature of a City of Raleigh Review Officer below. The City will retain a copy of the approved plans. Any work authorized by this approval must proceed in accordance with the plans kept on file with the City. This electronic approval may not be edited once issued. Any modification to this approval once issued will invalidate this approval.

City of Raleigh Development Approval _____
City of Raleigh Review Officer

SITE PERMITTING APPROVAL

Water and Sewer Permits (If applicable)

The City of Raleigh consents to the connection and extension of the City's Public Sewer System as shown on this plan. The material and Construction methods used for this project shall conform to the standards and specifications of the City's Public Utilities Handbook. City of Raleigh Public Utilities Department Permit # S-5378

The City of Raleigh consents to the connection and extension of the City's Public Water System as shown on this plan. The material and Construction methods used for this project shall conform to the standards and specifications of the City's Public Utilities Handbook. City of Raleigh Public Utilities Department Permit # W-4073

The City of Raleigh consents to the connection to its public sewer system and extension of the private sewer collection system as shown on this plan. The material and constructions methods used for this project shall conform to the standards and specifications of the City's Public Utilities Handbook.
City of Raleigh Public Utilities Department Permit # _____

SEE SHEET C0.01 FOR ALL PROJECT, SITE, GRADING, STORM DRAINAGE AND UTILITY NOTES

ALL CONSTRUCTION SHALL BE IN ACCORDANCE WITH THE CURRENT TOWN OF KNIGHTDALE, CITY OF RALEIGH PUBLIC UTILITIES, AND NCDOT (WHERE APPLICABLE) ENGINEERING DESIGN AND CONSTRUCTION STANDARDS

Town Certification. This design has been reviewed by the Engineer for the Town of Knightdale, and to the best of my knowledge and belief, it conforms to the requirements established in the Standard Specifications of the Town of Knightdale.
By: _____ Date: _____
Town Engineer
These plans are approved by the Town of Knightdale and serve as construction plans for this project.
By: _____ Date: _____
Administrator

FINAL DRAWING - RELEASED FOR CONSTRUCTION

M:\Project\AGN\AGN21002\04-Production\Engineering\Current Drawings\Construction Drawings Sets\Phase-1\AGN21002-P1.dwg, 7/19/2024 2:37:06 PM, Megan Clifford

McADAMS

The John R. McAdams Company, Inc.
2905 Meridian Parkway
Durham, NC 27713

phone 919. 361. 5000
fax 919. 361. 2269
license number: C-0293, C-187

www.mcadamsco.com

CLIENT

ALLIANCE GROUP OF NC, LLC
7208 FALLS OF NEUSE RD, SUITE 101
RALEIGH, NORTH CAROLINA 27615
JACOB ANDERSON
PHONE: 919. 239. 9486

AGNC BROKERAGE | CONSULTING | PLANNING

REVISIONS

NO.	DATE	
1	----	----
2	----	----
3	----	----
4	----	----
5	----	----
6	----	----

NORTH CAROLINA PROFESSIONAL SEAL 051536 ENGINEER TYLER E. PROBST

DOWNTOWN NORTH AT KNIGHTDALE STATION

CONSTRUCTION DRAWINGS - PHASE 1

N SMITHFIELD ROAD

KNIGHTDALE, NORTH CAROLINA

PLAN INFORMATION

PROJECT NO.	AGN-21002
FILENAME	AGN21002-P1
CHECKED BY	JCM / TEP
DRAWN BY	MRC / LRS / RAD
SCALE	1" = 40'/1" = 4'
DATE	02. 16. 2024

PLAN AND PROFILE

OAKWOOD STREET

STA. 9+50 THRU STA. 15+00

C5.06

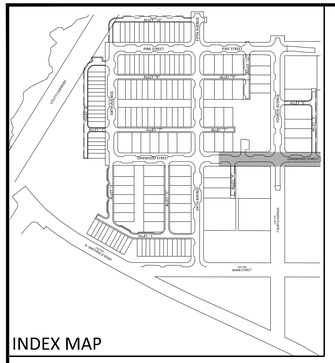

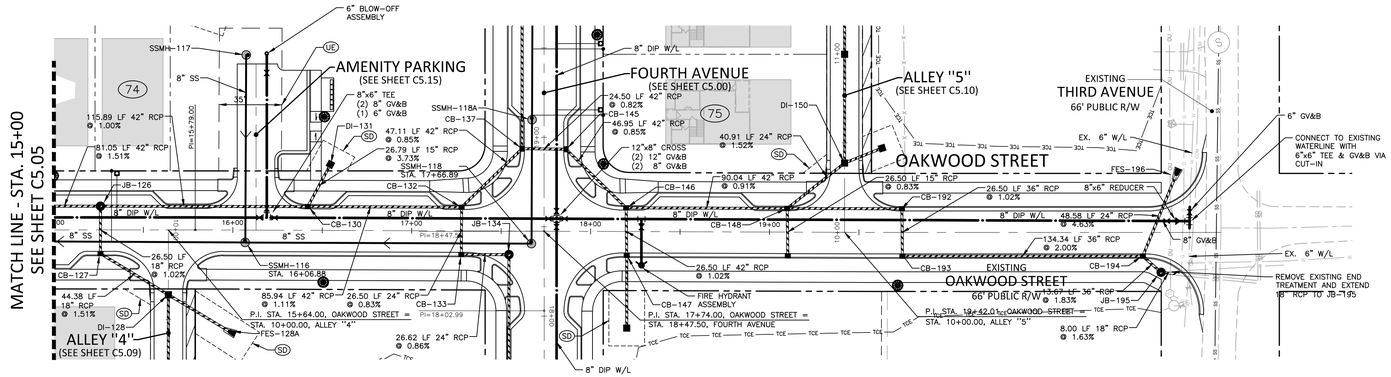

STORM DRAINAGE STRUCTURE TABLE:

CB-127 (NCDOT 840.03) STA 15+26.05 T/C=303.77 INV IN=297.00 (DI-128) INV OUT=296.36	CB-147 (NCDOT 840.03) STA 18+20.25 T/C=306.54 INV IN=299.25 (FES-147A) INV OUT=297.57	JB-126 (STANDARD) STA 15+26.05 RIM=303.43 INV IN=292.86 (CB-130) INV IN=296.09 (CB-127) INV OUT=290.79
CB-130 (NCDOT 840.03) STA 16+41.89 T/C=306.94 INV IN=294.22 (CB-132) INV IN=302.00 (DI-131) INV OUT=294.02	CB-148 (NCDOT 840.03) STA 19+09.87 T/C=307.66 INV IN=302.12 (DI-150) INV IN=300.28 (CB-192) INV IN=300.53 (CB-149) INV OUT=298.12	JB-195 (STANDARD) STA 21+18.90 RIM=313.11 INV IN=309.32 (EX) INV OUT=306.00
CB-132 (NCDOT 840.03) STA 17+27.83 T/C=306.55 INV IN=295.80 (CB-137) INV IN=297.75 (CB-133) INV OUT=295.17	CB-192 (NCDOT 840.03) STA 19+74.01 T/C=308.90 INV IN=301.50 (CB-193) INV OUT=300.82	JB-134 STA. 17+54.45 T/C=305.70 INV IN=298.39 (CB-135A) INV OUT=298.29
CB-133 (NCDOT 840.03) STA 17+27.83 T/C=306.55 INV IN=298.06 (JB-134) INV OUT=297.97	CB-193 (NCDOT 840.03) STA 19+74.31 T/C=308.91 INV IN=301.87 (CB-194) INV OUT=301.77	FES-196 INV=309.75
CB-146 (NCDOT 840.03) STA 18+19.83 T/C=306.54 INV IN=297.30 (CB-148) INV IN=297.30 (CB-147) INV OUT=297.10	CB-194 (NCDOT 840.03) STA 21+08.65 T/C=312.98 INV IN=307.50 (FES-196) INV IN=305.75 (JB-195) INV OUT=304.56	

EASEMENT LEGEND

- (DE) STORM DRAINAGE EASEMENT
- (UE) CITY OF RALEIGH WATERLINE EASEMENT
- (SSE) CITY OF RALEIGH SANITARY SEWER EASEMENT
- (AE) PUBLIC ACCESS EASEMENT

GRAPHIC SCALE
0 20 40 80
1 inch = 40 ft.

OAKWOOD STREET

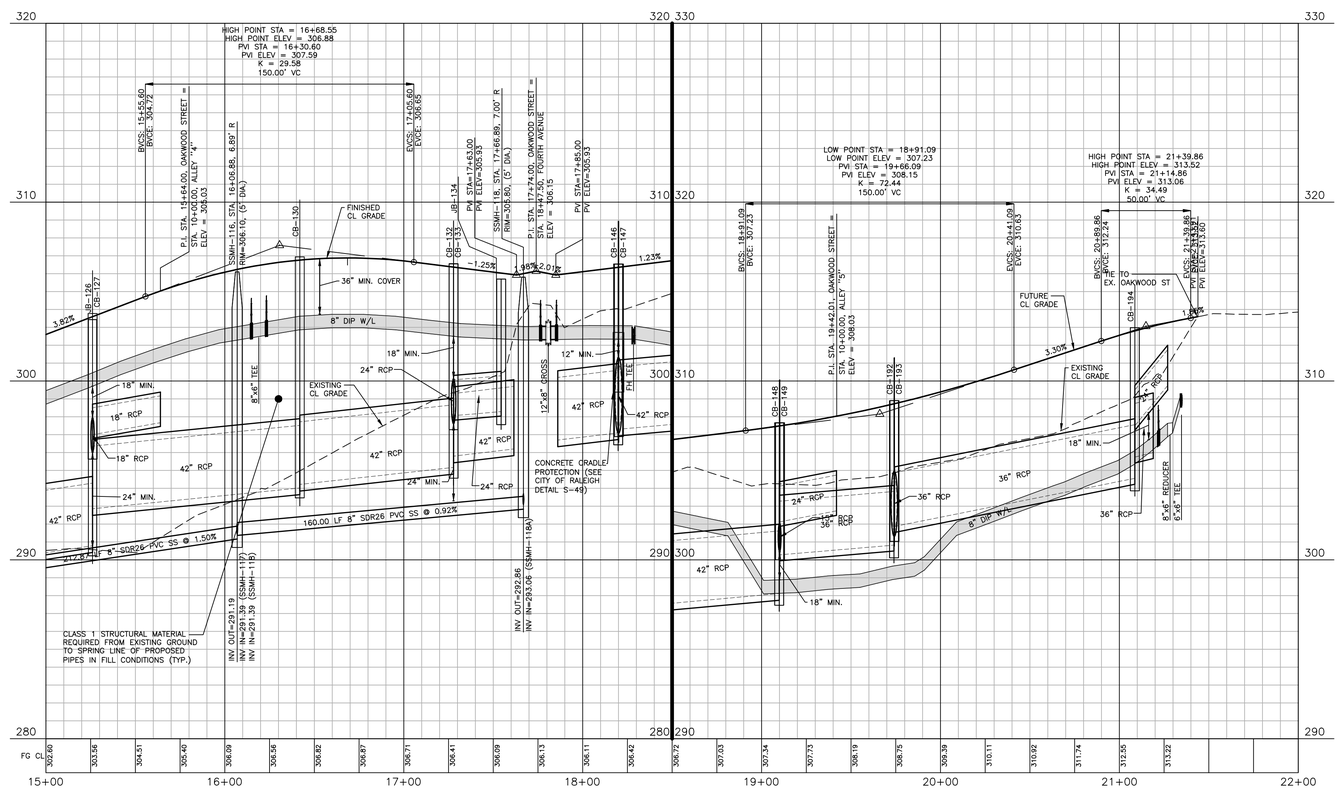

CITY OF RALEIGH – PLANS AUTHORIZED FOR CONSTRUCTION

Plans for the proposed use have been reviewed for general compliance with applicable codes. This limited review, and authorization for construction is not to be considered to represent total compliance with all legal requirements for development and construction. The property owner, design consultants, and contractors are each responsible for compliance with all applicable City, State and Federal laws. This specific authorization below is not a permit, nor shall it be construed to permit any violation of City, State or Federal Law. All Construction must be in accordance with all Local, State, and Federal Rules and Regulations.

Electronic Approval: This approval is being issued electronically. This approval is valid only upon the signature of a City of Raleigh Review Officer below. The City will retain a copy of the approved plans. Any work authorized by this approval must proceed in accordance with the plans kept on file with the City. This electronic approval may not be edited once issued. Any modification to this approval once issued will invalidate this approval.

City of Raleigh Development Approval _____
City of Raleigh Review Officer

SITE PERMITTING APPROVAL

Water and Sewer Permits (If applicable)

The City of Raleigh consents to the connection and extension of the City's Public Sewer System as shown on this plan. The material and Construction methods used for this project shall conform to the standards and specifications of the City's Public Utilities Handbook. City of Raleigh Public Utilities Department Permit # S-5378

The City of Raleigh consents to the connection and extension of the City's Public Water System as shown on this plan. The material and Construction methods used for this project shall conform to the standards and specifications of the City's Public Utilities Handbook. City of Raleigh Public Utilities Department Permit # W-4073

The City of Raleigh consents to the connection to its public sewer system and extension of the private sewer collection system as shown on this plan. The material and constructions methods used for this project shall conform to the standards and specifications of the City's Public Utilities Handbook.
City of Raleigh Public Utilities Department Permit # _____

SEE SHEET C0.01 FOR ALL PROJECT, SITE, GRADING, STORM DRAINAGE AND UTILITY NOTES

ALL CONSTRUCTION SHALL BE IN ACCORDANCE WITH THE CURRENT TOWN OF KNIGHTDALE, CITY OF RALEIGH PUBLIC UTILITIES, AND NCDOT (WHERE APPLICABLE) ENGINEERING DESIGN AND CONSTRUCTION STANDARDS

Town Certification. This design has been reviewed by the Engineer for the Town of Knightdale, and to the best of my knowledge and belief, it conforms to the requirements established in the Standard Specifications of the Town of Knightdale.
By: _____ Date: _____
Town Engineer
These plans are approved by the Town of Knightdale and serve as construction plans for this project.
By: _____ Date: _____
Administrator

FINAL DRAWING - RELEASED FOR CONSTRUCTION

The John R. McAdams Company, Inc.
2905 Meridian Parkway
Durham, NC 27713

phone 919. 361. 5000
fax 919. 361. 2269
license number: C-0293, C-187

www.mcadamsco.com

CLIENT

ALLIANCE GROUP OF NC, LLC
7208 FALLS OF NEUSE RD, SUITE 101
RALEIGH, NORTH CAROLINA 27615
JACOB ANDERSON
PHONE: 919. 239. 9486

REVISIONS

NO.	DATE	
1	----	----
2	----	----
3	----	----
4	----	----
5	----	----
6	----	----

NORTH CAROLINA PROFESSIONAL SEAL 051536 ENGINEER TYLER E. PROBST

DOWNTOWN NORTH AT KNIGHTDALE STATION

CONSTRUCTION DRAWINGS - PHASE 1

N SMITHFIELD ROAD

KNIGHTDALE, NORTH CAROLINA

PLAN INFORMATION

PROJECT NO.	AGN-21002
FILENAME	AGN21002-P1
CHECKED BY	JCM / TEP
DRAWN BY	MRC / LRS / RAD
SCALE	1" = 40'/1" = 4'
DATE	02. 16. 2024

PLAN AND PROFILE
OAKWOOD STREET
STA. 15+00 THRU STA. 22+00

C5.07

M:\Projects\AGN\AGN21002\04-Production\Engineering\Current Drawings\Construction Drawings Sets\Phase-1\AGN21002-P1.dwg, 2/19/2024 2:40:48 PM, Megan Clifford

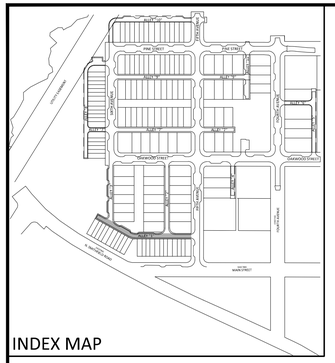

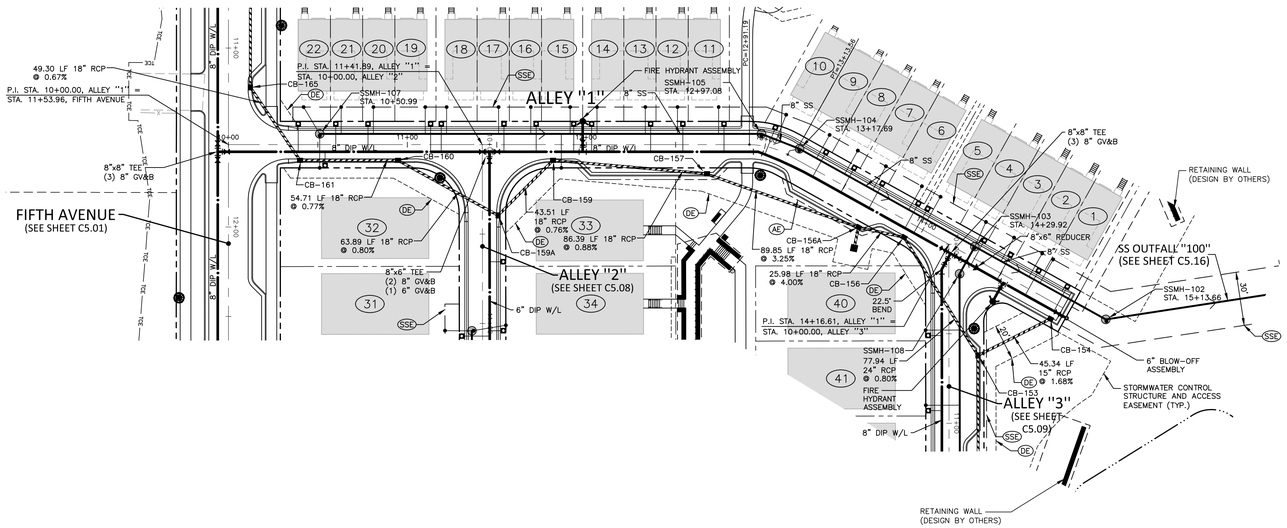

STORM DRAINAGE STRUCTURE TABLE:

CB-154 (NCDOT 840.03) STA 14+86.51 T/C=289.78 INV OUT=285.00	CB-159 (NCDOT 840.03) STA 11+81.44 T/C=300.76 INV IN=290.03 (CB-159A) INV OUT=289.93
CB-156 (NCDOT 840.03) STA 13+92.82 T/C=293.15 INV IN=281.85 (Y1-172) INV IN=285.01 (CB-156A) INV OUT=281.51	CB-160 (NCDOT 840.03) STA 10+94.71 T/C=303.11 INV IN=291.12 (CB-161) INV OUT=290.87
CB-156A (NCDOT 840.03) STA 13+67.94 T/C=293.90 INV IN=286.15 (CB-157) INV IN=286.50 (CB-158) INV OUT=286.05	CB-161 (NCDOT 840.03) STA 10+40.00 T/C=302.65 INV IN=291.61 (CB-165) INV OUT=291.54
CB-157 (NCDOT 840.03) STA 12+67.50 T/C=297.51 INV IN=289.17 (CB-159) INV OUT=289.07	

LEGEND

SCM STORMWATER CONTROL MEASURE

EASEMENT LEGEND

- DE STORM DRAINAGE EASEMENT
- UE CITY OF RALEIGH WATERLINE EASEMENT
- SSE CITY OF RALEIGH SANITARY SEWER EASEMENT
- AE PUBLIC ACCESS EASEMENT

GRAPHIC SCALE
0 20 40 80
1 inch = 40 ft.

ALLEY "1"

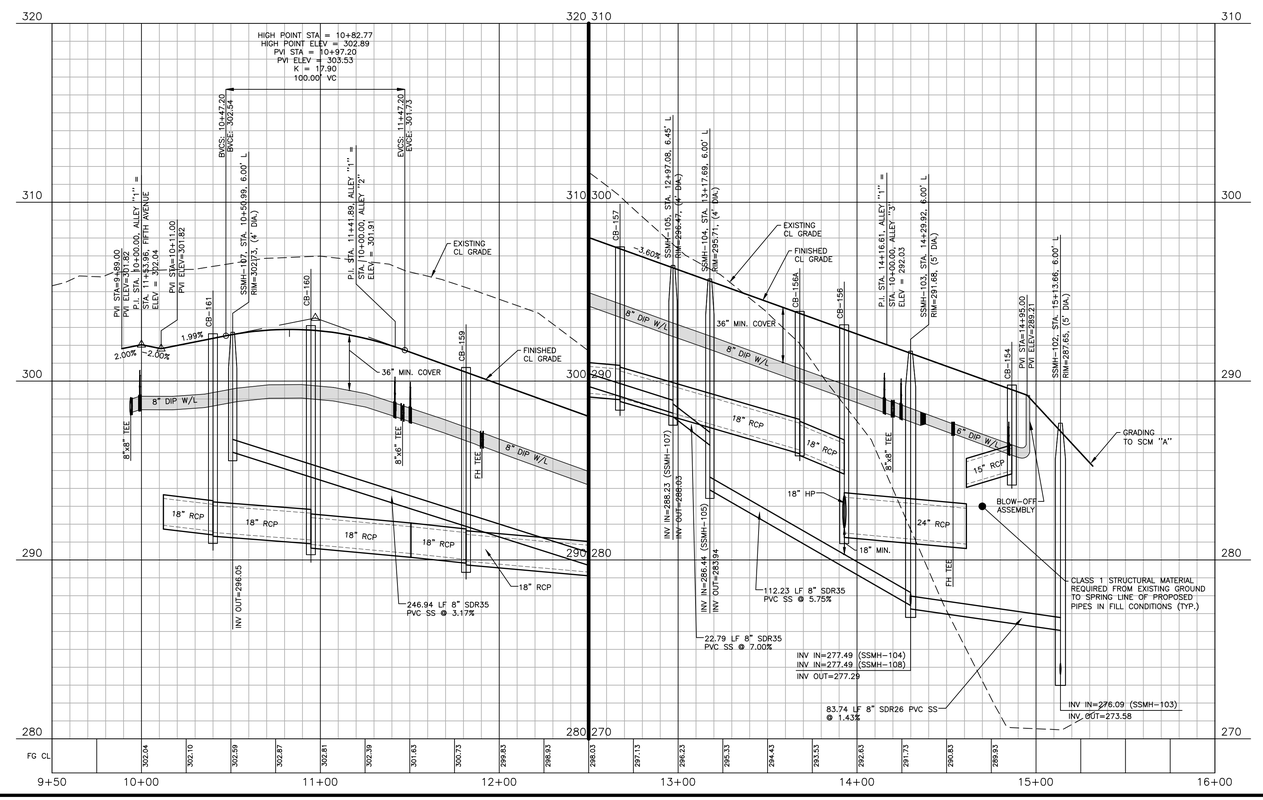

CITY OF RALEIGH – PLANS AUTHORIZED FOR CONSTRUCTION

Plans for the proposed use have been reviewed for general compliance with applicable codes. This limited review, and authorization for construction is not to be considered to represent total compliance with all legal requirements for development and construction. The property owner, design consultants, and contractors are each responsible for compliance with all applicable City, State and Federal laws. This specific authorization below is not a permit, nor shall it be construed to permit any violation of City, State or Federal Law. All Construction must be in accordance with all Local, State, and Federal Rules and Regulations.

Electronic Approval: This approval is being issued electronically. This approval is valid only upon the signature of a City of Raleigh Review Officer below. The City will retain a copy of the approved plans. Any work authorized by this approval must proceed in accordance with the plans kept on file with the City. This electronic approval may not be edited once issued. Any modification to this approval once issued will invalidate this approval.

City of Raleigh Development Approval _____
City of Raleigh Review Officer

SITE PERMITTING APPROVAL

Water and Sewer Permits (If applicable)

The City of Raleigh consents to the connection and extension of the City's Public Sewer System as shown on this plan. The material and Construction methods used for this project shall conform to the standards and specifications of the City's Public Utilities Handbook. City of Raleigh Public Utilities Department Permit # S-5378

The City of Raleigh consents to the connection and extension of the City's Public Water System as shown on this plan. The material and Construction methods used for this project shall conform to the standards and specifications of the City's Public Utilities Handbook. City of Raleigh Public Utilities Department Permit # W-4073

The City of Raleigh consents to the connection to its public sewer system and extension of the private sewer collection system as shown on this plan. The material and constructions methods used for this project shall conform to the standards and specifications of the City's Public Utilities Handbook.
City of Raleigh Public Utilities Department Permit # _____

SEE SHEET C0.01 FOR ALL PROJECT, SITE, GRADING, STORM DRAINAGE AND UTILITY NOTES

ALL CONSTRUCTION SHALL BE IN ACCORDANCE WITH THE CURRENT TOWN OF KNIGHTDALE, CITY OF RALEIGH PUBLIC UTILITIES, AND NCDOT (WHERE APPLICABLE) ENGINEERING DESIGN AND CONSTRUCTION STANDARDS

Town Certification. This design has been reviewed by the Engineer for the Town of Knightdale, and to the best of my knowledge and belief, it conforms to the requirements established in the Standard Specifications of the Town of Knightdale.
By: _____ Date: _____
Town Engineer
These plans are approved by the Town of Knightdale and serve as construction plans for this project.
By: _____ Date: _____
Administrator

FINAL DRAWING - RELEASED FOR CONSTRUCTION

McADAMS

The John R. McAdams Company, Inc.
2905 Meridian Parkway
Durham, NC 27713

phone 919. 361. 5000
fax 919. 361. 2269
license number: C-0293, C-187

www.mcadamsco.com

CLIENT
ALLIANCE GROUP OF NC, LLC
7208 FALLS OF NEUSE RD, SUITE 101
RALEIGH, NORTH CAROLINA 27615
JACOB ANDERSON
PHONE: 919. 239. 9486

AGNC

REVISIONS

NO.	DATE	
1	----	----
2	----	----
3	----	----
4	----	----
5	----	----
6	----	----

NORTH CAROLINA PROFESSIONAL SEAL 051536 ENGINEER TYLER E. PROEST

DOWNTOWN NORTH AT KNIGHTDALE STATION

CONSTRUCTION DRAWINGS - PHASE 1

N SMITHFIELD ROAD

KNIGHTDALE, NORTH CAROLINA

PLAN INFORMATION

PROJECT NO.	AGN-21002
FILENAME	AGN21002-P2
CHECKED BY	JCM / TEP
DRAWN BY	MRC / LRS / RAD
SCALE	1" = 40'/1" = 4'
DATE	02. 16. 2024

PLAN AND PROFILE
ALLEY "1"
STA. 9+50 THRU STA. 16+00

C5.08

M:\Projects\AGN\AGN21002\04-Production\Engineering\Current Drawings\Construction Drawings Set\Phase-1\AGN21002-P2.dwg, 2/19/2024 3:01:06 PM, Megan Clifford

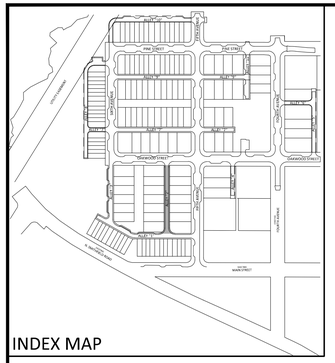

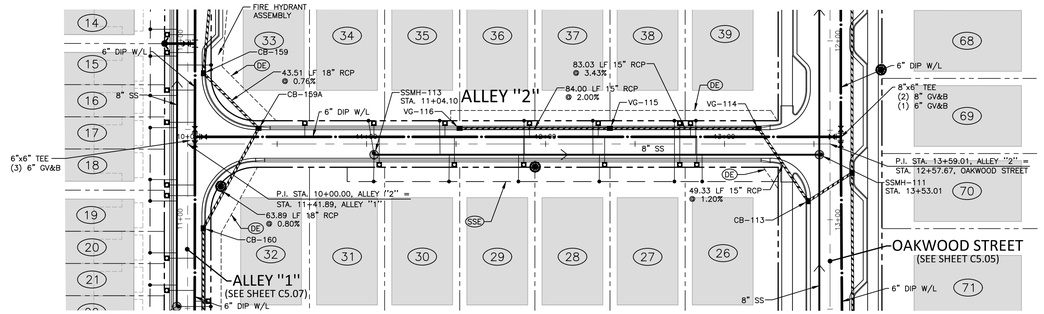

STORM DRAINAGE STRUCTURE TABLE:

CB-159A (NCDOT 840.03) STA 10+39.55 T/C=303.35 INV IN=290.36 (CB-160) INV OUT=290.36
VG-114 (VALLEY GRATE) STA 13+18.97 T/C=299.78 INV IN=292.10 (VG-115) INV OUT=292.00
VG-115 (VALLEY GRATE) STA 12+35.94 T/C=302.07 INV IN=295.05 (VG-116) INV OUT=294.95
VG-116 (VALLEY GRATE) STA 11+51.94 T/C=304.39 INV OUT=296.73

EASEMENT LEGEND

- (DE) STORM DRAINAGE EASEMENT
- (UE) CITY OF RALEIGH WATERLINE EASEMENT
- (SSE) CITY OF RALEIGH SANITARY SEWER EASEMENT
- (AE) PUBLIC ACCESS EASEMENT

GRAPHIC SCALE
0 20 40 80
1 inch = 40 ft.

ALLEY "2"

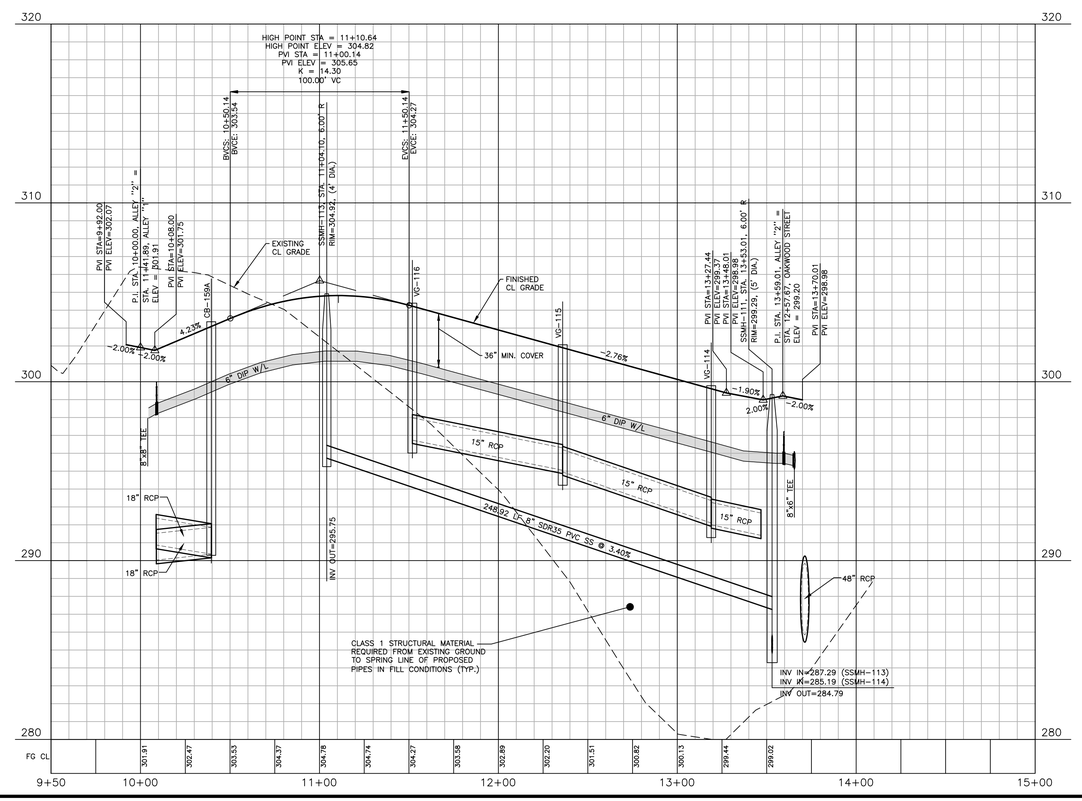

CITY OF RALEIGH – PLANS AUTHORIZED FOR CONSTRUCTION

Plans for the proposed use have been reviewed for general compliance with applicable codes. This limited review, and authorization for construction is not to be considered to represent total compliance with all legal requirements for development and construction. The property owner, design consultants, and contractors are each responsible for compliance with all applicable City, State and Federal laws. This specific authorization below is not a permit, nor shall it be construed to permit any violation of City, State or Federal Law. All Construction must be in accordance with all Local, State, and Federal Rules and Regulations.

Electronic Approval: This approval is being issued electronically. This approval is valid only upon the signature of a City of Raleigh Review Officer below. The City will retain a copy of the approved plans. Any work authorized by this approval must proceed in accordance with the plans kept on file with the City. This electronic approval may not be edited once issued. Any modification to this approval once issued will invalidate this approval.

City of Raleigh Development Approval _____
City of Raleigh Review Officer

SITE PERMITTING APPROVAL

Water and Sewer Permits (If applicable)

The City of Raleigh consents to the connection and extension of the City's Public Sewer System as shown on this plan. The material and Construction methods used for this project shall conform to the standards and specifications of the City's Public Utilities Handbook. City of Raleigh Public Utilities Department Permit # S-5378

The City of Raleigh consents to the connection and extension of the City's Public Water System as shown on this plan. The material and Construction methods used for this project shall conform to the standards and specifications of the City's Public Utilities Handbook. City of Raleigh Public Utilities Department Permit # W-4073

The City of Raleigh consents to the connection to its public sewer system and extension of the private sewer collection system as shown on this plan. The material and constructions methods used for this project shall conform to the standards and specifications of the City's Public Utilities Handbook.
City of Raleigh Public Utilities Department Permit # _____

SEE SHEET C0.01 FOR ALL PROJECT, SITE, GRADING, STORM DRAINAGE AND UTILITY NOTES

ALL CONSTRUCTION SHALL BE IN ACCORDANCE WITH THE CURRENT TOWN OF KNIGHTDALE, CITY OF RALEIGH PUBLIC UTILITIES, AND NCDOT (WHERE APPLICABLE) ENGINEERING DESIGN AND CONSTRUCTION STANDARDS

Town Certification. This design has been reviewed by the Engineer for the Town of Knightdale, and to the best of my knowledge and belief, it conforms to the requirements established in the Standard Specifications of the Town of Knightdale.
By: _____ Date: _____
Town Engineer
These plans are approved by the Town of Knightdale and serve as construction plans for this project.
By: _____ Date: _____
Administrator

FINAL DRAWING - RELEASED FOR CONSTRUCTION

M:\Projects\AGN\AGN21002\04-Production\Engineering\Current Drawings\Construction Drawings Set\Phase-1\AGN21002-P2.dwg, 2/19/2024 3:04:15 PM, Megan Clifford

McADAMS

The John R. McAdams Company, Inc.
2905 Meridian Parkway
Durham, NC 27713

phone 919. 361. 5000
fax 919. 361. 2269
license number: C-0293, C-187

www.mcadamsco.com

CLIENT
ALLIANCE GROUP OF NC, LLC
7208 FALLS OF NEUSE RD, SUITE 101
RALEIGH, NORTH CAROLINA 27615
JACOB ANDERSON
PHONE: 919. 239. 9486

AGNC BROKERAGE | CONSULTING | PLANNING

REVISIONS

NO.	DATE	
1	----	----
2	----	----
3	----	----
4	----	----
5	----	----
6	----	----

NORTH CAROLINA PROFESSIONAL SEAL 051536 ENGINEER TYLER E. PROBST

DOWNTOWN NORTH AT KNIGHTDALE STATION

CONSTRUCTION DRAWINGS - PHASE 1

N SMITHFIELD ROAD

KNIGHTDALE, NORTH CAROLINA

PLAN INFORMATION

PROJECT NO.	AGN-21002
FILENAME	AGN21002-P2
CHECKED BY	JCM / TEP
DRAWN BY	MRC / LRS / RAD
SCALE	1" = 40'/1" = 4'
DATE	02. 16. 2024

PLAN AND PROFILE
ALLEY "2"
STA. 9+50 THRU STA. 15+00

C5.09

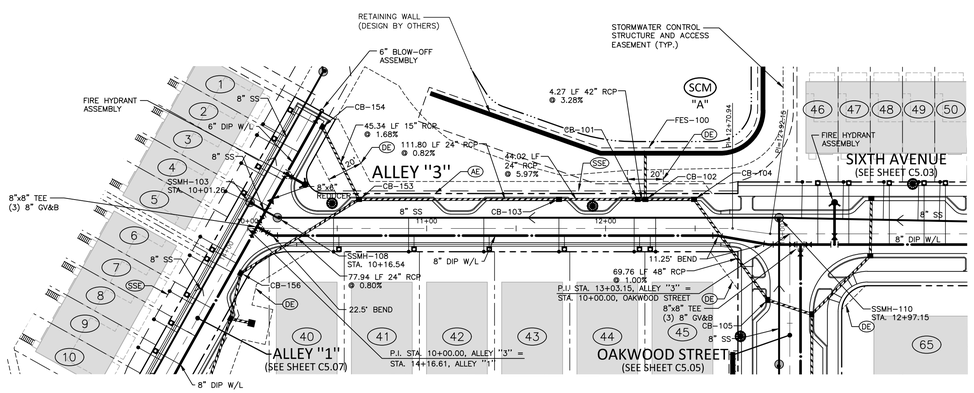

STORM DRAINAGE STRUCTURE TABLE:

CB-101 (NCDOT 840.03)
STA 12+17.96
T/C=289.09
INV IN=277.14 (CB-103)
INV OUT=275.64

CB-102 (NCDOT 840.03)
STA 12+22.24
T/C=289.07
INV IN=269.75 (CB-104)
INV IN=275.50 (CB-101)
INV OUT=268.75

CB-103 (NCDOT 840.03)
STA 11+73.94
T/C=289.64
INV IN=279.87 (CB-153)
INV OUT=279.77

CB-104 (NCDOT 840.03)
STA 12+49.45
T/C=289.36
INV IN=272.45 (CB-105)
INV OUT=270.35

CB-153 (NCDOT 840.03)
STA 10+62.14
T/C=291.12
INV IN=280.89 (CB-156)
INV IN=284.24 (CB-154)
INV OUT=280.79

LEGEND

SCM STORMWATER CONTROL MEASURE

GRAPHIC SCALE
0 20 40 80
1 inch = 40 ft.

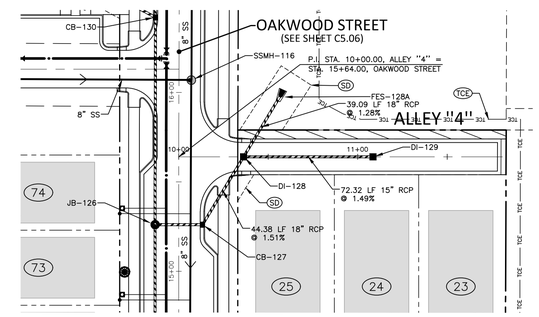

STORM DRAINAGE STRUCTURE TABLE:

DI-128 (NCDOT 840.16)
STA 10+36.25
T/G=305.17
INV IN=289.42 (DI-129)
INV IN=298.00 (FES-128A)
INV OUT=297.67

DI-129 (NCDOT 840.16)
STA 11+08.58
T/G=306.96
INV OUT=300.50

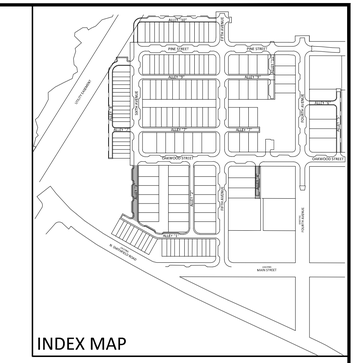

EASEMENT LEGEND

DE STORM DRAINAGE EASEMENT
UE CITY OF RALEIGH WATERLINE EASEMENT
SSE CITY OF RALEIGH SANITARY SEWER EASEMENT
AE PUBLIC ACCESS EASEMENT

GRAPHIC SCALE
0 20 40 80
1 inch = 40 ft.

ALLEY "3"

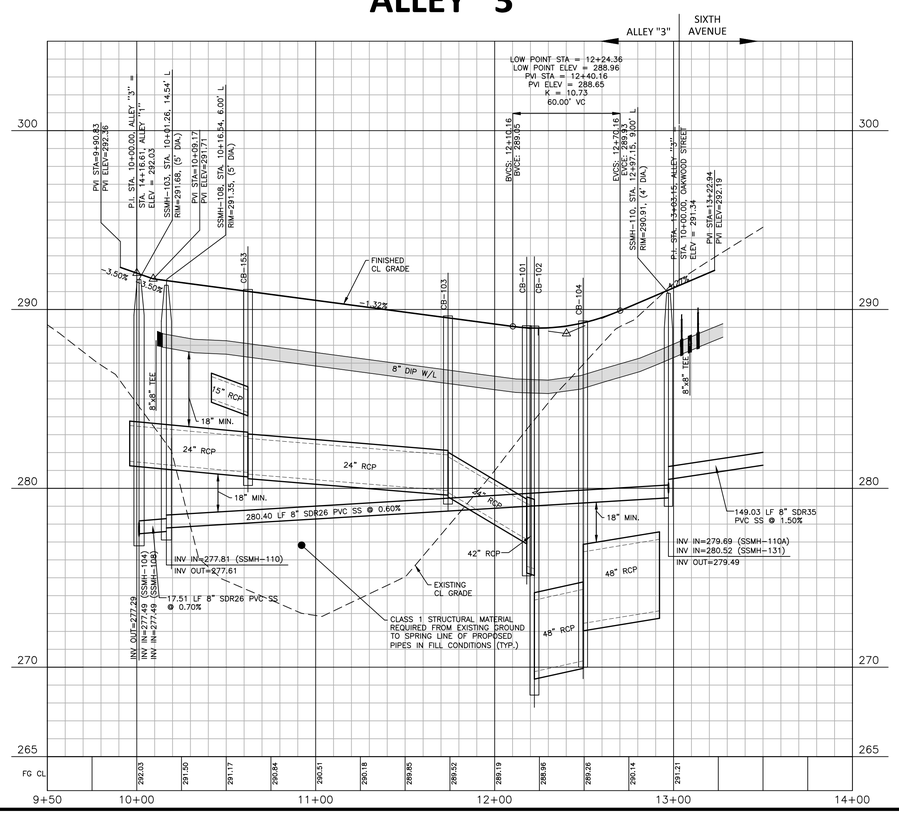

ALLEY "4"

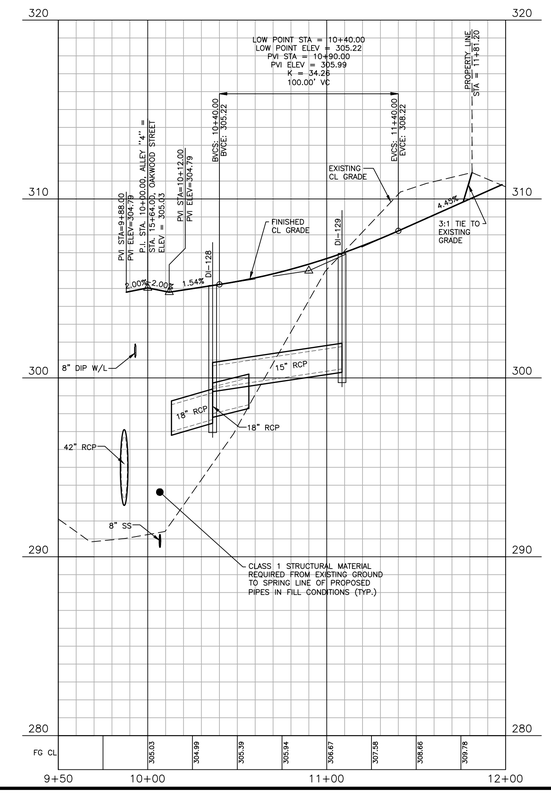

CITY OF RALEIGH – PLANS AUTHORIZED FOR CONSTRUCTION

Plans for the proposed use have been reviewed for general compliance with applicable codes. This limited review, and authorization for construction is not to be considered to represent total compliance with all legal requirements for development and construction. The property owner, design consultants, and contractors are each responsible for compliance with all applicable City, State and Federal laws. This specific authorization below is not a permit, nor shall it be construed to permit any violation of City, State or Federal Law. All Construction must be in accordance with all Local, State, and Federal Rules and Regulations.

Electronic Approval: This approval is being issued electronically. This approval is valid only upon the signature of a City of Raleigh Review Officer below. The City will retain a copy of the approved plans. Any work authorized by this approval must proceed in accordance with the plans kept on file with the City. This electronic approval may not be edited once issued. Any modification to this approval once issued will invalidate this approval.

City of Raleigh Development Approval _____
City of Raleigh Review Officer

SITE PERMITTING APPROVAL

Water and Sewer Permits (If applicable)

The City of Raleigh consents to the connection and extension of the City's Public Sewer System as shown on this plan. The material and Construction methods used for this project shall conform to the standards and specifications of the City's Public Utilities Handbook. City of Raleigh Public Utilities Department Permit # S-5378

The City of Raleigh consents to the connection and extension of the City's Public Water System as shown on this plan. The material and Construction methods used for this project shall conform to the standards and specifications of the City's Public Utilities Handbook. City of Raleigh Public Utilities Department Permit # W-4073

The City of Raleigh consents to the connection to its public sewer system and extension of the private sewer collection system as shown on this plan. The material and constructions methods used for this project shall conform to the standards and specifications of the City's Public Utilities Handbook.
City of Raleigh Public Utilities Department Permit # _____

SEE SHEET C0.01 FOR ALL PROJECT, SITE, GRADING, STORM DRAINAGE AND UTILITY NOTES

ALL CONSTRUCTION SHALL BE IN ACCORDANCE WITH THE CURRENT TOWN OF KNIGHTDALE, CITY OF RALEIGH PUBLIC UTILITIES, AND NCDOT (WHERE APPLICABLE) ENGINEERING DESIGN AND CONSTRUCTION STANDARDS

Town Certification. This design has been reviewed by the Engineer for the Town of Knightdale, and to the best of my knowledge and belief, it conforms to the requirements established in the Standard Specifications of the Town of Knightdale.
By: _____ Date: _____
Town Engineer
These plans are approved by the Town of Knightdale and serve as construction plans for this project.
By: _____ Date: _____
Administrator

FINAL DRAWING - RELEASED FOR CONSTRUCTION

M:\Projects\AGN\AGN21002\04-Production\Engineering\Current Drawings\Construction Drawings Set\Phase-1\AGN21002-P2.dwg, 2/19/2024 3:06:55 PM, Megan Clifford

The John R. McAdams Company, Inc.
2905 Meridian Parkway
Durham, NC 27713

phone 919. 361. 5000
fax 919. 361. 2269
license number: C-0293, C-187

www.mcadamsco.com

CLIENT

ALLIANCE GROUP OF NC, LLC
7208 FALLS OF NEUSE RD, SUITE 101
RALEIGH, NORTH CAROLINA 27615
JACOB ANDERSON
PHONE: 919. 239. 9486

REVISIONS

NO.	DATE	
1	-----	-----
2	-----	-----
3	-----	-----
4	-----	-----
5	-----	-----
6	-----	-----

NORTH CAROLINA PROFESSIONAL SEAL 051536 ENGINEER TYLER E. PROBST

DOWNTOWN NORTH AT KNIGHTDALE STATION

CONSTRUCTION DRAWINGS - PHASE 1

N SMITHFIELD ROAD

KNIGHTDALE, NORTH CAROLINA

PLAN INFORMATION

PROJECT NO.	AGN-21002
FILENAME	AGN21002-P2
CHECKED BY	JCM / TEP
DRAWN BY	MRC / LRS / RAD
SCALE	1" = 40'/1" = 4'
DATE	02. 16. 2024

PLAN AND PROFILE

ALLEY "3", STA. 9+50 THRU STA. 14+00
ALLEY "4", STA. 9+50 THRU STA. 12+00

C5.10

STORM DRAINAGE STRUCTURE TABLE:

DI-150 (NCDOT 840.16)
STA 10+38.76
T/G=308.37
INV IN=303.49 (DI-150A)
INV IN=303.94 (DI-150C)
INV OUT=302.74

DI-150A (NCDOT 840.16)
STA 10+99.51
T/G=311.84
INV IN=306.29 (DI-151)
INV OUT=306.19

DI-151 (NCDOT 840.16)
STA 11+43.51
T/G=314.70
INV IN=308.90 (DI-151A)
INV OUT=308.80

DI-151A (NCDOT 840.16)
STA 11+87.51
T/G=317.56
INV IN=310.83 (DI-152)
INV OUT=310.73

DI-152 (NCDOT 840.16)
STA 12+63.51
T/G=322.50
INV OUT=315.00

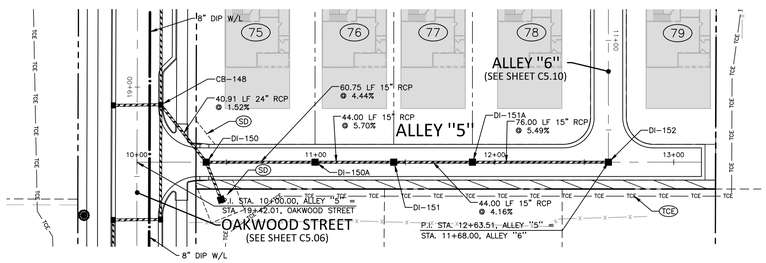

GRAPHIC SCALE
0 20 40 80
1 inch = 40 ft.

STORM DRAINAGE STRUCTURE TABLE:

DI-142 (NCDOT 840.16)
STA 10+38.07
T/G=319.01
INV OUT=314.50

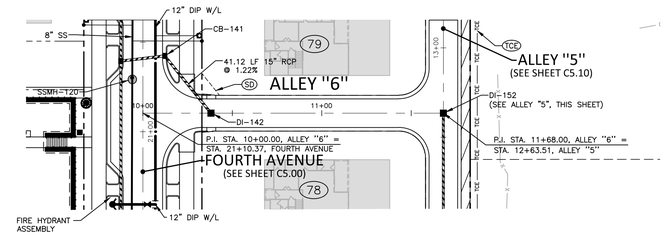

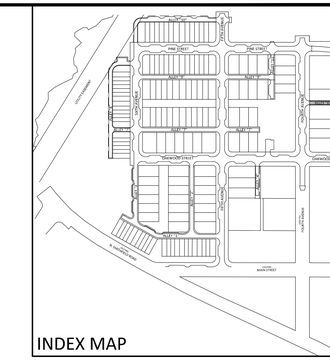

EASEMENT LEGEND

- (DE) STORM DRAINAGE EASEMENT
- (UE) CITY OF RALEIGH WATERLINE EASEMENT
- (SSE) CITY OF RALEIGH SANITARY SEWER EASEMENT
- (AE) PUBLIC ACCESS EASEMENT

GRAPHIC SCALE
0 20 40 80
1 inch = 40 ft.

ALLEY "5"

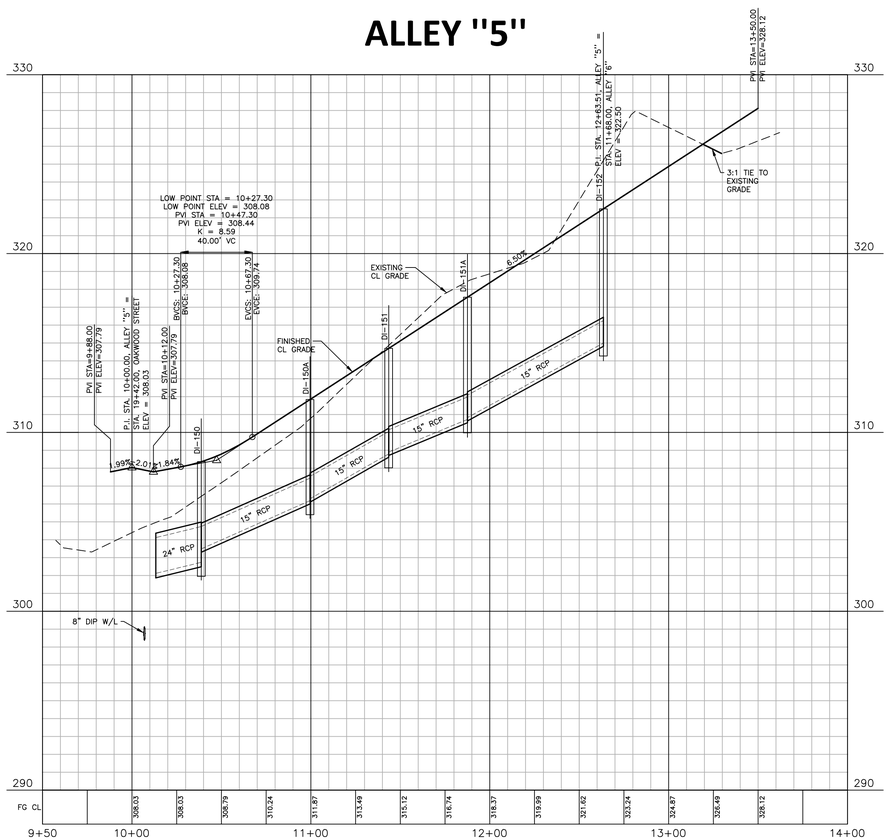

ALLEY "6"

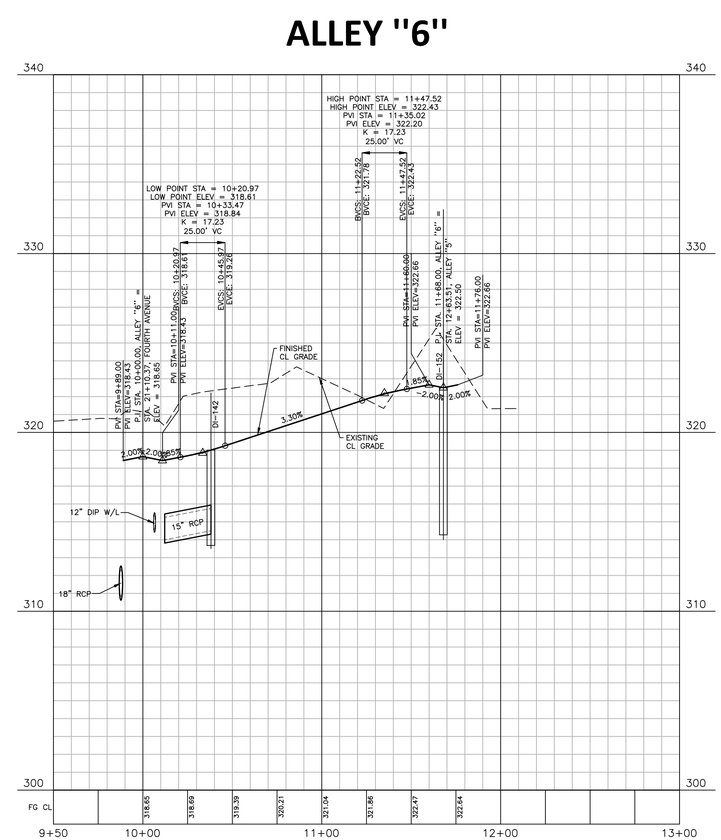

CITY OF RALEIGH – PLANS AUTHORIZED FOR CONSTRUCTION

Plans for the proposed use have been reviewed for general compliance with applicable codes. This limited review, and authorization for construction is not to be considered to represent total compliance with all legal requirements for development and construction. The property owner, design consultants, and contractors are each responsible for compliance with all applicable City, State and Federal laws. This specific authorization below is not a permit, nor shall it be construed to permit any violation of City, State or Federal Law. All Construction must be in accordance with all Local, State, and Federal Rules and Regulations.

Electronic Approval: This approval is being issued electronically. This approval is valid only upon the signature of a City of Raleigh Review Officer below. The City will retain a copy of the approved plans. Any work authorized by this approval must proceed in accordance with the plans kept on file with the City. This electronic approval may not be edited once issued. Any modification to this approval once issued will invalidate this approval.

City of Raleigh Development Approval _____
City of Raleigh Review Officer

SITE PERMITTING APPROVAL

Water and Sewer Permits (If applicable)

The City of Raleigh consents to the connection and extension of the City's Public Sewer System as shown on this plan. The material and Construction methods used for this project shall conform to the standards and specifications of the City's Public Utilities Handbook. City of Raleigh Public Utilities Department Permit # S-5378

The City of Raleigh consents to the connection and extension of the City's Public Water System as shown on this plan. The material and Construction methods used for this project shall conform to the standards and specifications of the City's Public Utilities Handbook. City of Raleigh Public Utilities Department Permit # W-4073

The City of Raleigh consents to the connection to its public sewer system and extension of the private sewer collection system as shown on this plan. The material and constructions methods used for this project shall conform to the standards and specifications of the City's Public Utilities Handbook.
City of Raleigh Public Utilities Department Permit # _____

SEE SHEET C0.01 FOR ALL PROJECT, SITE, GRADING, STORM DRAINAGE AND UTILITY NOTES

ALL CONSTRUCTION SHALL BE IN ACCORDANCE WITH THE CURRENT TOWN OF KNIGHTDALE, CITY OF RALEIGH PUBLIC UTILITIES, AND NCDOT (WHERE APPLICABLE) ENGINEERING DESIGN AND CONSTRUCTION STANDARDS

Town Certification. This design has been reviewed by the Engineer for the Town of Knightdale, and to the best of my knowledge and belief, it conforms to the requirements established in the Standard Specifications of the Town of Knightdale.
By: _____ Date: _____
Town Engineer
These plans are approved by the Town of Knightdale and serve as construction plans for this project.
By: _____ Date: _____
Administrator

FINAL DRAWING - RELEASED FOR CONSTRUCTION

The John R. McAdams Company, Inc.
2905 Meridian Parkway
Durham, NC 27713

phone 919. 361. 5000
fax 919. 361. 2269
license number: C-0293, C-187

www.mcadamsco.com

CLIENT

ALLIANCE GROUP OF NC, LLC
7208 FALLS OF NEUSE RD, SUITE 101
RALEIGH, NORTH CAROLINA 27615
JACOB ANDERSON
PHONE: 919. 239. 9486

REVISIONS

NO.	DATE	
1	----	----
2	----	----
3	----	----
4	----	----
5	----	----
6	----	----

NORTH CAROLINA PROFESSIONAL SEAL 051536 ENGINEER TYLER E. PROBST

DOWNTOWN NORTH AT KNIGHTDALE STATION

CONSTRUCTION DRAWINGS - PHASE 1

N SMITHFIELD ROAD

KNIGHTDALE, NORTH CAROLINA

PLAN INFORMATION

PROJECT NO.	AGN-21002
FILENAME	AGN21002-P2
CHECKED BY	JCM / TEP
DRAWN BY	MRC / LRS / RAD
SCALE	1" = 40'/1" = 4'
DATE	02. 16. 2024

PLAN AND PROFILE

ALLEY "5", STA. 9+50 THRU STA. 14+00
ALLEY "6", STA. 9+50 THRU STA. 13+00

C5.11

M:\Projects\AGN\AGN21002\04-Production\Engineering\Current Drawings\Construction Drawings Sets\Phase-1\AGN21002-P2.dwg, 2/19/2024 2:47:28 PM, Megan Clifford

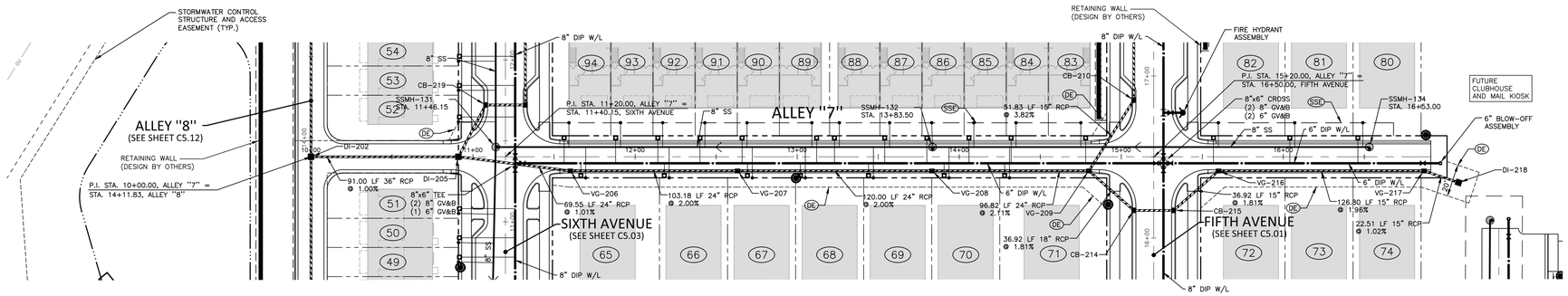

STORM DRAINAGE STRUCTURE TABLE:

DI-202 (NCDOT 840.16) STA 10+00.00 T/G=294.70 INV IN=284.11 (DI-205) INV IN=287.68 (DI-203) INV OUT=283.61	VG-208 (VALLEY GRATE) STA 13+83.18 T/C=301.61 INV IN=292.81 (VG-209) INV OUT=292.71
DI-205 (NCDOT 840.16) STA 10+91.00 T/G=294.94 INV IN=285.50 (CB-219) INV IN=286.70 (VG-206) INV OUT=285.02	VG-209 (VALLEY GRATE) STA 14+80.00 T/C=304.27 INV IN=296.21 (CB-210) INV IN=295.45 (CB-214) INV OUT=294.85
DI-218 (NCDOT 840.16) STA 17+08.14 T/G=306.25 INV OUT=300.50	VG-216 (VALLEY GRATE) STA 15+60.00 T/C=305.13 INV IN=297.70 (VG-217) INV OUT=297.43
VG-206 (VALLEY GRATE) STA 11+60.00 T/C=295.39 INV IN=288.15 (VG-207) INV OUT=287.40	VG-217 (VALLEY GRATE) STA 16+86.80 T/C=306.79 INV IN=300.27 (DI-218) INV OUT=300.19

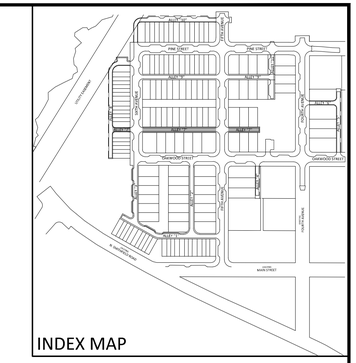

LEGEND

(SCM) STORMWATER CONTROL MEASURE

EASEMENT LEGEND

- (DE) STORM DRAINAGE EASEMENT
- (UE) CITY OF RALEIGH WATERLINE EASEMENT
- (SSE) CITY OF RALEIGH SANITARY SEWER EASEMENT
- (AE) PUBLIC ACCESS EASEMENT

GRAPHIC SCALE
0 20 40 80
1 inch = 40 ft.

ALLEY "7"

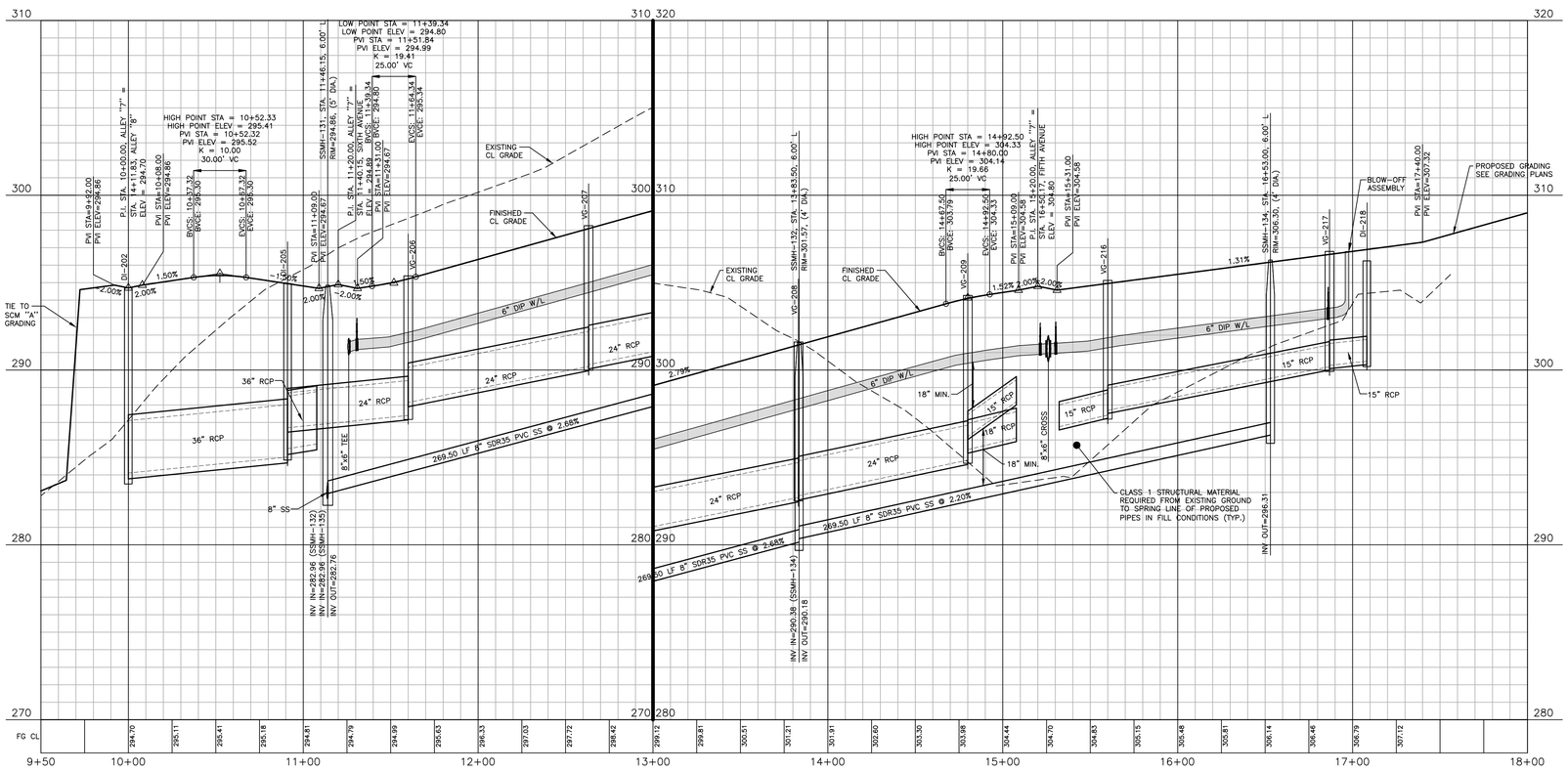

CITY OF RALEIGH – PLANS AUTHORIZED FOR CONSTRUCTION

Plans for the proposed use have been reviewed for general compliance with applicable codes. This limited review, and authorization for construction is not to be considered to represent total compliance with all legal requirements for development and construction. The property owner, design consultants, and contractors are each responsible for compliance with all applicable City, State and Federal laws. This specific authorization below is not a permit, nor shall it be construed to permit any violation of City, State or Federal Law. All Construction must be in accordance with all Local, State, and Federal Rules and Regulations.

Electronic Approval: This approval is being issued electronically. This approval is valid only upon the signature of a City of Raleigh Review Officer below. The City will retain a copy of the approved plans. Any work authorized by this approval must proceed in accordance with the plans kept on file with the City. This electronic approval may not be edited once issued. Any modification to this approval once issued will invalidate this approval.

City of Raleigh Development Approval _____
City of Raleigh Review Officer

SITE PERMITTING APPROVAL

Water and Sewer Permits (If applicable)

The City of Raleigh consents to the connection and extension of the City's Public Sewer System as shown on this plan. The material and Construction methods used for this project shall conform to the standards and specifications of the City's Public Utilities Handbook. City of Raleigh Public Utilities Department Permit # S-6378

The City of Raleigh consents to the connection and extension of the City's Public Water System as shown on this plan. The material and Construction methods used for this project shall conform to the standards and specifications of the City's Public Utilities Handbook. City of Raleigh Public Utilities Department Permit # W-4073

The City of Raleigh consents to the connection to its public sewer system and extension of the private sewer collection system as shown on this plan. The material and constructions methods used for this project shall conform to the standards and specifications of the City's Public Utilities Handbook.
City of Raleigh Public Utilities Department Permit # _____

SEE SHEET C0.01 FOR ALL PROJECT, SITE, GRADING, STORM DRAINAGE AND UTILITY NOTES

ALL CONSTRUCTION SHALL BE IN ACCORDANCE WITH THE CURRENT TOWN OF KNIGHTDALE, CITY OF RALEIGH PUBLIC UTILITIES, AND NCDOT (WHERE APPLICABLE) ENGINEERING DESIGN AND CONSTRUCTION STANDARDS

Town Certification. This design has been reviewed by the Engineer for the Town of Knightdale, and to the best of my knowledge and belief, it conforms to the requirements established in the Standard Specifications of the Town of Knightdale.
By: _____ Date: _____
Town Engineer
These plans are approved by the Town of Knightdale and serve as construction plans for this project.
By: _____ Date: _____
Administrator

FINAL DRAWING - RELEASED FOR CONSTRUCTION

The John R. McAdams Company, Inc.
2905 Meridian Parkway
Durham, NC 27713

phone 919. 361. 5000
fax 919. 361. 2269
license number: C-0293, C-187

www.mcadamsco.com

CLIENT
ALLIANCE GROUP OF NC, LLC
7208 FALLS OF NEUSE RD, SUITE 101
RALEIGH, NORTH CAROLINA 27615
JACOB ANDERSON
PHONE: 919. 239. 9486

REVISIONS

NO.	DATE	
1	----	----
2	----	----
3	----	----
4	----	----
5	----	----
6	----	----

NORTH CAROLINA PROFESSIONAL SEAL 051536 ENGINEER TYLER E. PROBST

DOWNTOWN NORTH AT KNIGHTDALE STATION
CONSTRUCTION DRAWINGS - PHASE 1
N SMITHFIELD ROAD
KNIGHTDALE, NORTH CAROLINA

PLAN INFORMATION

PROJECT NO.	AGN-21002
FILENAME	AGN21002-P2
CHECKED BY	JCM / TEP
DRAWN BY	MRC / LRS / RAD
SCALE	1" = 40'/1" = 4'
DATE	02. 16. 2024

PLAN AND PROFILE
ALLEY "7"
STA. 9+50 THRU STA. 18+00

C5.12

M:\Projects\AGN\AGN21002\04-Production\Engineering\Current Drawings\Construction Drawings Sets\Phase-1\AGN21002-P2.dwg, 7/19/2024 2:49:26 PM, Megan Clifford

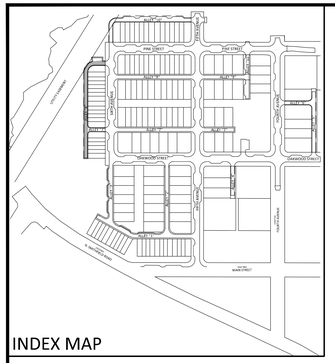

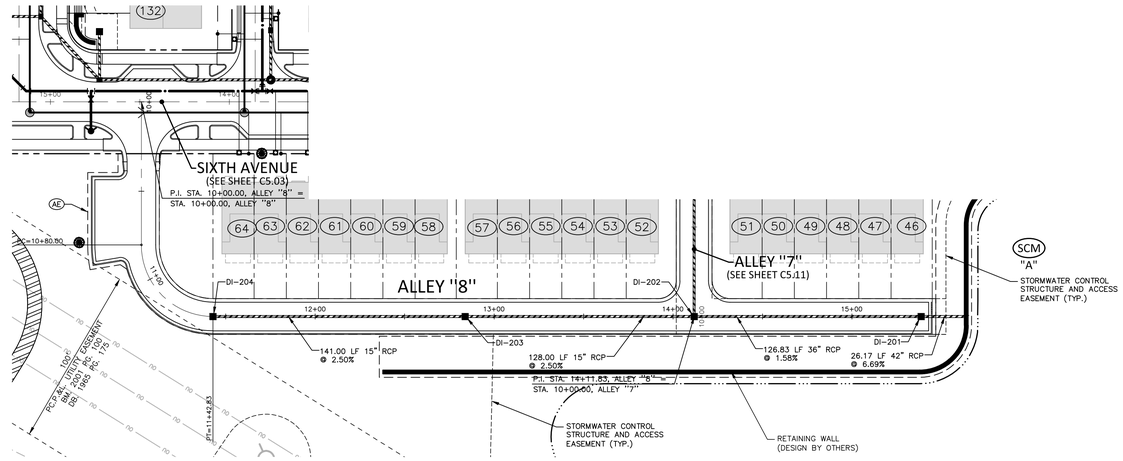

STORM DRAINAGE STRUCTURE TABLE:

DI-201 (NCDOT 840.16)
STA 15+38.66
T/G=290.46
INV IN=281.60 (DI-202)
INV OUT=268.75

DI-202 (NCDOT 840.16)
STA 10+00.00
T/G=294.70
INV IN=284.11 (DI-205)
INV IN=287.68 (DI-203)
INV OUT=283.61

DI-203 (NCDOT 840.16)
STA 12+83.83
T/G=298.10
INV IN=290.98 (DI-204)
INV OUT=290.88

DI-204 (NCDOT 840.16)
STA 11+42.83
T/G=300.40
INV OUT=294.50

LEGEND

SCM STORMWATER CONTROL MEASURE

EASEMENT LEGEND

DE STORM DRAINAGE EASEMENT
UE CITY OF RALEIGH WATERLINE EASEMENT
SSE CITY OF RALEIGH SANITARY SEWER EASEMENT
AE PUBLIC ACCESS EASEMENT

GRAPHIC SCALE
0 20 40 80
1 inch = 40 ft.

ALLEY "8"

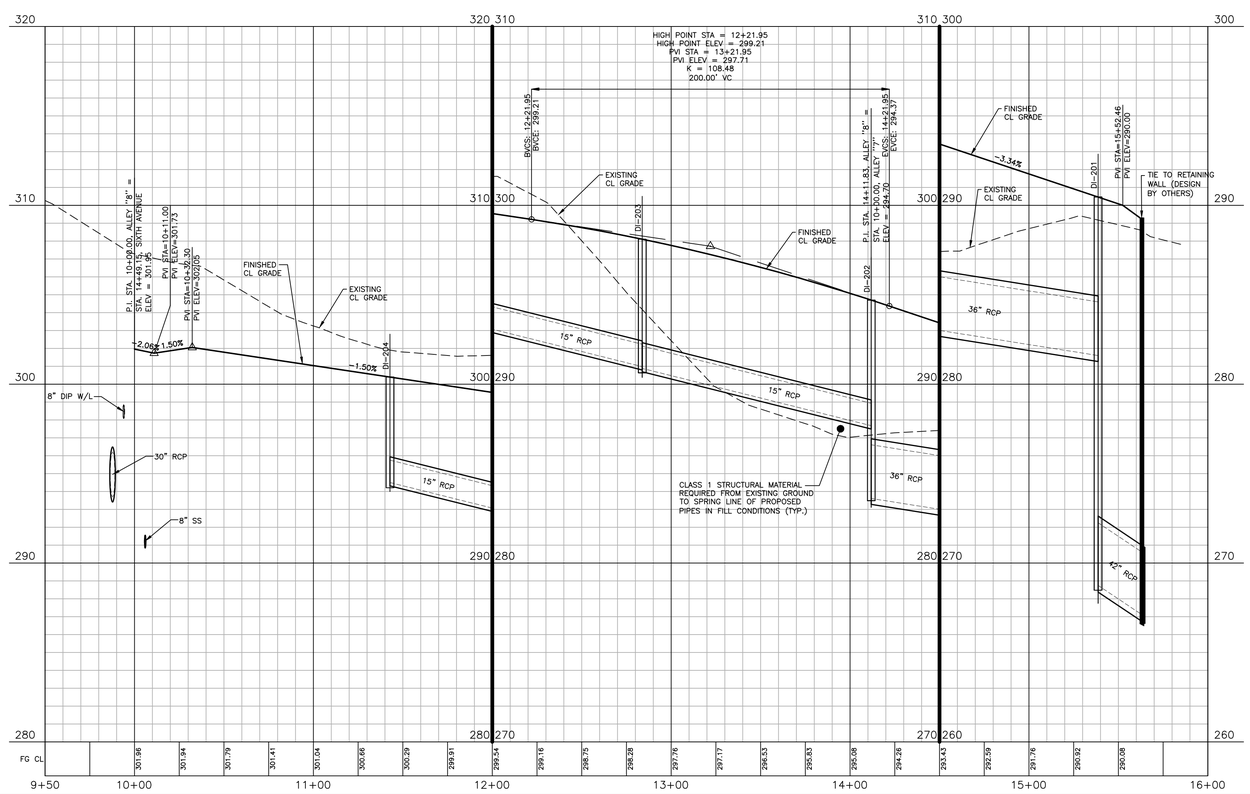

CITY OF RALEIGH – PLANS AUTHORIZED FOR CONSTRUCTION

Plans for the proposed use have been reviewed for general compliance with applicable codes. This limited review, and authorization for construction is not to be considered to represent total compliance with all legal requirements for development and construction. The property owner, design consultants, and contractors are each responsible for compliance with all applicable City, State and Federal laws. This specific authorization below is not a permit, nor shall it be construed to permit any violation of City, State or Federal Law. All Construction must be in accordance with all Local, State, and Federal Rules and Regulations.

Electronic Approval: This approval is being issued electronically. This approval is valid only upon the signature of a City of Raleigh Review Officer below. The City will retain a copy of the approved plans. Any work authorized by this approval must proceed in accordance with the plans kept on file with the City. This electronic approval may not be edited once issued. Any modification to this approval once issued will invalidate this approval.

City of Raleigh Development Approval _____
City of Raleigh Review Officer

SITE PERMITTING APPROVAL

Water and Sewer Permits (If applicable)

The City of Raleigh consents to the connection and extension of the City's Public Sewer System as shown on this plan. The material and Construction methods used for this project shall conform to the standards and specifications of the City's Public Utilities Handbook. City of Raleigh Public Utilities Department Permit # S-5378

The City of Raleigh consents to the connection and extension of the City's Public Water System as shown on this plan. The material and Construction methods used for this project shall conform to the standards and specifications of the City's Public Utilities Handbook. City of Raleigh Public Utilities Department Permit # W-4073

The City of Raleigh consents to the connection to its public sewer system and extension of the private sewer collection system as shown on this plan. The material and constructions methods used for this project shall conform to the standards and specifications of the City's Public Utilities Handbook.
City of Raleigh Public Utilities Department Permit # _____

SEE SHEET C0.01 FOR ALL PROJECT, SITE, GRADING, STORM DRAINAGE AND UTILITY NOTES

ALL CONSTRUCTION SHALL BE IN ACCORDANCE WITH THE CURRENT TOWN OF KNIGHTDALE, CITY OF RALEIGH PUBLIC UTILITIES, AND NCDOT (WHERE APPLICABLE) ENGINEERING DESIGN AND CONSTRUCTION STANDARDS

Town Certification. This design has been reviewed by the Engineer for the Town of Knightdale, and to the best of my knowledge and belief, it conforms to the requirements established in the Standard Specifications of the Town of Knightdale.
By: _____ Date: _____
Town Engineer
These plans are approved by the Town of Knightdale and serve as construction plans for this project.
By: _____ Date: _____
Administrator

FINAL DRAWING - RELEASED FOR CONSTRUCTION

McADAMS

The John R. McAdams Company, Inc.
2905 Meridian Parkway
Durham, NC 27713

phone 919. 361. 5000
fax 919. 361. 2269
license number: C-0293, C-187

www.mcadamsco.com

CLIENT
ALLIANCE GROUP OF NC, LLC
7208 FALLS OF NEUSE RD, SUITE 101
RALEIGH, NORTH CAROLINA 27615
JACOB ANDERSON
PHONE: 919. 239. 9486

AGNC

REVISIONS

NO.	DATE	
1	----	----
2	----	----
3	----	----
4	----	----
5	----	----
6	----	----

NORTH CAROLINA PROFESSIONAL SEAL 051536 ENGINEER TYLER E. PROBST

DOWNTOWN NORTH AT KNIGHTDALE STATION
CONSTRUCTION DRAWINGS - PHASE 1
N SMITHFIELD ROAD
KNIGHTDALE, NORTH CAROLINA

PLAN INFORMATION

PROJECT NO.	AGN-21002
FILENAME	AGN21002-P2
CHECKED BY	JCM / TEP
DRAWN BY	MRC / LRS / RAD
SCALE	1" = 40'/1" = 4'
DATE	02. 16. 2024

PLAN AND PROFILE
ALLEY "8"
STA. 9+50 THRU STA. 16+00

C5.13

M:\Projects\AGN\AGN21002\04-Production\Engineering\Current Drawings\Construction Drawings Sets\Phase-1\AGN21002-P2.dwg, 2/16/2024 2:09:24 PM, John Martin

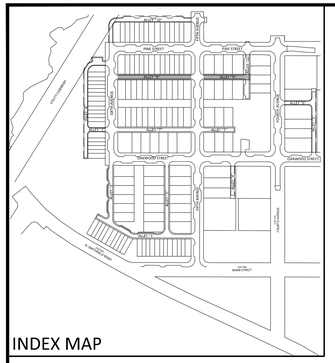

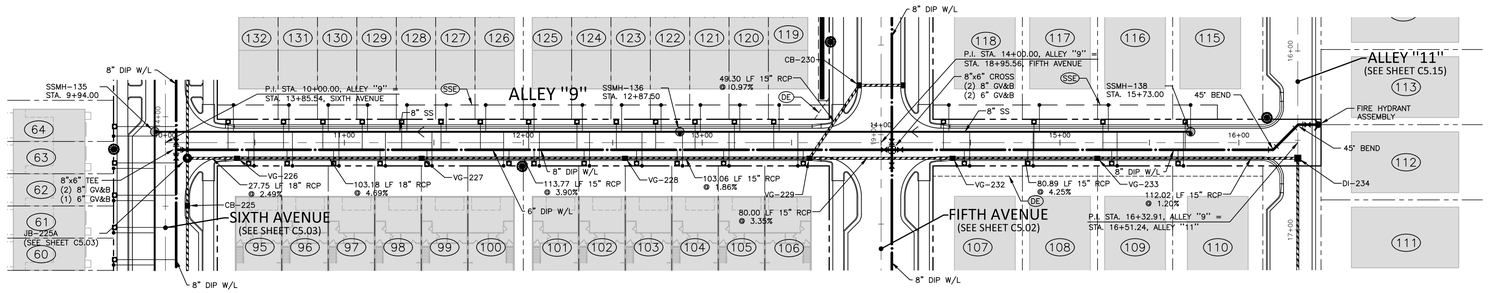

STORM DRAINAGE STRUCTURE TABLE:

DI-234 (NCDOT 840.16)
STA 16+59.99
T/G=326.03
INV IN=314.51 (DI-235)
INV OUT=314.41

VG-226 (VALLEY GRATE)
STA 10+40.00
T/C=300.81
INV IN=294.50 (VG-227)
INV OUT=294.22

VG-227 (VALLEY GRATE)
STA 11+43.18
T/C=306.42
INV IN=299.80 (VG-228)
INV OUT=299.34

VG-228 (VALLEY GRATE)
STA 12+56.94
T/C=311.82
INV IN=304.54 (VG-229)
INV OUT=304.24

VG-229 (VALLEY GRATE)
STA 13+60.00
T/C=315.07
INV IN=306.75 (VG-232)
INV IN=308.18 (CB-230)
INV OUT=306.46

VG-232 (VALLEY GRATE)
STA 14+40.00
T/C=316.50
INV IN=309.53 (VG-233)
INV OUT=309.43

VG-233 (VALLEY GRATE)
STA 15+20.89
T/C=321.01
INV IN=313.07 (DI-234)
INV OUT=312.97

EASEMENT LEGEND

- DE — STORM DRAINAGE EASEMENT
- UE — CITY OF RALEIGH WATERLINE EASEMENT
- SSE — CITY OF RALEIGH SANITARY SEWER EASEMENT
- AE — PUBLIC ACCESS EASEMENT

GRAPHIC SCALE
0 20 40 80
1 inch = 40 ft.

ALLEY "9"

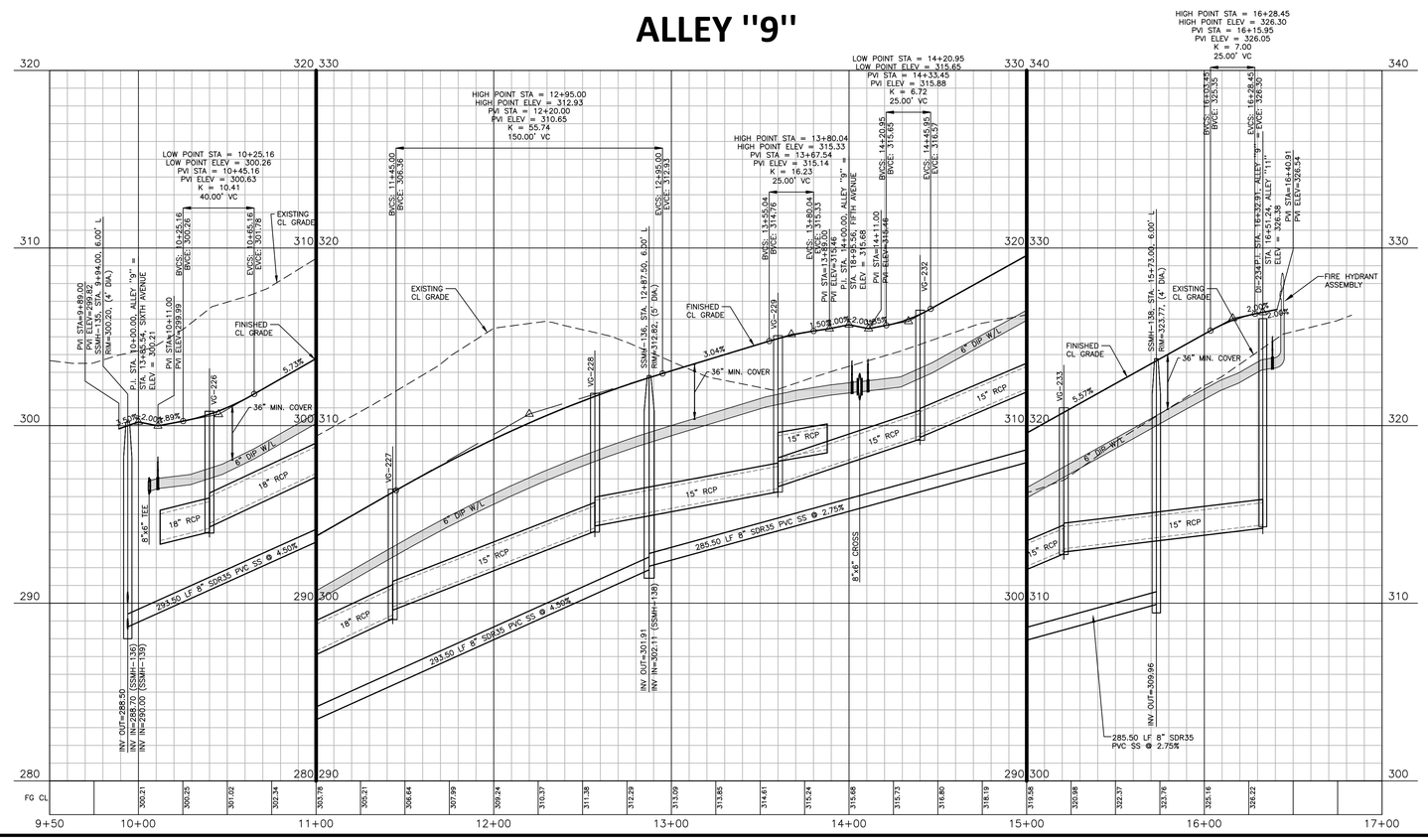

CITY OF RALEIGH – PLANS AUTHORIZED FOR CONSTRUCTION

Plans for the proposed use have been reviewed for general compliance with applicable codes. This limited review, and authorization for construction is not to be considered to represent total compliance with all legal requirements for development and construction. The property owner, design consultants, and contractors are each responsible for compliance with all applicable City, State and Federal laws. This specific authorization below is not a permit, nor shall it be construed to permit any violation of City, State or Federal Law. All Construction must be in accordance with all Local, State, and Federal Rules and Regulations.

Electronic Approval: This approval is being issued electronically. This approval is valid only upon the signature of a City of Raleigh Review Officer below. The City will retain a copy of the approved plans. Any work authorized by this approval must proceed in accordance with the plans kept on file with the City. This electronic approval may not be edited once issued. Any modification to this approval once issued will invalidate this approval.

City of Raleigh Development Approval _____
City of Raleigh Review Officer

SITE PERMITTING APPROVAL

Water and Sewer Permits (if applicable)

The City of Raleigh consents to the connection and extension of the City's Public Sewer System as shown on this plan. The material and Construction methods used for this project shall conform to the standards and specifications of the City's Public Utilities Handbook. City of Raleigh Public Utilities Department Permit # S-5378

The City of Raleigh consents to the connection and extension of the City's Public Water System as shown on this plan. The material and Construction methods used for this project shall conform to the standards and specifications of the City's Public Utilities Handbook. City of Raleigh Public Utilities Department Permit # W-4073

The City of Raleigh consents to the connection to its public sewer system and extension of the private sewer collection system as shown on this plan. The material and constructions methods used for this project shall conform to the standards and specifications of the City's Public Utilities Handbook.
City of Raleigh Public Utilities Department Permit # _____

SEE SHEET C0.01 FOR ALL PROJECT, SITE, GRADING, STORM DRAINAGE AND UTILITY NOTES

ALL CONSTRUCTION SHALL BE IN ACCORDANCE WITH THE CURRENT TOWN OF KNIGHTDALE, CITY OF RALEIGH PUBLIC UTILITIES, AND NCDOT (WHERE APPLICABLE) ENGINEERING DESIGN AND CONSTRUCTION STANDARDS

Town Certification. This design has been reviewed by the Engineer for the Town of Knightdale, and to the best of my knowledge and belief, it conforms to the requirements established in the Standard Specifications of the Town of Knightdale.
By: _____ Date: _____
Town Engineer
These plans are approved by the Town of Knightdale and serve as construction plans for this project.
By: _____ Date: _____
Administrator

FINAL DRAWING - RELEASED FOR CONSTRUCTION

McADAMS

The John R. McAdams Company, Inc.
2905 Meridian Parkway
Durham, NC 27713

phone 919. 361. 5000
fax 919. 361. 2269
license number: C-0293, C-187

www.mcadamsco.com

CLIENT
ALLIANCE GROUP OF NC, LLC
7208 FALLS OF NEUSE RD, SUITE 101
RALEIGH, NORTH CAROLINA 27615
JACOB ANDERSON
PHONE: 919. 239. 9486

AGNC BROKERAGE | CONSULTING | PLANNING

REVISIONS

NO.	DATE	
1	----	----
2	----	----
3	----	----
4	----	----
5	----	----
6	----	----

NORTH CAROLINA PROFESSIONAL SEAL 051536 ENGINEER TYLER E. PROBST

DOWNTOWN NORTH AT KNIGHTDALE STATION

CONSTRUCTION DRAWINGS - PHASE 1

N SMITHFIELD ROAD

KNIGHTDALE, NORTH CAROLINA

PLAN INFORMATION

PROJECT NO.	AGN-21002
FILENAME	AGN21002-P2
CHECKED BY	JCM / TEP
DRAWN BY	MRC / LRS / RAD
SCALE	1" = 40'/1" = 4'
DATE	02. 16. 2024

PLAN AND PROFILE
ALLEY "9"
STA. 9+50 THRU STA. 17+00

C5.14

M:\Projects\AGN\AGN21002\04-Production\Engineering\Current Drawings\Construction Drawings Sets\Phase-1\AGN21002-P2.dwg, 7/19/2024 2:52:35 PM, Megan Clifford

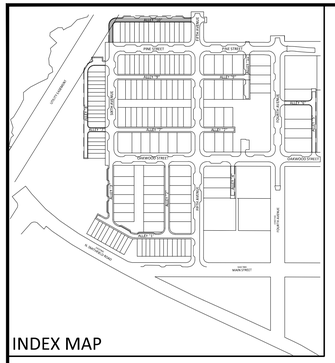

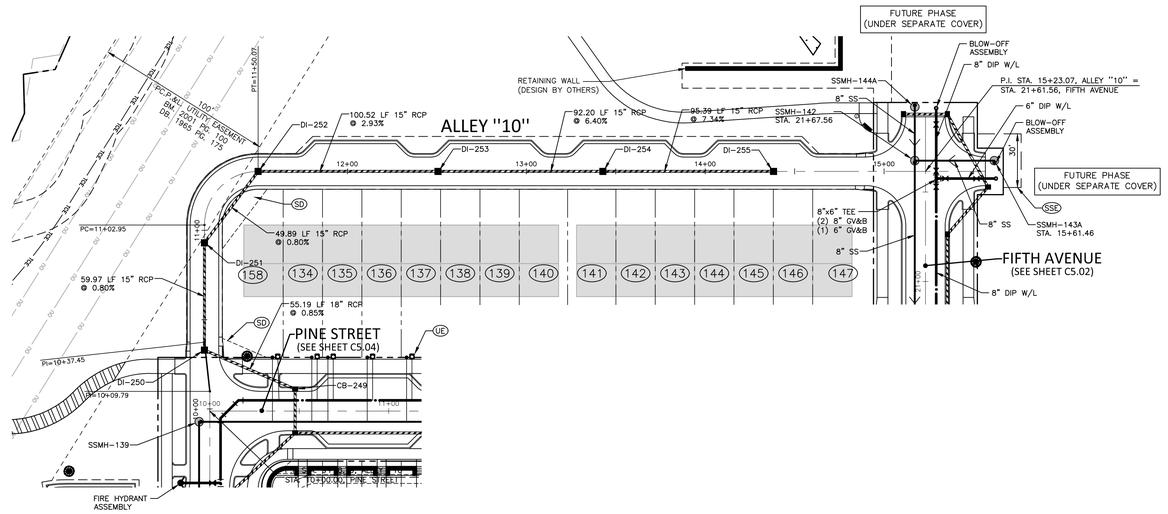

STORM DRAINAGE STRUCTURE TABLE:

DI-250 (NCDOT 840.16) STA 10+33.05 T/G=303.71 INV IN=297.87 (DI-251) INV OUT=297.77	DI-253 (NCDOT 840.16) STA 12+50.57 T/G=307.68 INV IN=302.00 (DI-254) INV OUT=301.90
DI-251 (NCDOT 840.16) STA 10+93.00 T/G=302.97 INV IN=298.45 (DI-252) INV OUT=298.35	DI-254 (NCDOT 840.16) STA 13+42.77 T/G=314.28 INV IN=308.00 (DI-255) INV OUT=307.90
DI-252 (NCDOT 840.16) STA 11+50.05 T/G=303.56 INV IN=298.95 (DI-253) INV OUT=298.85	DI-255 (NCDOT 840.16) STA 14+38.16 T/G=321.33 INV OUT=315.00

EASEMENT LEGEND

- (DE) STORM DRAINAGE EASEMENT
- (UE) CITY OF RALEIGH WATERLINE EASEMENT
- (SSE) CITY OF RALEIGH SANITARY SEWER EASEMENT
- (AE) PUBLIC ACCESS EASEMENT

GRAPHIC SCALE
0 20 40 80
1 inch = 40 ft.

ALLEY "10"

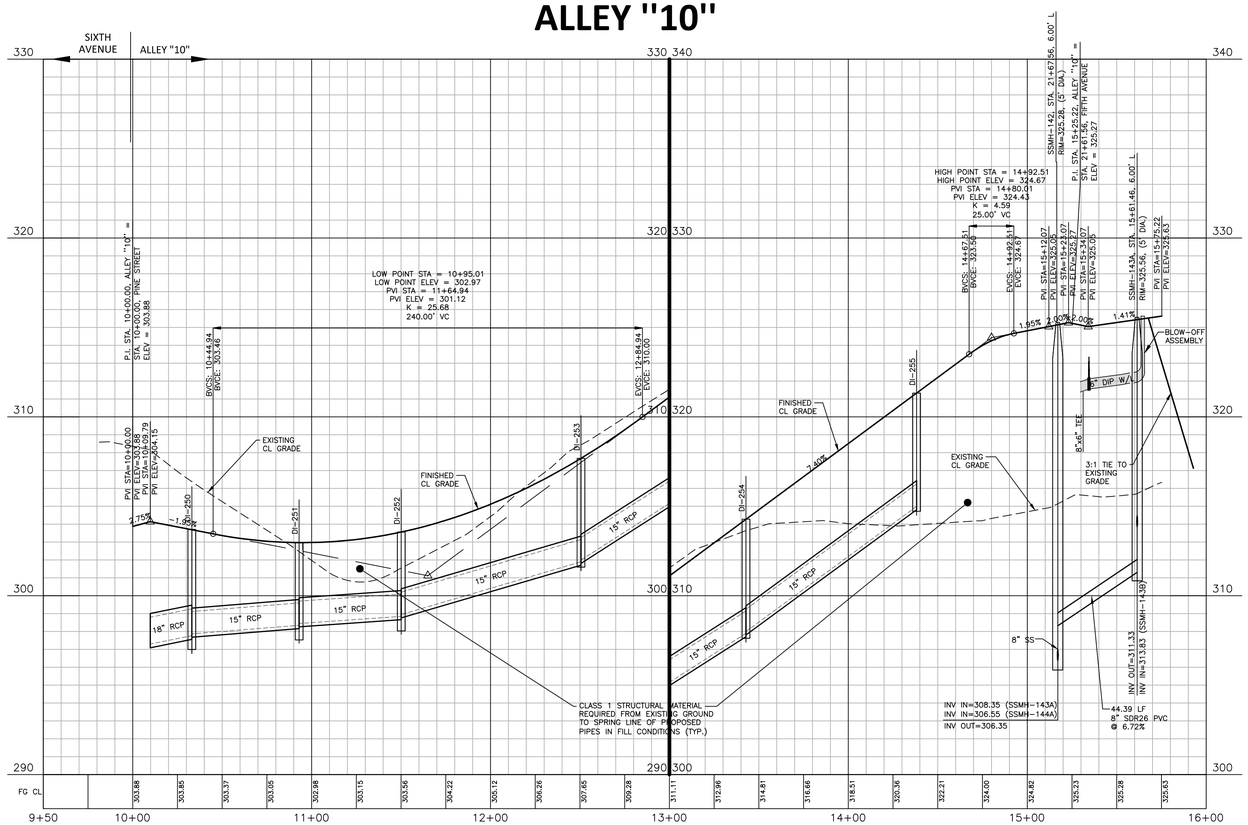

CITY OF RALEIGH – PLANS AUTHORIZED FOR CONSTRUCTION

Plans for the proposed use have been reviewed for general compliance with applicable codes. This limited review, and authorization for construction is not to be considered to represent total compliance with all legal requirements for development and construction. The property owner, design consultants, and contractors are each responsible for compliance with all applicable City, State and Federal laws. This specific authorization below is not a permit, nor shall it be construed to permit any violation of City, State or Federal Law. All Construction must be in accordance with all Local, State, and Federal Rules and Regulations.

Electronic Approval: This approval is being issued electronically. This approval is valid only upon the signature of a City of Raleigh Review Officer below. The City will retain a copy of the approved plans. Any work authorized by this approval must proceed in accordance with the plans kept on file with the City. This electronic approval may not be edited once issued. Any modification to this approval once issued will invalidate this approval.

City of Raleigh Development Approval _____

City of Raleigh Review Officer

SITE PERMITTING APPROVAL

Water and Sewer Permits (If applicable)

The City of Raleigh consents to the connection and extension of the City's Public Sewer System as shown on this plan. The material and Construction methods used for this project shall conform to the standards and specifications of the City's Public Utilities Handbook. City of Raleigh Public Utilities Department Permit # S-5378

The City of Raleigh consents to the connection and extension of the City's Public Water System as shown on this plan. The material and Construction methods used for this project shall conform to the standards and specifications of the City's Public Utilities Handbook. City of Raleigh Public Utilities Department Permit # W-4073

The City of Raleigh consents to the connection to its public sewer system and extension of the private sewer collection system as shown on this plan. The material and constructions methods used for this project shall conform to the standards and specifications of the City's Public Utilities Handbook.
City of Raleigh Public Utilities Department Permit # _____

SEE SHEET C0.01 FOR ALL PROJECT, SITE, GRADING, STORM DRAINAGE AND UTILITY NOTES

ALL CONSTRUCTION SHALL BE IN ACCORDANCE WITH THE CURRENT TOWN OF KNIGHTDALE, CITY OF RALEIGH PUBLIC UTILITIES, AND NCDOT (WHERE APPLICABLE) ENGINEERING DESIGN AND CONSTRUCTION STANDARDS

Town Certification. This design has been reviewed by the Engineer for the Town of Knightdale, and to the best of my knowledge and belief, it conforms to the requirements established in the Standard Specifications of the Town of Knightdale.
By: _____ Date: _____
Town Engineer
These plans are approved by the Town of Knightdale and serve as construction plans for this project.
By: _____ Date: _____
Administrator

FINAL DRAWING - RELEASED FOR CONSTRUCTION

The John R. McAdams Company, Inc.
2905 Meridian Parkway
Durham, NC 27713

phone 919. 361. 5000
fax 919. 361. 2269
license number: C-0293, C-187

www.mcadamsco.com

CLIENT

ALLIANCE GROUP OF NC, LLC
7208 FALLS OF NEUSE RD, SUITE 101
RALEIGH, NORTH CAROLINA 27615
JACOB ANDERSON
PHONE: 919. 239. 9486

REVISIONS

NO.	DATE	
1	----	----
2	----	----
3	----	----
4	----	----
5	----	----
6	----	----

NORTH CAROLINA PROFESSIONAL SEAL 051536 ENGINEER TYLER E. PROST

DOWNTOWN NORTH AT KNIGHTDALE STATION

CONSTRUCTION DRAWINGS - PHASE 1

N SMITHFIELD ROAD

KNIGHTDALE, NORTH CAROLINA

PLAN INFORMATION

PROJECT NO.	AGN-21002
FILENAME	AGN21002-P2
CHECKED BY	JCM / TEP
DRAWN BY	MRC / LRS / RAD
SCALE	1" = 40'/1" = 4'
DATE	02. 16. 2024

PLAN AND PROFILE

ALLEY "10"

STA. 9+50 THRU STA. 16+00

C5.15

M:\Projects\AGN\AGN21002\04-Production\Engineering\Current Drawing\Construction Drawings Sets\Phase-1\AGN21002-P2.dwg, 2/13/2024 2:55:20 PM, Megan Clifford

STORM DRAINAGE STRUCTURE TABLE:

DI-234 (NCDOT 840.16) STA 16+59.99 T/G=326.03 INV IN=314.51 (DI-235) INV OUT=314.41
DI-235 (NCDOT 840.16) STA 17+45.88 T/G=320.41 INV IN=316.85 (YI-297) INV OUT=315.20

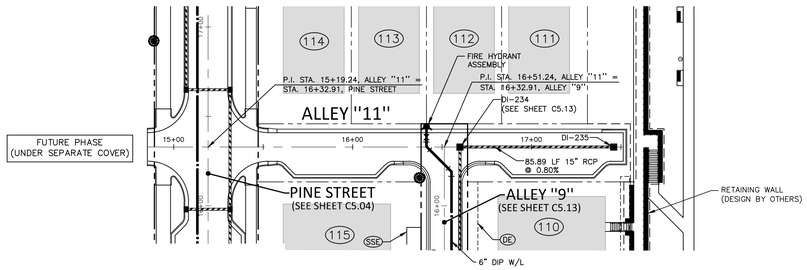

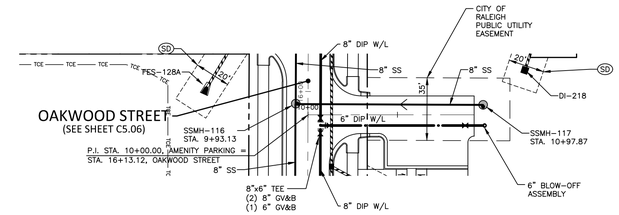

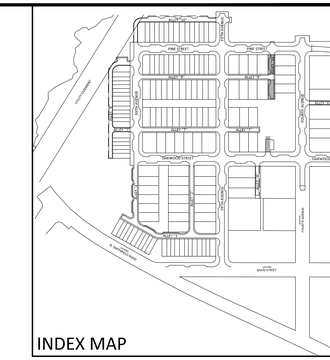

GRAPHIC SCALE
0 20 40 80
1 inch = 40 ft.

EASEMENT LEGEND

- DE — STORM DRAINAGE EASEMENT
- UE — CITY OF RALEIGH WATERLINE EASEMENT
- SSE — CITY OF RALEIGH SANITARY SEWER EASEMENT
- AE — PUBLIC ACCESS EASEMENT

GRAPHIC SCALE
0 20 40 80
1 inch = 40 ft.

ALLEY "11"

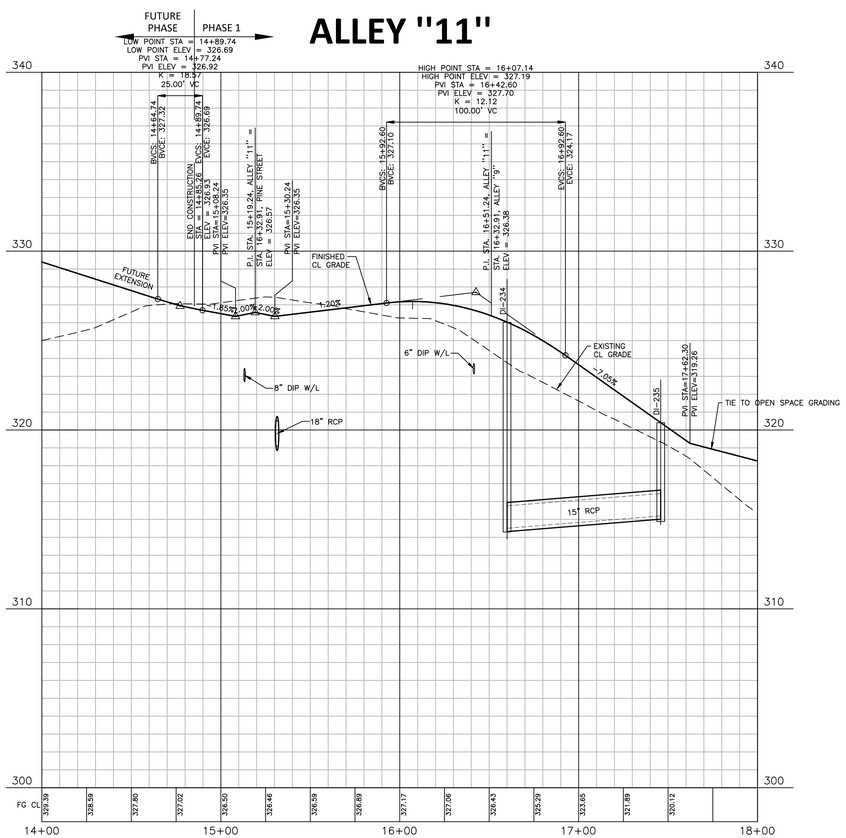

AMENITY PARKING

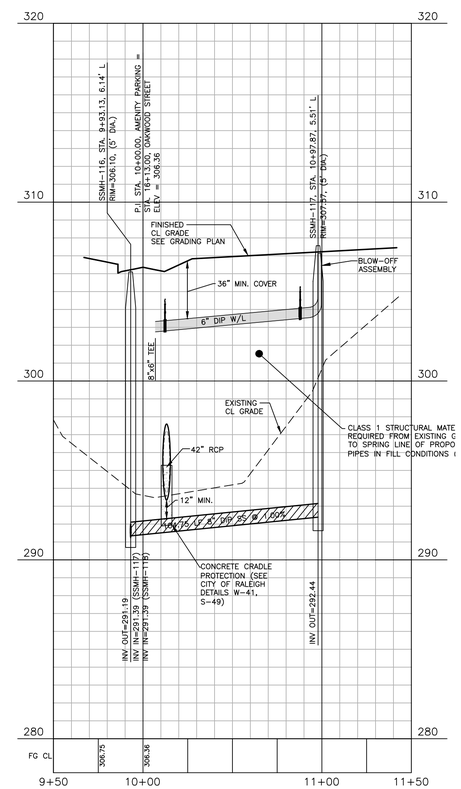

CITY OF RALEIGH – PLANS AUTHORIZED FOR CONSTRUCTION

Plans for the proposed use have been reviewed for general compliance with applicable codes. This limited review, and authorization for construction is not to be considered to represent total compliance with all legal requirements for development and construction. The property owner, design consultants, and contractors are each responsible for compliance with all applicable City, State and Federal laws. This specific authorization below is not a permit, nor shall it be construed to permit any violation of City, State or Federal Law. All Construction must be in accordance with all Local, State, and Federal Rules and Regulations.

Electronic Approval: This approval is being issued electronically. This approval is valid only upon the signature of a City of Raleigh Review Officer below. The City will retain a copy of the approved plans. Any work authorized by this approval must proceed in accordance with the plans kept on file with the City. This electronic approval may not be edited once issued. Any modification to this approval once issued will invalidate this approval.

City of Raleigh Development Approval _____
City of Raleigh Review Officer

SITE PERMITTING APPROVAL

Water and Sewer Permits (If applicable)

The City of Raleigh consents to the connection and extension of the City's Public Sewer System as shown on this plan. The material and Construction methods used for this project shall conform to the standards and specifications of the City's Public Utilities Handbook. City of Raleigh Public Utilities Department Permit # S-5378

The City of Raleigh consents to the connection and extension of the City's Public Water System as shown on this plan. The material and Construction methods used for this project shall conform to the standards and specifications of the City's Public Utilities Handbook. City of Raleigh Public Utilities Department Permit # W-4073

The City of Raleigh consents to the connection to its public sewer system and extension of the private sewer collection system as shown on this plan. The material and constructions methods used for this project shall conform to the standards and specifications of the City's Public Utilities Handbook.
City of Raleigh Public Utilities Department Permit # _____

SEE SHEET C0.01 FOR ALL PROJECT, SITE, GRADING, STORM DRAINAGE AND UTILITY NOTES

ALL CONSTRUCTION SHALL BE IN ACCORDANCE WITH THE CURRENT TOWN OF KNIGHTDALE, CITY OF RALEIGH PUBLIC UTILITIES, AND NCDOT (WHERE APPLICABLE) ENGINEERING DESIGN AND CONSTRUCTION STANDARDS

Town Certification. This design has been reviewed by the Engineer for the Town of Knightdale, and to the best of my knowledge and belief, it conforms to the requirements established in the Standard Specifications of the Town of Knightdale.
By: _____ Date: _____
Town Engineer
These plans are approved by the Town of Knightdale and serve as construction plans for this project.
By: _____ Date: _____
Administrator

FINAL DRAWING - RELEASED FOR CONSTRUCTION

M:\Projects\AGN\AGN21002\04-Production\Engineering\Current Drawings\Construction Drawings Sets\Phase-1\AGN21002-P2.dwg, 2/19/2024 6:04:03 PM, Tyler Probst

The John R. McAdams Company, Inc.
2905 Meridian Parkway
Durham, NC 27713

phone 919. 361. 5000
fax 919. 361. 2269
license number: C-0293, C-187

www.mcadamsco.com

CLIENT

ALLIANCE GROUP OF NC, LLC
7208 FALLS OF NEUSE RD, SUITE 101
RALEIGH, NORTH CAROLINA 27615
JACOB ANDERSON
PHONE: 919. 239. 9486

REVISIONS

NO.	DATE	
1	----	----
2	----	----
3	----	----
4	----	----
5	----	----
6	----	----

NORTH CAROLINA PROFESSIONAL SEAL 051536 ENGINEER TYLER E. PROBST

DOWNTOWN NORTH AT KNIGHTDALE STATION

CONSTRUCTION DRAWINGS - PHASE 1

N SMITHFIELD ROAD

KNIGHTDALE, NORTH CAROLINA

PLAN INFORMATION

PROJECT NO.	AGN-21002
FILENAME	AGN21002-P2
CHECKED BY	JCM / TEP
DRAWN BY	MRC / LRS / RAD
SCALE	1" = 40'/1" = 4'
DATE	02. 16. 2024

PLAN AND PROFILE

ALLEY "11", STA. 14+00 THRU STA. 18+00
AMENITY PARKING, STA. 9+50 THRU STA. 11+50

C5.16

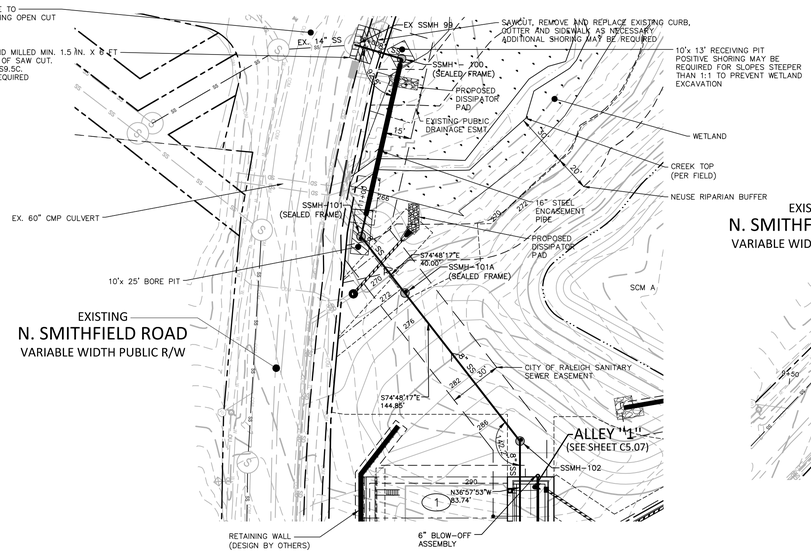

STORM DRAINAGE STRUCTURE TABLE:

DH JB-102
RIM=272.41
INV IN=268.46 (EX CURB INLET-101)
INV OUT=266.28

FLARED END SECTION
INV=266.00

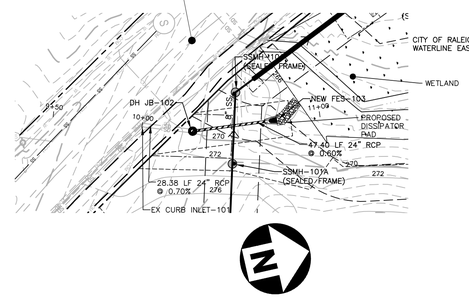

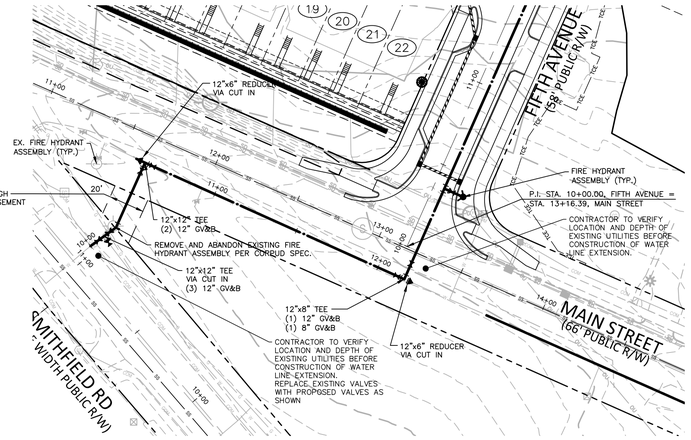

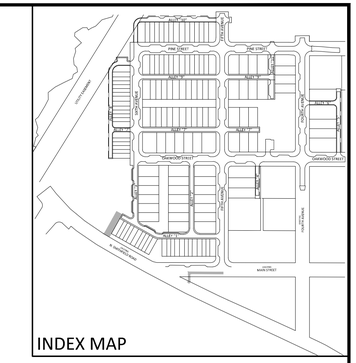

GRAPHIC SCALE
0 20 40 80
1 inch = 40 ft.

EASEMENT LEGEND

DE STORM DRAINAGE EASEMENT
SSE CITY OF RALEIGH SANITARY SEWER EASEMENT

LEGEND

SCM STORMWATER CONTROL MEASURE

SS OUTFALL "100"

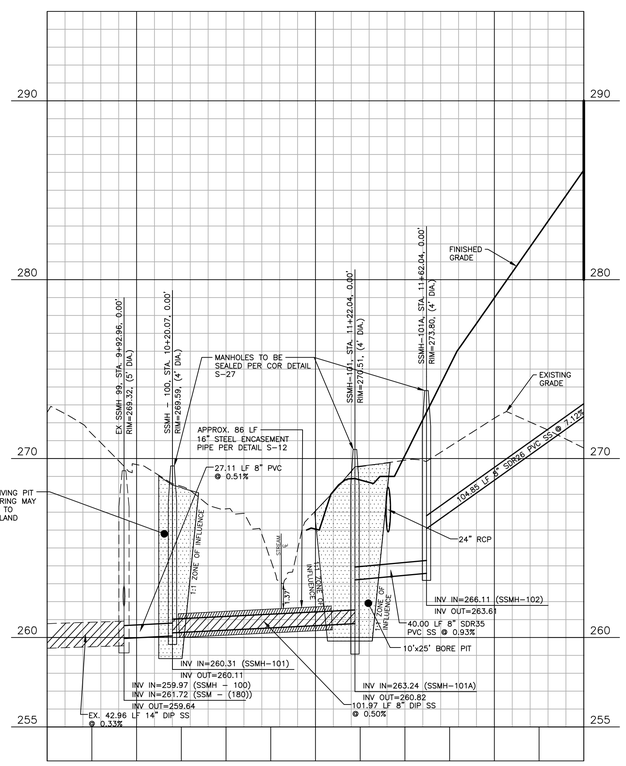

STORM EXT. N SMITHFIELD RD

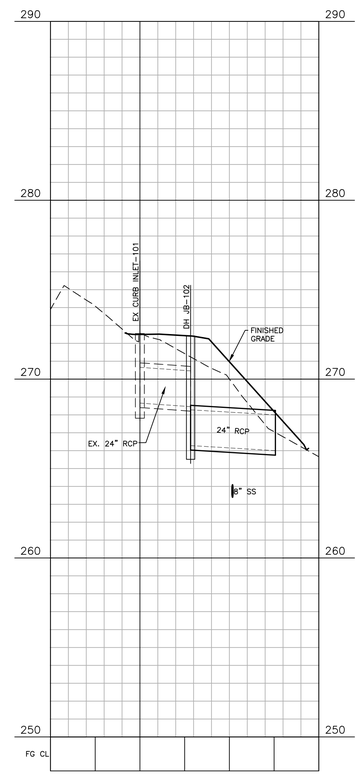

N SMITHFIELD RD WATER TIE IN

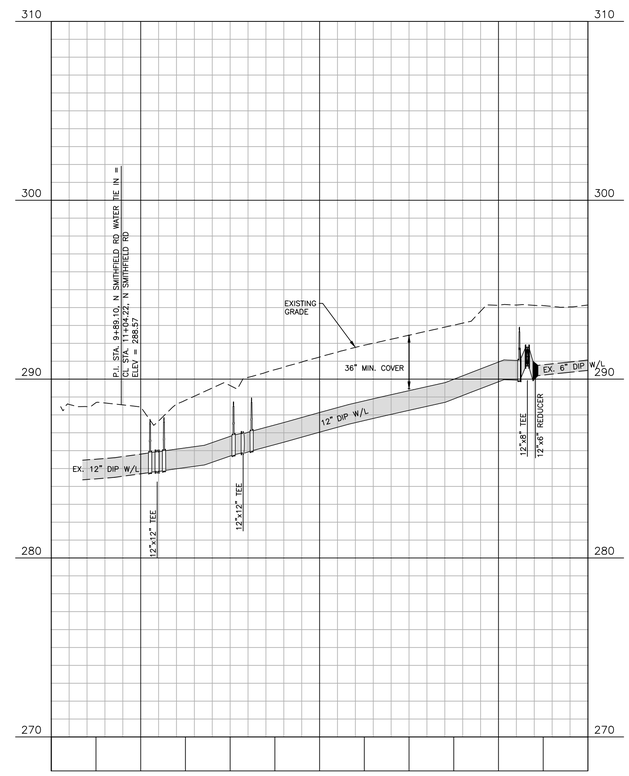

CITY OF RALEIGH – PLANS AUTHORIZED FOR CONSTRUCTION

Plans for the proposed use have been reviewed for general compliance with applicable codes. This limited review, and authorization for construction is not to be considered to represent total compliance with all legal requirements for development and construction. The property owner, design consultants, and contractors are each responsible for compliance with all applicable City, State and Federal laws. This specific authorization below is not a permit, nor shall it be construed to permit any violation of City, State or Federal Law. All Construction must be in accordance with all Local, State, and Federal Rules and Regulations.

Electronic Approval: This approval is being issued electronically. This approval is valid only upon the signature of a City of Raleigh Review Officer below. The City will retain a copy of the approved plans. Any work authorized by this approval must proceed in accordance with the plans kept on file with the City. This electronic approval may not be edited once issued. Any modification to this approval once issued will invalidate this approval.

City of Raleigh Development Approval _____
City of Raleigh Review Officer

SITE PERMITTING APPROVAL

Water and Sewer Permits (If applicable)

The City of Raleigh consents to the connection and extension of the City's Public Sewer System as shown on this plan. The material and Construction methods used for this project shall conform to the standards and specifications of the City's Public Utilities Handbook. City of Raleigh Public Utilities Department Permit # S-5378

The City of Raleigh consents to the connection and extension of the City's Public Water System as shown on this plan. The material and Construction methods used for this project shall conform to the standards and specifications of the City's Public Utilities Handbook. City of Raleigh Public Utilities Department Permit # W-4073

The City of Raleigh consents to the connection to its public sewer system and extension of the private sewer collection system as shown on this plan. The material and constructions methods used for this project shall conform to the standards and specifications of the City's Public Utilities Handbook.
City of Raleigh Public Utilities Department Permit # _____

SEE SHEET C0.01 FOR ALL PROJECT, SITE, GRADING, STORM DRAINAGE AND UTILITY NOTES

ALL CONSTRUCTION SHALL BE IN ACCORDANCE WITH THE CURRENT TOWN OF KNIGHTDALE, CITY OF RALEIGH PUBLIC UTILITIES, AND NCDOT (WHERE APPLICABLE) ENGINEERING DESIGN AND CONSTRUCTION STANDARDS

Town Certification. This design has been reviewed by the Engineer for the Town of Knightdale, and to the best of my knowledge and belief, it conforms to the requirements established in the Standard Specifications of the Town of Knightdale.
By: _____ Date: _____
Town Engineer
These plans are approved by the Town of Knightdale and serve as construction plans for this project.
By: _____ Date: _____
Administrator

FINAL DRAWING - RELEASED FOR CONSTRUCTION

M:\Projects\AGN\AGN21002\04-Production\Engineering\Current Drawings\Construction Drawings Sets\Phase-1\AGN21002-P3.dwg, 2/19/2024 6:13:06 PM, Tyler Probst

MCADAMS

The John R. McAdams Company, Inc.
2905 Meridian Parkway
Durham, NC 27713

phone 919. 361. 5000
fax 919. 361. 2269
license number: C-0293, C-187

www.mcadamsco.com

CLIENT

ALLIANCE GROUP OF NC, LLC
7208 FALLS OF NEUSE RD, SUITE 101
RALEIGH, NORTH CAROLINA 27615
JACOB ANDERSON
PHONE: 919. 239. 9486

AGNC BROKERAGE | CONSULTING | PLANNING

REVISIONS

NO.	DATE	
1	----	----
2	----	----
3	----	----
4	----	----
5	----	----
6	----	----

NORTH CAROLINA PROFESSIONAL SEAL 051536 ENGINEER TYLER E. PROBST

DOWNTOWN NORTH AT KNIGHTDALE STATION

CONSTRUCTION DRAWINGS - PHASE 1

N SMITHFIELD ROAD

KNIGHTDALE, NORTH CAROLINA

PLAN INFORMATION

PROJECT NO.	AGN-21002
FILENAME	AGN21002-P3
CHECKED BY	JCM / TEP
DRAWN BY	MRC / LRS / RAD
SCALE	1" = 40'/1" = 4'
DATE	02. 16. 2024

PLAN AND PROFILE

SS OUTFALL "100" - STA. 9+50 THRU STA. 12+00
STORM EXT. N SMITHFIELD RD
STA. 9+50 THRU STA. 11+00
N SMITHFIELD RD WATER TIE IN
STA. 9+50 THRU STA. 12+50

C5.17

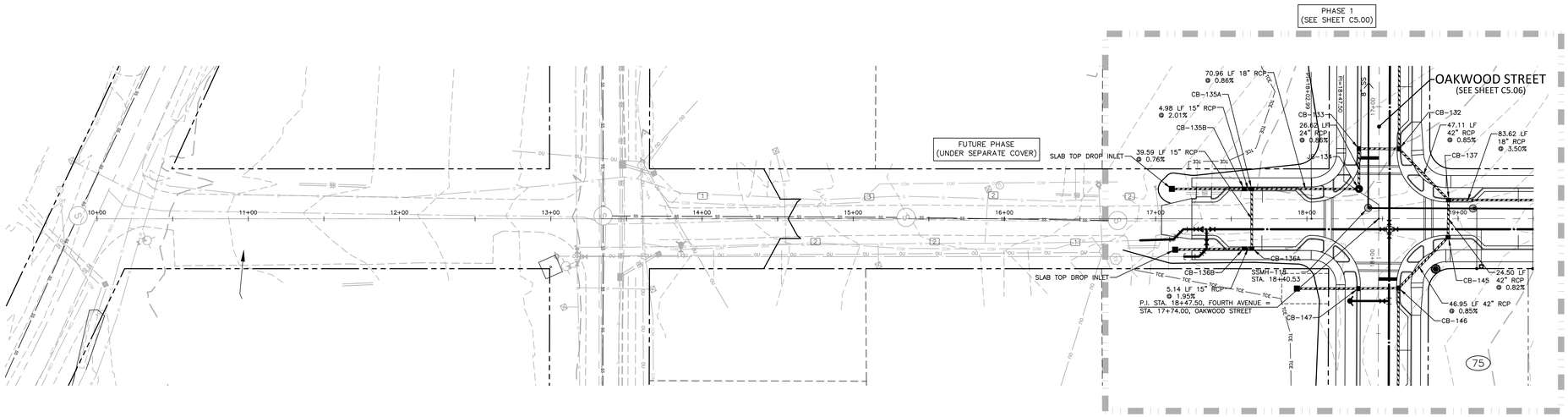

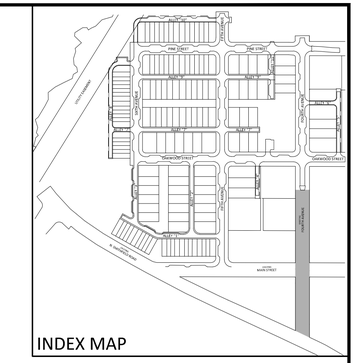

GRAPHIC SCALE
0 20 40 80
1 inch = 40 ft.

FOURTH AVENUE

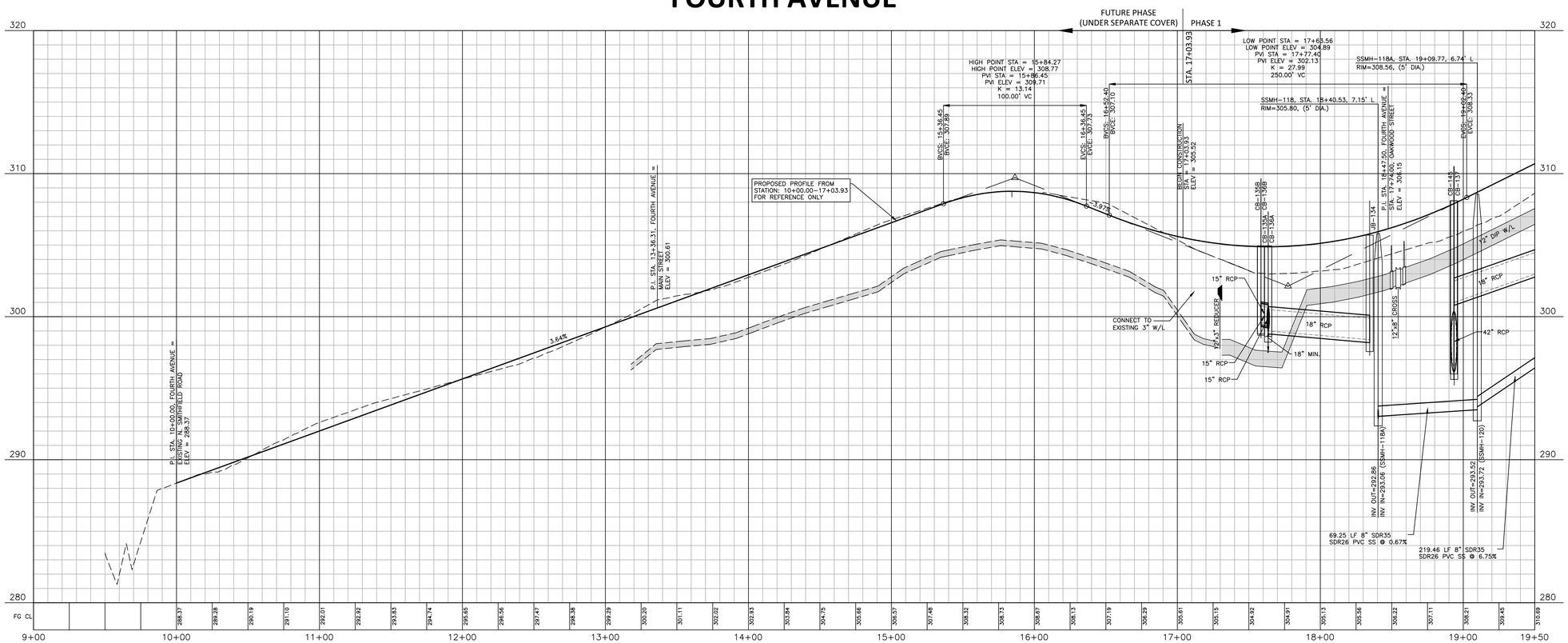

CITY OF RALEIGH – PLANS AUTHORIZED FOR CONSTRUCTION

Plans for the proposed use have been reviewed for general compliance with applicable codes. This limited review, and authorization for construction is not to be considered to represent total compliance with all legal requirements for development and construction. The property owner, design consultants, and contractors are each responsible for compliance with all applicable City, State and Federal laws. This specific authorization below is not a permit, nor shall it be construed to permit any violation of City, State or Federal Law. All Construction must be in accordance with all Local, State, and Federal Rules and Regulations.

Electronic Approval: This approval is being issued electronically. This approval is valid only upon the signature of a City of Raleigh Review Officer below. The City will retain a copy of the approved plans. Any work authorized by this approval must proceed in accordance with the plans kept on file with the City. This electronic approval may not be edited once issued. Any modification to this approval once issued will invalidate this approval.

City of Raleigh Development Approval _____
City of Raleigh Review Officer

SITE PERMITTING APPROVAL

Water and Sewer Permits (If applicable)

The City of Raleigh consents to the connection and extension of the City's Public Sewer System as shown on this plan. The material and Construction methods used for this project shall conform to the standards and specifications of the City's Public Utilities Handbook. City of Raleigh Public Utilities Department Permit # S-5378

The City of Raleigh consents to the connection and extension of the City's Public Water System as shown on this plan. The material and Construction methods used for this project shall conform to the standards and specifications of the City's Public Utilities Handbook. City of Raleigh Public Utilities Department Permit # W-4073

The City of Raleigh consents to the connection to its public sewer system and extension of the private sewer collection system as shown on this plan. The material and constructions methods used for this project shall conform to the standards and specifications of the City's Public Utilities Handbook.
City of Raleigh Public Utilities Department Permit # _____

SEE SHEET C0.01 FOR ALL PROJECT, SITE, GRADING, STORM DRAINAGE AND UTILITY NOTES

ALL CONSTRUCTION SHALL BE IN ACCORDANCE WITH THE CURRENT TOWN OF KNIGHTDALE, CITY OF RALEIGH PUBLIC UTILITIES, AND NCDOT (WHERE APPLICABLE) ENGINEERING DESIGN AND CONSTRUCTION STANDARDS

Town Certification. This design has been reviewed by the Engineer for the Town of Knightdale, and to the best of my knowledge and belief, it conforms to the requirements established in the Standard Specifications of the Town of Knightdale.
By: _____ Date: _____
Town Engineer
These plans are approved by the Town of Knightdale and serve as construction plans for this project.
By: _____ Date: _____
Administrator

FINAL DRAWING - RELEASED FOR CONSTRUCTION

The John R. McAdams Company, Inc.
2905 Meridian Parkway
Durham, NC 27713

phone 919. 361. 5000
fax 919. 361. 2269
license number: C-0293, C-187

www.mcadamsco.com

CLIENT
ALLIANCE GROUP OF NC, LLC
7208 FALLS OF NEUSE RD, SUITE 101
RALEIGH, NORTH CAROLINA 27615
JACOB ANDERSON
PHONE: 919. 239. 9486

REVISIONS

NO.	DATE	
1	----	----
2	----	----
3	----	----
4	----	----
5	----	----
6	----	----

NORTH CAROLINA PROFESSIONAL SEAL 051536 ENGINEER TYLER E. PROBST

DOWNTOWN NORTH AT KNIGHTDALE STATION
CONSTRUCTION DRAWINGS - PHASE 1
N SMITHFIELD ROAD
KNIGHTDALE, NORTH CAROLINA

PLAN INFORMATION

PROJECT NO.	AGN-21002
FILENAME	AGN21002-P4
CHECKED BY	JCM / TEP
DRAWN BY	MRC / LRS / RAD
SCALE	1" = 40'/1" = 4'
DATE	02. 16. 2024

PLAN AND PROFILE
FOURTH AVENUE (FUTURE)
STA. 9+00 THRU STA. 19+50

C5.18

M:\Projects\AGN\AGN21002\04-Production\Engineering\Current Drawings\Construction Drawings Sets\Phase-1\AGN21002-P4.dwg, 2/16/2024 2:15:38 PM, John Martin

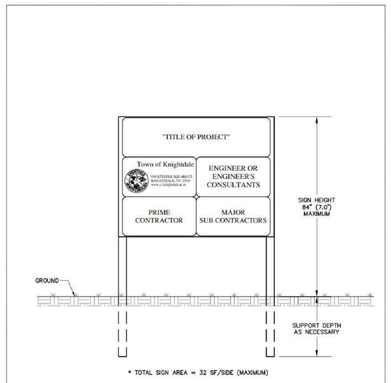

REVISIONS	
DATE	DESCRIPTION

TOWN OF KNIGHTDALE STANDARD DETAILS | PROJECT IDENTIFICATION SIGN | STD. NO. 1.01

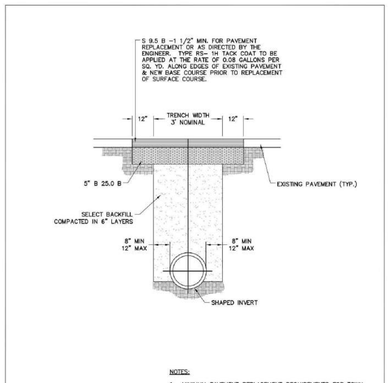

NOTES:

1. MINIMUM PAVEMENT REPLACEMENT REQUIREMENTS FOR TOWN STREETS AS SHOWN.
2. USE OF PAVEMENT REPLACEMENT (AS SHOWN HEREON) ON STATE ROADS SUBJECT TO N.C.D.O.T. APPROVAL.
3. REPAIR PAVEMENT MARKINGS WITH SIMILAR MATERIAL.

REVISIONS	
DATE	DESCRIPTION

TOWN OF KNIGHTDALE STANDARD DETAILS | ASPHALT PAVEMENT REPAIR SECTION | STD. NO. 3.14

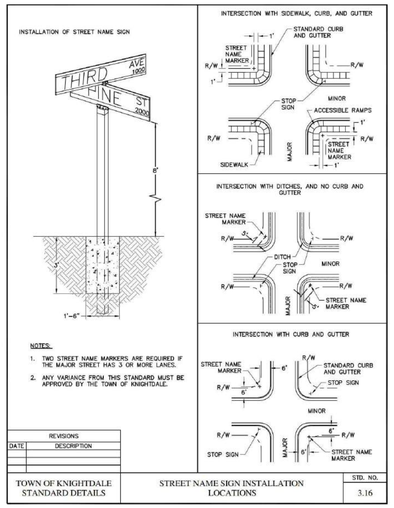

NOTES:

1. TWO STREET NAME MARKERS ARE REQUIRED IF THE MAJOR STREET HAS 3 OR MORE LANES.
2. ANY VARIANCE FROM THIS STANDARD MUST BE APPROVED BY THE TOWN OF KNIGHTDALE.

REVISIONS	
DATE	DESCRIPTION

TOWN OF KNIGHTDALE STANDARD DETAILS | STREET NAME SIGN INSTALLATION LOCATIONS | STD. NO. 3.16

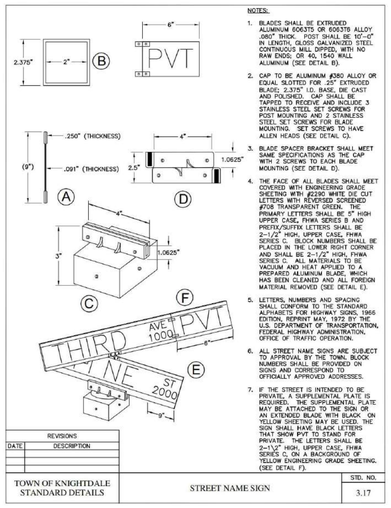

NOTES:

1. BLADES SHALL BE EXTRUDED ALUMINUM 6063T5 OR 6063T6 ALLOY .080" THICK. POST SHALL BE 10'-0" IN LENGTH, GLOSS GALVANIZED STEEL CONTINUOUS MILL DIPPED, WITH NO RAW ENDS; OR 40, 1540 MILL ALUMINUM (SEE DETAIL B).
2. CAP TO BE ALUMINUM #380 ALLOY OR EQUAL SLOTTED FOR .25" EXTRUDED BLADE; 2.375" I.D. BASE DIE CAST AND POLISHED. CAP SHALL BE TAPPED TO RECEIVE AND INCLUDE 3 STAINLESS STEEL SET SCREWS FOR POST MOUNTING AND 2 STAINLESS STEEL SET SCREWS FOR BLADE MOUNTING. SET SCREWS TO HAVE ALLEN HEADS (SEE DETAIL C).
3. BLADE SPACER BRACKET SHALL MEET SAME SPECIFICATIONS AS THE CAP WITH 2 SCREWS TO EACH BLADE MOUNTING (SEE DETAIL D).
4. THE FACE OF ALL BLADES SHALL MEET COVERED WITH ENGINEERING GRADE SHEETING WITH #2390 WHITE DIE CUT LETTERS WITH REVERSED SCREENED #708 TRANSPARENT GREEN. THE PRIMARY LETTERS SHALL BE 5" HIGH UPPER CASE, FHWA SERIES B AND PREFIX/SUFFIX LETTERS SHALL BE 2-1/2" HIGH, UPPER CASE, FHWA SERIES C. BLOCK NUMBERS SHALL BE PLACED IN THE LOWER RIGHT CORNER AND SHALL BE 2-1/2" HIGH, FHWA SERIES C. ALL MATERIALS TO BE VACUUM AND HEAT APPLIED TO A PREPARED ALUMINUM BLADE, WHICH HAS BEEN CLEANED AND ALL FOREIGN MATERIAL REMOVED (SEE DETAIL E).
5. LETTERS, NUMBERS AND SPACING SHALL CONFORM TO THE STANDARD ALPHABETS FOR HIGHWAY SIGNS, 1966 EDITION, REPRINT MAY, 1973 BY THE U.S. DEPARTMENT OF TRANSPORTATION, FEDERAL HIGHWAY ADMINISTRATION, OFFICE OF TRAFFIC OPERATION.
6. ALL STREET NAME SIGNS ARE SUBJECT TO APPROVAL BY THE TOWN. BLOCK NUMBERS SHALL BE PROVIDED ON SIGNS AND CORRESPOND TO OFFICIALLY APPROVED ADDRESSES.
7. IF THE STREET IS INTENDED TO BE PRIVATE, A SUPPLEMENTAL PLATE IS REQUIRED. THE SUPPLEMENTAL PLATE MAY BE ATTACHED TO THE SIGN OR AN EXTENDED BLADE WITH BLACK ON YELLOW SHEETING MAY BE USED. THE SIGN SHALL HAVE BLACK LETTERS THAT SHOW PVT TO STAND FOR PRIVATE. THE LETTERS SHALL BE 2-1/2" HIGH, UPPER CASE, FHWA SERIES C, ON A BACKGROUND OF YELLOW ENGINEERING GRADE SHEETING. (SEE DETAIL F).

REVISIONS	
DATE	DESCRIPTION

TOWN OF KNIGHTDALE STANDARD DETAILS | STREET NAME SIGN | STD. NO. 3.17

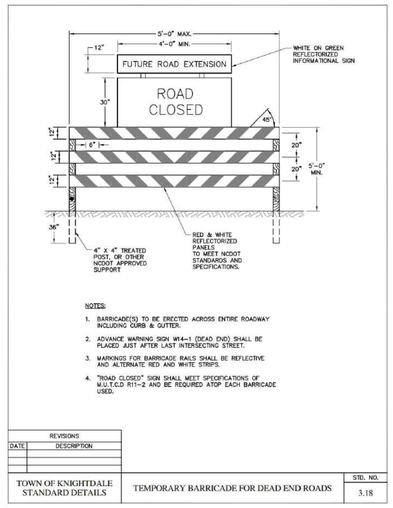

NOTES:

1. BARRICADE(S) TO BE ERECTED ACROSS ENTIRE ROADWAY INCLUDING CURB & GUTTER.
2. ADVANCE WARNING SIGN W14-1 (DEAD END) SHALL BE PLACED JUST AFTER LAST INTERSECTING STREET.
3. MARKINGS FOR BARRICADE RAILS SHALL BE REFLECTIVE AND ALTERNATE RED AND WHITE STRIPS.
4. "ROAD CLOSED" SIGN SHALL MEET SPECIFICATIONS OF M.U.T.C.D R11-2 AND BE REQUIRED ATOP EACH BARRICADE USED.

REVISIONS	
DATE	DESCRIPTION

TOWN OF KNIGHTDALE STANDARD DETAILS | TEMPORARY BARRICADE FOR DEAD END ROADS | STD. NO. 3.18

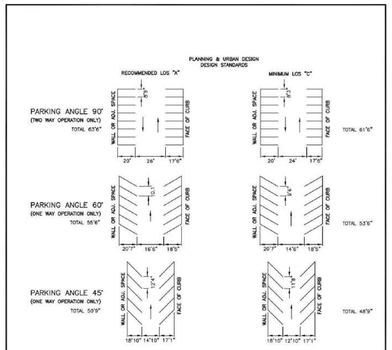

NOTE:

1. FOR ACCESSIBLE PARKING STANDARDS SEE TOWN UNIFIED DEVELOPMENT ORDINANCE.
2. PAVEMENT MARKINGS SHALL BE 4" WHITE PAINT TO TOWN STANDARDS.

REVISIONS	
DATE	DESCRIPTION

TOWN OF KNIGHTDALE STANDARD DETAILS | PARKING STANDARDS | STD. NO. 3.20

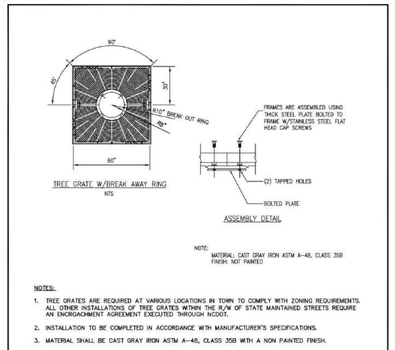

NOTES:

1. TREE GRATES ARE REQUIRED AT VARIOUS LOCATIONS IN TOWN TO COMPLY WITH ZONING REQUIREMENTS. ALL OTHER INSTALLATIONS OF TREE GRATES WITHIN THE R/W OF STATE MAINTAINED STREETS REQUIRE AN ENCROACHMENT AGREEMENT EXECUTED THROUGH NCDOT.
2. INSTALLATION TO BE COMPLETED IN ACCORDANCE WITH MANUFACTURER'S SPECIFICATIONS.
3. MATERIAL SHALL BE CAST GRAY IRON ASTM A-48, CLASS 35B WITH A NON PAINTED FINISH.
4. AN INSPECTION SCHEDULE IS NEEDED FOR TREES THAT WILL BE PLANTED IN THE STREET R/W DUE TO ZONING OR OTHER REQUIREMENTS. LANDSCAPE INSPECTION INCLUDES THE FOLLOWING:

   TREE PIT/WELL OR PLANTING STRIP INSPECTION
   SOIL MIX APPROVALS/INSPECTIONS
   TREE APPROVALS/INSPECTIONS – PRIOR TO PURCHASING THE TREES, TO BE MADE BY TOWN
   TREE PLANTING INSPECTION
   FINAL WALK THROUGH
5. ALL OF THE ABOVE INSPECTIONS WILL BE PERFORMED BY THE TOWN

REVISIONS	
DATE	DESCRIPTION

TOWN OF KNIGHTDALE STANDARD DETAILS | TREE GRATE DETAIL | STD. NO. 3.22

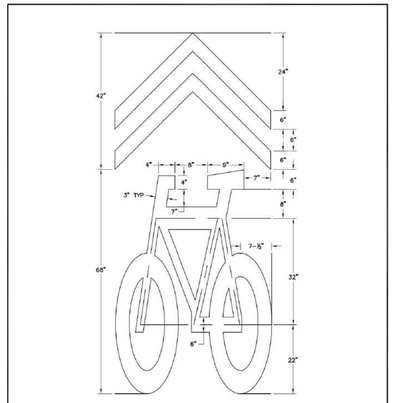

REVISIONS	
DATE	DESCRIPTION

TOWN OF KNIGHTDALE STANDARD DETAILS | BICYCLE SHARED LANE MARKER | STD. NO. 3.27

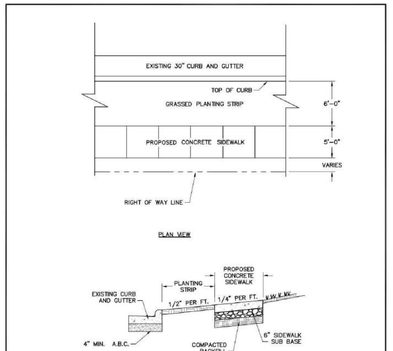

NOTES:

1. TRANSVERSE EXPANSION JOINTS TO BE A MAXIMUM OF 50 FEET APART.
2. CONTROL JOINTS TO BE AT 5 FEET O.C.
3. ALL CONCRETE TO BE FINISHED WITH CURING COMPOUND.
4. SIDEWALK SUB BASE TO BE A MIXTURE OF 70 PERCENT #57 STONE AND ASTM C33 SAND OR EQUAL.

1 of 2

REVISIONS	
DATE	DESCRIPTION

TOWN OF KNIGHTDALE STANDARD DETAILS | CONCRETE SIDEWALKS | STD. NO. 4.04

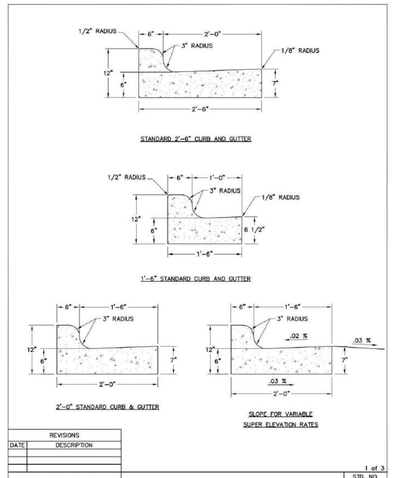

1 of 3

REVISIONS	
DATE	DESCRIPTION

TOWN OF KNIGHTDALE STANDARD DETAILS | CURB AND GUTTER | STD. NO. 4.01

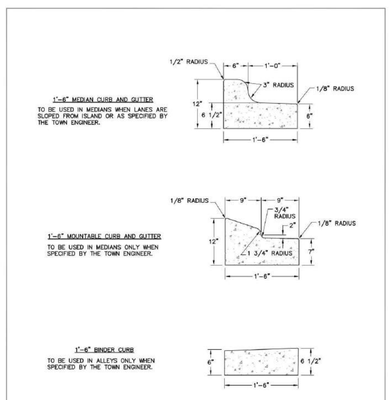

2 of 3

REVISIONS	
DATE	DESCRIPTION

TOWN OF KNIGHTDALE STANDARD DETAILS | CURB AND GUTTER | STD. NO. 4.01

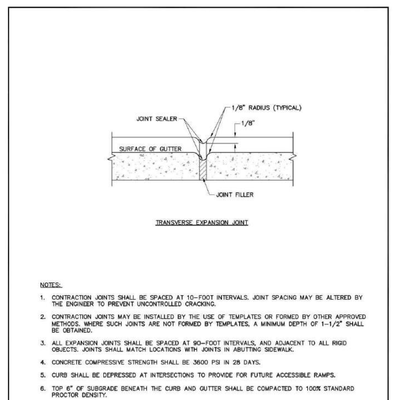

NOTES:

1. CONTRACTION JOINTS SHALL BE SPACED AT 10-FOOT INTERVALS. JOINT SPACING MAY BE ALTERED BY THE ENGINEER TO PREVENT UNCONTROLLED CRACKING.
2. CONTRACTION JOINTS MAY BE INSTALLED BY THE USE OF TEMPLATES OR FORMED BY OTHER APPROVED METHODS. WHERE SUCH JOINTS ARE NOT FORMED BY TEMPLATES, A MINIMUM DEPTH OF 1-1/2" SHALL BE OBTAINED.
3. ALL EXPANSION JOINTS SHALL BE SPACED AT 50-FOOT INTERVALS, AND ADJACENT TO ALL RIGID OBJECTS. JOINTS SHALL MATCH LOCATIONS WITH JOINTS IN ABUTTING SIDEWALK.
4. CONCRETE COMPRESSIVE STRENGTH SHALL BE 3600 PSI IN 28 DAYS.
5. CURB SHALL BE DEPRESSED AT INTERSECTIONS TO PROVIDE FOR FUTURE ACCESSIBLE RAMPS.
6. TOP 6" OF SUBGRADE BENEATH THE CURB AND GUTTER SHALL BE COMPACTED TO 100% STANDARD PROCTOR DENSITY.

REVISIONS	
DATE	DESCRIPTION

TOWN OF KNIGHTDALE STANDARD DETAILS | CURB AND GUTTER | STD. NO. 4.01

3 of 3

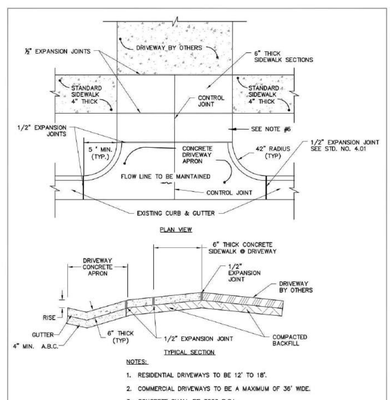

NOTES:

1. RESIDENTIAL DRIVEWAYS TO BE 12' TO 18'.
2. COMMERCIAL DRIVEWAYS TO BE A MAXIMUM OF 36' WIDE.
3. CONCRETE SHALL BE 3000 P.S.I.
4. CONTROL JOINTS NOT TO EXCEED 10' ON CENTER.
5. CURB RADIUS SHALL NOT RISE MORE THAN 1 (ONE) INCH.
6. IF THE DRIVEWAY SECTION BETWEEN THE SIDEWALK AND THE DRIVEWAY APRON IS 18' OR LESS THE SIDEWALK WILL BE WIDENED TO THE APRON AND AN EXPANSION JOINT ELIMINATED.
7. DRIVEWAY SHALL BE A MINIMUM OF 5 FEET FROM PROPERTY LINE.

REVISIONS	
DATE	DESCRIPTION

TOWN OF KNIGHTDALE STANDARD DETAILS | STANDARD DRIVEWAY APRON | STD. NO. 4.03

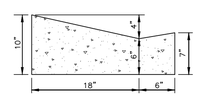

NOTES:

1. 10' MAXIMUM BETWEEN DUMMY JOINTS. 15' MAXIMUM BETWEEN DUMMY JOINTS ON MACHINE POURS.
2. 1/2" EXPANSION JOINT EVERY 50'.
3. 3000 PSI CONCRETE MINIMUM, 4" SLUMP MAXIMUM.
4. LIQUID MEMBRANE CURING COMPOUND SHALL MEET THE REQUIREMENTS OF SECTION 1026-2 OF NCDOT STANDARDS AND SPECIFICATIONS FOR ROADS AND STRUCTURES.
5. ALL CONSTRUCTION JOINTS SHALL BE FILLED WITH FILLER AND SEALER IN ACCORDANCE WITH NCDOT ROADWAY STANDARD DETAIL 846.01. THE JOINT MATERIAL SHALL CONFORM TO SECTION 1028-2 OF THE NCDOT STANDARDS AND SPECIFICATIONS FOR ROADS AND STRUCTURES.
6. REFER TO NCDOT DETAIL 846.01 FOR CURB AND GUTTER SUPERELEVATION RATES.

24" VALLEY TYPE GUTTER

N.T.S.

WOODEN GUARDRAIL FOR REFERENCE. CONTRACTOR TO SUBMIT DETAIL TO TOWN FOR APPROVAL

Town Certification. This design has been reviewed by the Engineer for the Town of Knightdale, and to the best of my knowledge and belief, it conforms to the requirements established in the Standard Specifications of the Town of Knightdale.
By: _____ Date: _____
Town Engineer
These plans are approved by the Town of Knightdale and serve as construction plans for this project.
By: _____ Date: _____
Administrator

FINAL DRAWING - RELEASED FOR CONSTRUCTION

MCADAMS
The John R. McAdams Company, Inc.
2905 Meridian Parkway
Durham, NC 27713

phone 919. 361. 5000
fax 919. 361. 2269
license number: C-0293, C-187

www.mcadamsco.com

CLIENT

ALLIANCE GROUP OF NC, LLC
7208 FALLS OF NEUSE RD, SUITE 101
RALEIGH, NORTH CAROLINA 27615
JACOB ANDERSON
PHONE: 919. 239. 9486

AGNC

DOWNTOWN NORTH AT KNIGHTDALE STATION
CONSTRUCTION DRAWINGS
N SMITHFIELD ROAD
KNIGHTDALE, NORTH CAROLINA

NORTH CAROLINA PROFESSIONAL SEAL 051536 ENGINEER TYLER E. PROBST

REVISIONS

NO.	DATE	
1	----	----
2	----	----
3	----	----
4	----	----
5	----	----
6	----	----

PLAN INFORMATION

PROJECT NO.	AGN-21002
FILENAME	AGN21002-D1
CHECKED BY	TEP
DRAWN BY	RJF
SCALE	N/A
DATE	02. 16. 2024

SHEET

SITE DETAILS

C8.00

M:\Projects\AGN\AGN21002\04-Production\Engineering\Current Drawings\Construction Drawings-Sets\Phase-1\AGN21002-D1.dwg, 2/16/2024 2:28:56 PM, John Martin

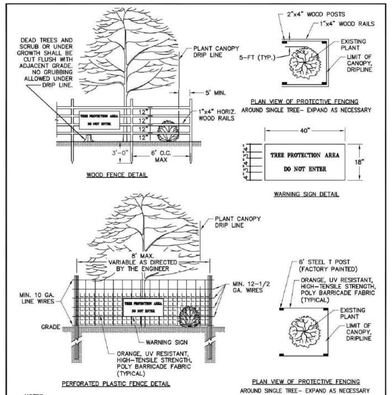

NOTES:
1. REMOVE ALL BARRIERS UPON COMPLETION OF PROJECT.
2. LANDSCAPING PLANTS SHALL SHOW LOCATIONS OF ALL TREE PROTECTION FENCES.
3. ALL PLANTS TO BE SAVED SHALL BE PROTECTED BY FENCING AS SHOWN IN THIS DETAIL.
4. CONTRACTOR SHALL INSTALL FENCING PRIOR TO BEGINNING ANY CONSTRUCTION OR GRADING ACTIVITY.
5. CONTRACTOR SHALL CALL FOR INSPECTION AND APPROVAL OF PROTECTIVE FENCING PRIOR TO BEGINNING ANY CONSTRUCTION OR GRADING.
6. PROTECTIVE FENCING SHALL BE LOCATED 5' OUTSIDE DRIPLINE OF TREES AND 1' MINIMUM OUTSIDE SHRUBS OR OTHER PLANTS.

REVISIONS	
DATE	DESCRIPTION

TOWN OF KNIGHTDALE STANDARD DETAILS | PLANT PROTECTIVE FENCING | STD. NO. 2.10

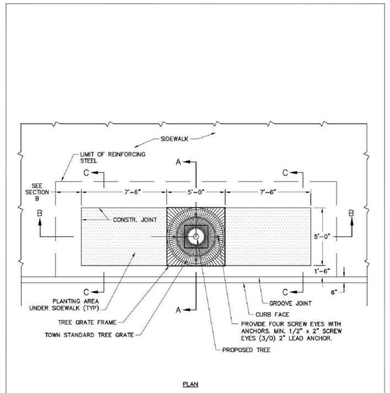

REVISIONS	
DATE	DESCRIPTION

1 of 4

TOWN OF KNIGHTDALE STANDARD DETAILS | TREE PIT WITH GRATE IN SIDEWALK | STD. NO. 3.24

NOTE:
THE PAVEMENT SECTIONS SHOWN ARE PRELIMINARY. THE CONTRACTOR SHALL VERIFY PAVEMENT DESIGN WITH THE GEOTECHNICAL ENGINEER PRIOR TO PROCEEDING WITH CONSTRUCTION.

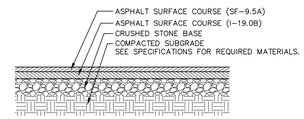

SUBGRADE COMPACTED TO A MINIMUM 98% STANDARD PROCTOR MAXIMUM DRY DENSITY (ASTM D 698) REFER TO SOILS REPORT IF AVAILABLE.

ON-SITE ASPHALT HEAVY DUTY TRAFFIC PAVEMENT DETAIL

N.T.S.

NOTE:
THE PAVEMENT SECTIONS SHOWN ARE PRELIMINARY. THE CONTRACTOR SHALL VERIFY PAVEMENT DESIGN WITH THE GEOTECHNICAL ENGINEER PRIOR TO PROCEEDING WITH CONSTRUCTION.

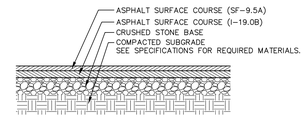

SUBGRADE COMPACTED TO A MINIMUM 98% STANDARD PROCTOR MAXIMUM DRY DENSITY (ASTM D 698) REFER TO SOILS REPORT IF AVAILABLE.

ON-SITE ASPHALT PARKING PAVEMENT DETAIL

N.T.S.

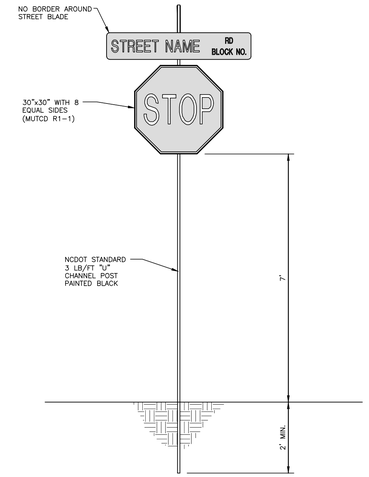

STREET/STOP SIGN DETAIL

N.T.S.

TRAFFIC SIGNAGE - *Residential area*
Standard channel post painted black

CONTRACTOR TO SUBMIT SHOP DRAWING TO TOWN OF KNIGHTDALE FOR APPROVAL

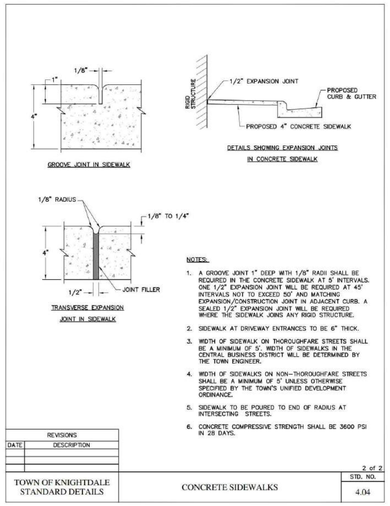

NOTES:
1. A GROOVE JOINT 1" DEEP WITH 1/8" RADII SHALL BE REQUIRED IN THE CONCRETE SIDEWALK AT 5' INTERVALS. ONE 1/2" EXPANSION JOINT WILL BE REQUIRED AT 45' INTERVALS NOT TO EXCEED 50' AND MATCHING EXPANSION/CONSTRUCTION JOINT IN ADJACENT CURB. A SEALED 1/2" EXPANSION JOINT WILL BE REQUIRED WHERE THE SIDEWALK JONS ANY RIGID STRUCTURE.
2. SIDEWALK AT DRIVEWAY ENTRANCES TO BE 6" THICK.
3. WIDTH OF SIDEWALK ON THOROUGHFARE STREETS SHALL BE A MINIMUM OF 5'. WIDTH OF SIDEWALKS IN THE CENTRAL BUSINESS DISTRICT WILL BE DETERMINED BY THE TOWN ENGINEER.
4. WIDTH OF SIDEWALKS ON NON-THOROUGHFARE STREETS SHALL BE A MINIMUM OF 5' UNLESS OTHERWISE SPECIFIED BY THE TOWN'S UNIFIED DEVELOPMENT ORDINANCE.
5. SIDEWALK TO BE POURED TO END OF RADIUS AT INTERSECTING STREETS.
6. CONCRETE COMPRESSIVE STRENGTH SHALL BE 3600 PSI IN 28 DAYS.

REVISIONS	
DATE	DESCRIPTION

2 of 2

TOWN OF KNIGHTDALE STANDARD DETAILS | CONCRETE SIDEWALKS | STD. NO. 4.04

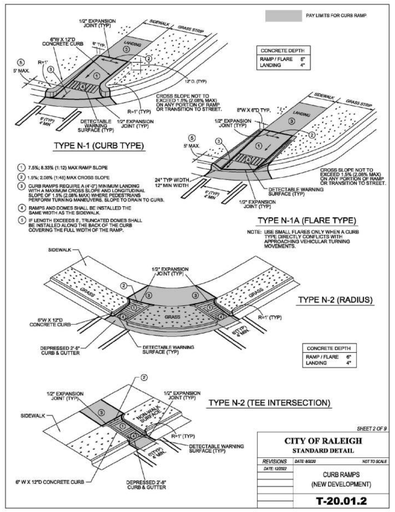

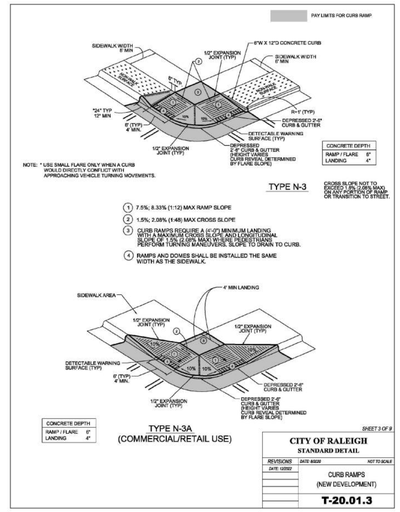

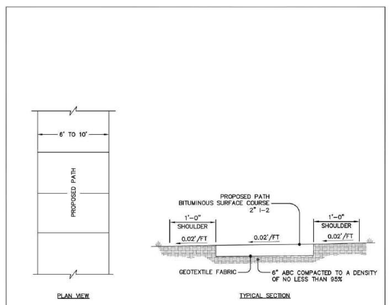

NOTES:
1. CROSS SLOPE DIRECTION VARIES. SEE LAYOUT PLANS FOR DIRECTION OF SLOPE.
2. CONTRACTOR IS RESPONSIBLE FOR REESTABLISHING ALL SLOPES DISTURBED BY CONSTRUCTION.

REVISIONS	
DATE	DESCRIPTION

TOWN OF KNIGHTDALE STANDARD DETAILS | STANDARD MULTI-USE PATH GREENWAY | STD. NO. 4.09

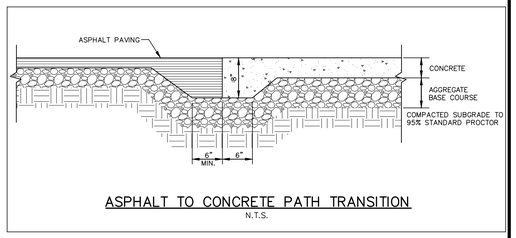

ASPHALT TO CONCRETE PATH TRANSITION

N.T.S.

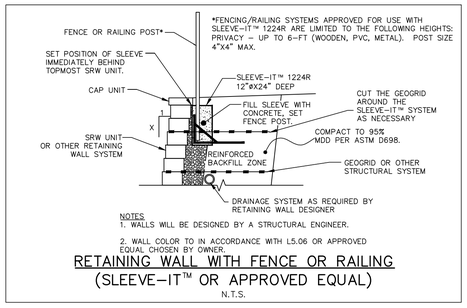

NOTES
1. WALLS WILL BE DESIGNED BY A STRUCTURAL ENGINEER.
2. WALL COLOR TO IN ACCORDANCE WITH L5.06 OR APPROVED EQUAL CHOSEN BY OWNER.

RETAINING WALL WITH FENCE OR RAILING (SLEEVE-IT™ OR APPROVED EQUAL)

N.T.S.

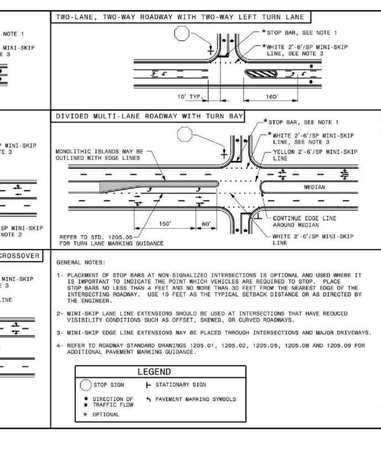

GENERAL NOTES:
1- PLACEMENT OF STOP BARS AT NON-SIGNALIZED INTERSECTIONS IS OPTIONAL AND USED WHERE IT IS IMPORTANT TO INDICATE THE POINT WHICH VEHICLES ARE REQUIRED TO STOP. PLACE STOP BARS NO LESS THAN 4 FEET AND NO MORE THAN 30 FEET FROM THE NEAREST EDGE OF THE INTERSECTING ROADWAY. USE 10 FEET AS THE TYPICAL SETBACK DISTANCE OR AS DIRECTED BY THE ENGINEER.
2- WIDE-SKIP LANE LINE EXTENSIONS SHOULD BE USED AT INTERSECTIONS THAT HAVE REDUCED VISIBILITY CONDITIONS SUCH AS OFFSET, SKEWED, OR CURVED ROADWAYS.
3- WIDE-SKIP EDGE LINE EXTENSIONS MAY BE PLACED THROUGH INTERSECTIONS AND MAJOR DRIVEWAYS.
4- REFER TO ROADWAY STANDARD DRAWINGS 1205.01, 1205.02, 1205.05, 1205.08 AND 1205.09 FOR ADDITIONAL PAVEMENT MARKING GUIDANCE.

LEGEND
STOP SIGN | STATIONARY SIGN
DIRECTION OF TRAFFIC FLOW | PAVEMENT MARKING SYMBOLS
OPTIONAL

STATE OF NORTH CAROLINA DEPT. OF TRANSPORTATION DIVISION OF HIGHWAYS RALEIGH, N.C.
1-18
ROADWAY STANDARD DRAWING FOR **PAVEMENT MARKINGS** INTERSECTIONS
SHEET 3 OF 3
1205.04

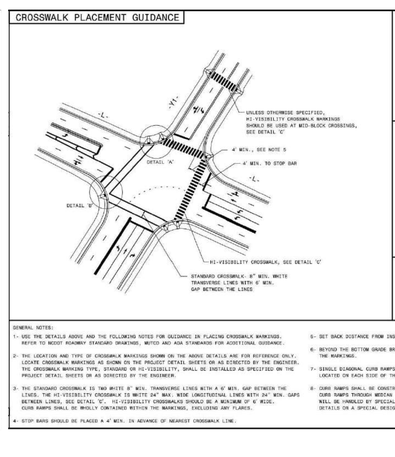

GENERAL NOTES:
1- USE THE DETAILS ABOVE AND THE FOLLOWING NOTES FOR GUIDANCE IN PLACING CROSSWALK MARKINGS. REFER TO NCDOT ROADWAY STANDARD DRAWINGS, MUTCD AND ADA STANDARDS FOR ADDITIONAL GUIDANCE.
2- THE LOCATION AND TYPE OF CROSSWALK MARKINGS SHOWN ON THE ABOVE DETAILS ARE FOR REFERENCE ONLY. LOCATE CROSSWALK MARKINGS AS SHOWN ON THE PROJECT DETAIL SHEETS OR AS DIRECTED BY THE ENGINEER. THE CROSSWALK MARKING TYPE, STANDARD OR HI-VISIBILITY, SHALL BE INSTALLED AS SPECIFIED ON THE PROJECT DETAIL SHEETS OR AS DIRECTED BY THE ENGINEER.
3- THE STANDARD CROSSWALK IS TWO WHITE 6" WIDE, TRANSVERSE LINES WITH A 6' WIDE GAP BETWEEN THE LINES. THE HI-VISIBILITY CROSSWALK IS WHITE 24" WIDE LONGITUDINAL LINES WITH 24" WIDE GAPS BETWEEN LINES, SEE DETAIL 'C'. HI-VISIBILITY CROSSWALKS SHOULD BE A MINIMUM OF 6' WIDE. CURB RAMPS SHALL BE WHOLLY CONTAINED WITHIN THE MARKINGS, EXCLUDING GAP FLARES.
4- STOP BARS SHOULD BE PLACED A 4' MIN. IN ADVANCE OF NEAREST CROSSWALK LINE.
5- SET BACK DISTANCE FROM INSIDE CROSSWALK MARKING TO NEAREST EDGE OF TRAVEL IS 4' MIN.
6- BEYOND THE BOTTOM GRADE BREAK, A CLEAR SPACE OF 4' X 4' MIN. SHALL BE PROVIDED WITHIN THE MARKINGS.
7- SINGLE DIAGONAL CURB RAMPS WITH FLARED SIDES SHALL HAVE A SEGMENT OF CURB 2' MIN. LONG LOCATED ON EACH SIDE OF THE CURB RAMP AND WITHIN THE MARKED CROSSING, SEE DETAIL 'B'.
8- CURB RAMPS SHALL BE CONSTRUCTED IN ACCORDANCE TO THE LATEST NCDOT ROADWAY STANDARD DRAWINGS. CURB RAMPS THROUGH MEDIAN ISLANDS, SINGLE RAMPS AT DUAL CROSSWALKS OR LIMITED R/W SITUATIONS, WILL BE HANDLED BY SPECIAL DETAILS. CONTACT THE CONTRACT STANDARDS AND DEVELOPMENT UNIT FOR DETAILS ON A SPECIAL DESIGN.

STATE OF NORTH CAROLINA DEPT. OF TRANSPORTATION DIVISION OF HIGHWAYS RALEIGH, N.C.
1-18
ROADWAY STANDARD DRAWING FOR **PAVEMENT MARKINGS** PEDESTRIAN CROSSWALKS
SHEET 1 OF 1
1205.07

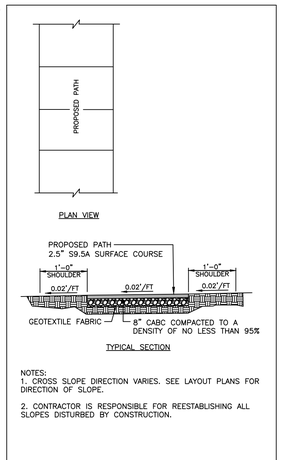

NOTES:
1. CROSS SLOPE DIRECTION VARIES. SEE LAYOUT PLANS FOR DIRECTION OF SLOPE.
2. CONTRACTOR IS RESPONSIBLE FOR REESTABLISHING ALL SLOPES DISTURBED BY CONSTRUCTION.

HEAVY DUTY MULTI-USE PATH GREENWAY

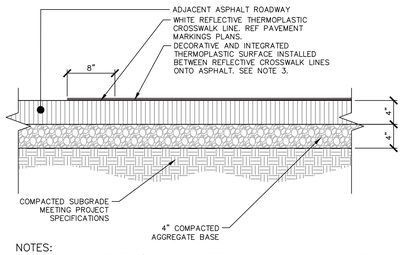

SEE PROVIDED EXAMPLE IMAGERY

NOTES:
1. CONTROL JOINTS LOCATED 4' O.C. ALONG PATTERN LINES. EXPANSION JOINTS LOCATED MAXIMUM 12' O.C. ALONG PATTERN LINES AND ADJACENT PAVING OR MASONRY ELEMENTS. JOINTS TO ALIGN WITH ADJACENT PAVING JOINTS.
2. CONTRACTOR TO PROVIDE COLOR SAMPLES FOR APPROVAL BY LANDSCAPE ARCHITECT AND OWNER PRIOR TO PURCHASE AND INSTALL. MOCK UP FOR APPROVAL PRIOR TO FULL INSTALLATION. MOCK UP MAY BE UTILIZED AS PART OF FINAL INSTALLATION IF APPROVED.
3. INTEGRATED THERMOPLASTIC SURFACE BY TRAFFICPATTERNS OR APPROVED EQUAL INSTALLED PER MANUFACTURER'S REQ'S. PATTERN TO BE HONEYCOMB IN BLUE.

DECORATIVE THERMOPLASTIC CROSSWALK

SCALE: 1"=1'-0"

Town Certification. This design has been reviewed by the Engineer for the Town of Knightdale, and to the best of my knowledge and belief, it conforms to the requirements established in the Standard Specifications of the Town of Knightdale.
By: _____ Date: _____
Town Engineer
These plans are approved by the Town of Knightdale and serve as construction plans for this project.
By: _____ Date: _____
Administrator

FINAL DRAWING - RELEASED FOR CONSTRUCTION

M:\Projects\AGN\AGN21002\04-Production\Engineering\Current Drawings\Construction Drawings Sets\Phase-1\AGN21002-D1.dwg, 7/16/2024 2:28:59 PM, John Martin

MCADAMS
The John R. McAdams Company, Inc.
2905 Meridian Parkway
Durham, NC 27713

phone 919. 361. 5000
fax 919. 361. 2269
license number: C-0293, C-187

www.mcadamsco.com

CLIENT

ALLIANCE GROUP OF NC, LLC
7208 FALLS OF NEUSE RD, SUITE 101
RALEIGH, NORTH CAROLINA 27615
JACOB ANDERSON
PHONE: 919. 239. 9486

AGNC

DOWNTOWN NORTH AT KNIGHTDALE STATION
CONSTRUCTION DRAWINGS
N SMITHFIELD ROAD
KNIGHTDALE, NORTH CAROLINA

NORTH CAROLINA PROFESSIONAL SEAL 051536 ENGINEER TYLER E. PROBST

REVISIONS

NO.	DATE	
1	----	----
2	----	----
3	----	----
4	----	----
5	----	----
6	----	----

PLAN INFORMATION

PROJECT NO.	AGN-21002
FILENAME	AGN21002-D1
CHECKED BY	TEP
DRAWN BY	RJF
SCALE	N/A
DATE	02. 16. 2024

SHEET

SITE DETAILS

C8.01

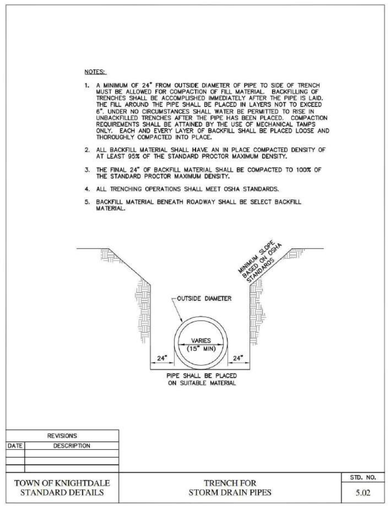

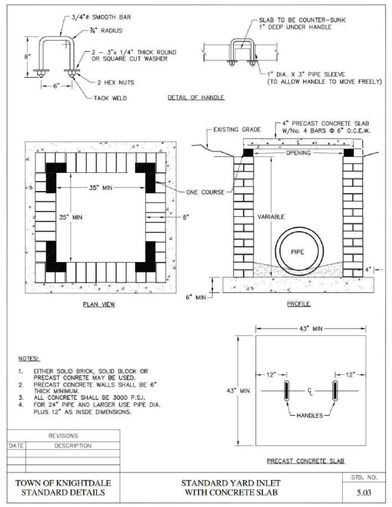

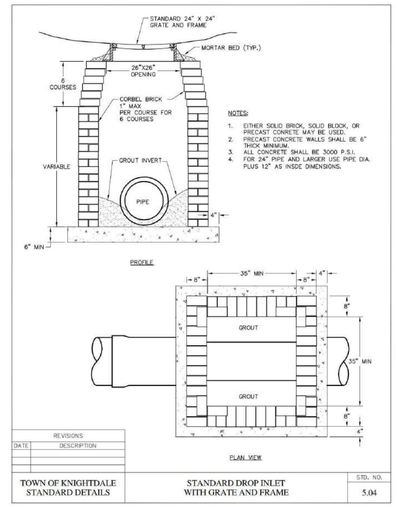

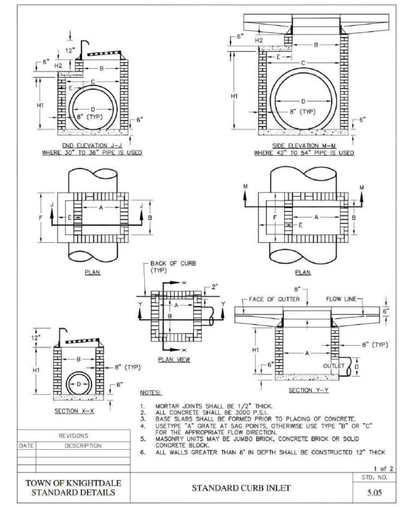

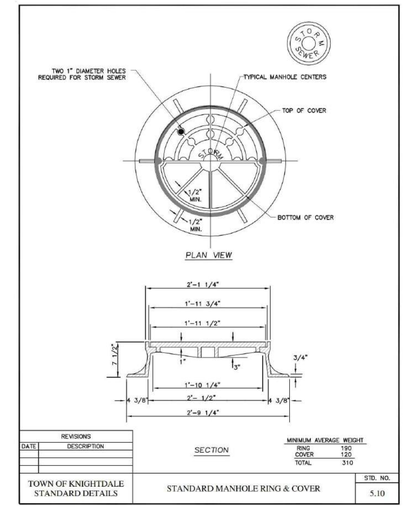

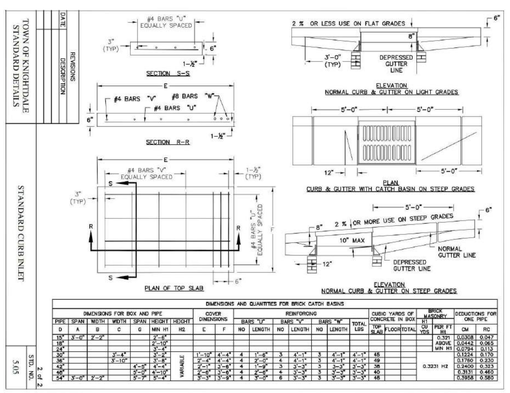

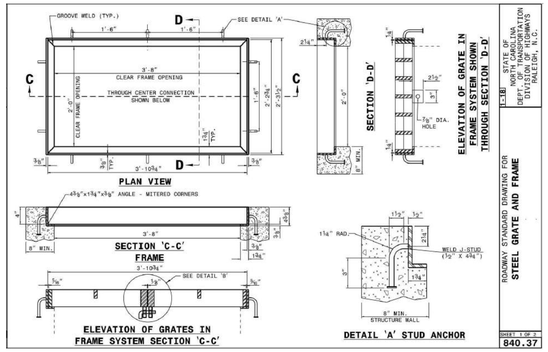

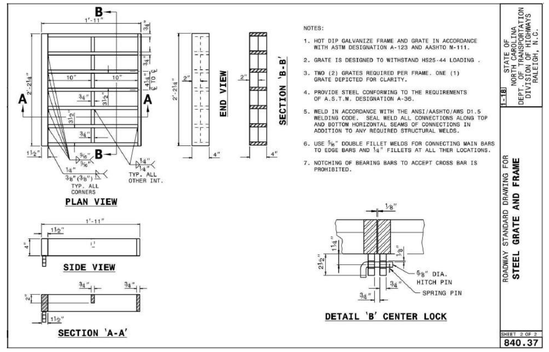

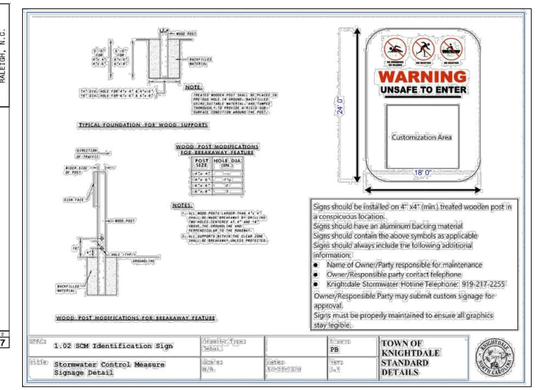

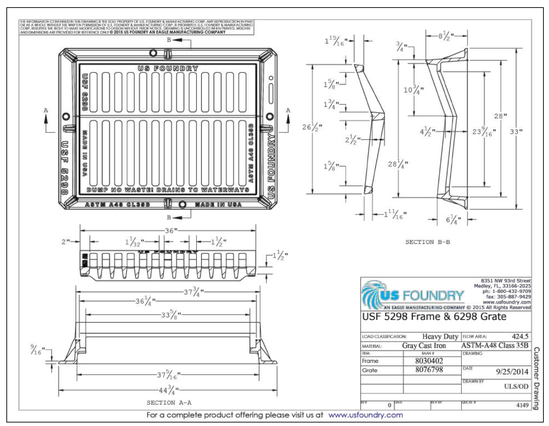

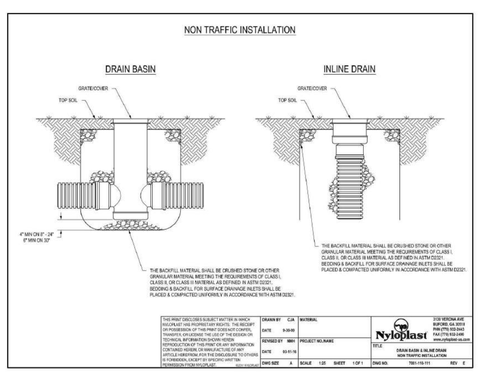

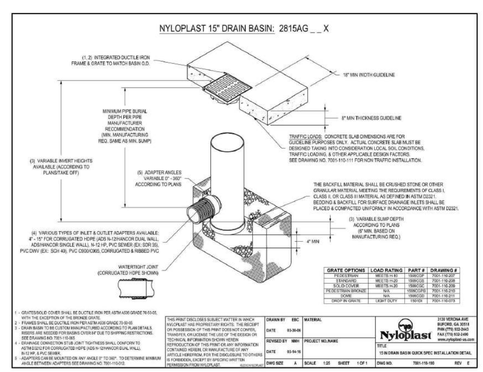

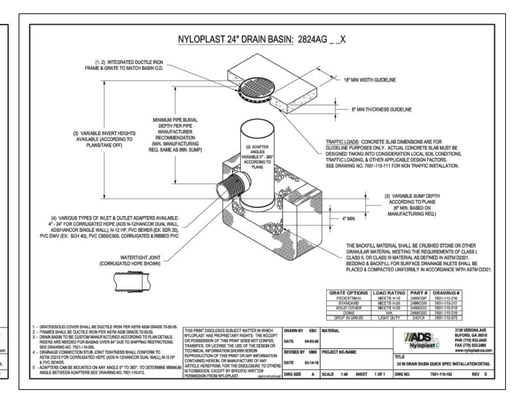

NYLOPLAST INLET INFORMATION

Y1-171 (Standard) T/G=286.10 INV OUT=284.36	Y1-175 (Standard) T/G=294.59 INV IN=291.14 (Y1-176) INV OUT=291.04	Y1-180 (Standard) T/G=289.69 INV IN=286.88 (Y1-181) INV OUT=286.78	Y1-184 (Standard) T/G=291.90 INV IN=289.24	Y1-188 (Standard) T/G=299.50 INV IN=294.46 (Y1-189) INV OUT=294.36	Y1-265 (Standard) T/G=302.16 INV IN=298.75 (Y1-266) INV OUT=298.65	Y1-269 (Standard) T/G=306.90 INV IN=303.20 (Y1-270) INV OUT=303.10	Y1-273 (Standard) T/G=310.20 INV IN=306.80 (Y1-274) INV OUT=306.70	Y1-281 (Standard) T/G=299.10 INV IN=294.60 (Y1-282) INV OUT=294.50	Y1-285 (Standard) T/G=304.10 INV OUT=300.22	Y1-292 (Standard) T/G=306.80 INV IN=303.20 (Y1-293) INV OUT=303.10	Y1-296 (Standard) T/G=310.00 INV OUT=306.30	Y1-300 (Standard) T/G=317.50 INV IN=315.04 (Y1-301) INV OUT=314.18
Y1-172 (Standard) T/G=288.55 INV IN=285.29 (Y1-173) INV IN=283.00 (Y1-171) INV OUT=283.00	Y1-176 (Standard) T/G=297.81 INV IN=294.06 (Y1-177) INV OUT=293.96	Y1-181 (Standard) T/G=289.70 INV IN=287.63 (Y1-182) INV OUT=287.63	Y1-185 (Standard) T/G=296.28 INV IN=292.89 (Y1-186) INV OUT=289.15	Y1-189 (Standard) T/G=300.25 INV IN=294.98 (Y1-190) INV OUT=294.88	Y1-266 (Standard) T/G=303.10 INV IN=299.80 (Y1-267) INV OUT=299.70	Y1-270 (Standard) T/G=307.90 INV IN=304.30 (Y1-271) INV OUT=304.20	Y1-274 (Standard) T/G=311.40 INV IN=308.10 (Y1-275) INV OUT=308.00	Y1-282 (Standard) T/G=298.80 INV IN=295.60 (Y1-283) INV OUT=295.60	Y1-286 (Standard) T/G=301.80 INV IN=299.08 (Y1-287) INV OUT=298.98	Y1-293 (Standard) T/G=307.85 INV IN=303.80 (Y1-294) INV OUT=303.70	Y1-297 (Standard) T/G=320.00 INV OUT=317.30	Y1-301 (Standard) T/G=319.50 INV IN=315.98 (Y1-302) INV OUT=315.88
Y1-173 (Standard) T/G=291.50 INV IN=287.45 (Y1-174) INV OUT=287.35	Y1-177 (Standard) T/G=300.48 INV IN=294.98 (Y1-178) INV OUT=294.88	Y1-182 (Standard) T/G=291.00 INV IN=288.16 (Y1-183) INV OUT=288.06	Y1-186 (Standard) T/G=297.50 INV IN=293.42 (Y1-187) INV OUT=293.32	Y1-190 (Standard) T/G=300.75 INV IN=295.50 (Y1-191) INV OUT=295.40	Y1-267 (Standard) T/G=304.40 INV IN=301.20 (Y1-268) INV OUT=301.10	Y1-271 (Standard) T/G=308.50 INV IN=305.00 (Y1-272) INV OUT=304.90	Y1-275 (Standard) T/G=312.40 INV IN=309.00 (Y1-276) INV OUT=309.00	Y1-283 (Standard) T/G=300.80 INV IN=297.30 (Y1-284) INV OUT=297.20	Y1-287 (Standard) T/G=299.53 INV OUT=299.53	Y1-294 (Standard) T/G=309.27 INV IN=305.00 (Y1-295) INV OUT=304.90	Y1-298 (Standard) T/G=311.86 INV IN=308.84 (Y1-299) INV OUT=308.74	Y1-302 (Standard) T/G=320.10 INV OUT=316.46
Y1-174 (Standard) T/G=293.45 INV IN=290.42 (Y1-175) INV OUT=289.12	Y1-178 (Standard) T/G=298.37 INV OUT=295.80	Y1-183 (Standard) T/G=290.75 INV IN=288.62 (Y1-184) INV OUT=288.52	Y1-187 (Standard) T/G=298.75 INV IN=293.94 (Y1-188) INV OUT=293.84	Y1-191 (Standard) T/G=299.57 INV OUT=295.92	Y1-268 (Standard) T/G=305.80 INV IN=302.20 (Y1-269) INV OUT=302.10	Y1-272 (Standard) T/G=308.71 INV IN=305.39 (Y1-273) INV OUT=305.29	Y1-276 (Standard) T/G=313.16 INV IN=310.05 (Y1-277) INV OUT=309.95	Y1-284 (Standard) T/G=303.10 INV IN=298.72 (Y1-286) INV IN=299.72 (Y1-285) INV OUT=298.52	Y1-291 (Standard) T/G=306.10 INV IN=302.70 (Y1-292) INV OUT=302.70	Y1-295 (Standard) T/G=308.80 INV IN=305.50 (Y1-296) INV OUT=305.50		

Town Certification. This design has been reviewed by the Engineer for the Town of Knightdale, and to the best of my knowledge and belief, it conforms to the requirements established in the Standard Specifications of the Town of Knightdale.
By: _____ Date: _____
Town Engineer
These plans are approved by the Town of Knightdale and serve as construction plans for this project.
By: _____ Date: _____
Administrator

FINAL DRAWING - RELEASED FOR CONSTRUCTION

DOWNTOWN NORTH AT KNIGHTDALE STATION
CONSTRUCTION DRAWINGS
N SMITHFIELD ROAD
KNIGHTDALE, NORTH CAROLINA

McADAMS
The John R. McAdams Company, Inc.
2905 Meridian Parkway
Durham, NC 27713
phone 919. 361. 5000
fax 919. 361. 2269
license number: C-0293, C-187
www.mcadamsco.com

CLIENT

ALLIANCE GROUP OF NC, LLC
7208 FALLS OF NEUSE RD, SUITE 101
RALEIGH, NORTH CAROLINA 27615
JACOB ANDERSON
PHONE: 919. 239. 9486

AGNC

NORTH CAROLINA PROFESSIONAL SEAL 051536 ENGINEER TYLER E. PROBST

REVISIONS

NO.	DATE	
1	----	----
2	----	----
3	----	----
4	----	----
5	----	----
6	----	----

PLAN INFORMATION

PROJECT NO.	AGN-21002
FILENAME	AGN21002-D1
CHECKED BY	TEP
DRAWN BY	RJF
SCALE	N/A
DATE	02. 16. 2024

SHEET

STORM DETAILS

C8.02

M:\Projects\AGN\AGN21002\04-Production\Engineering\Current Drawings\Construction Drawings Set\Phase-1\AGN21002-D1.dwg, 2/18/2024 9:31:34 PM, Megan Clifford

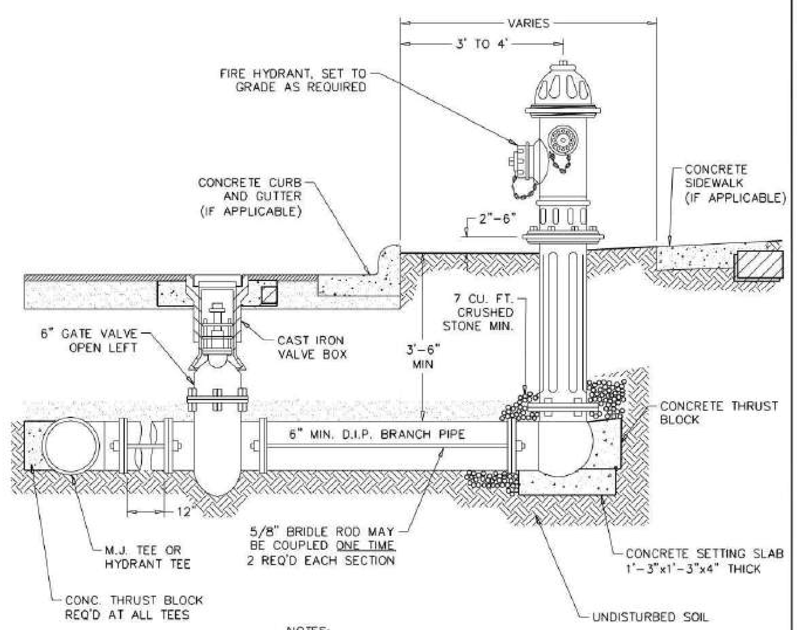

NOTES:

HYDRANTS SHALL BE EQUIPPED WITH ONE 5" STORZ NOZZLE AND TWO 2-1/2" NOZZLES WITH NATIONAL STANDARD THREADS.

CONCRETE BLOCKING SHALL BE POURED SO AS TO LEAVE ALL FITTING BOLTS AND FLANGES EXPOSED.

IF HYDRANT IS LOCATED IN RURAL AREA, HYDRANT SHALL BE LOCATED APPROX. 1' INSIDE R/W.

IF HYDRANT IS LOACTED IN DOT R/W, USE DOT STANDARDS FOR LOCATION OF HYDRANT.

REVISIONS	
DATE	DESCRIPTION
7/08	CORRECTED NOZZLE SIZE & TYPE

TOWN OF KNIGHTDALE STANDARD DETAILS | STANDARD HYDRANT INSTALLATION - URBAN | STD. NO. 6.02

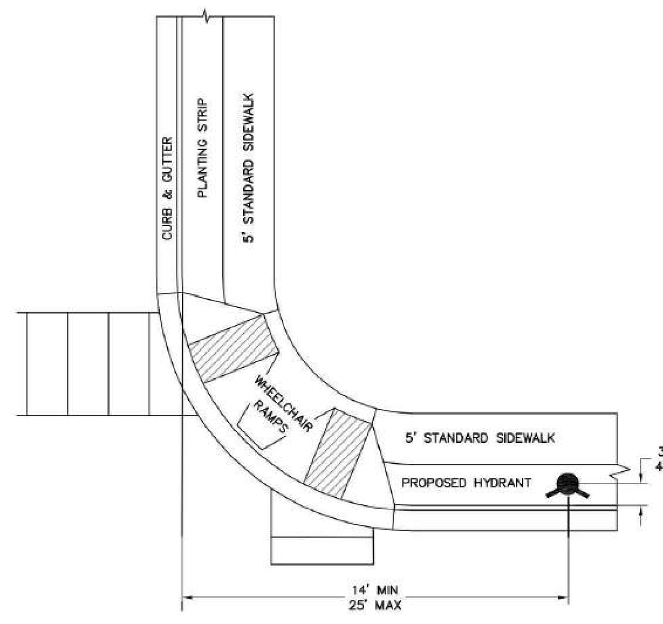

REVISIONS	
DATE	DESCRIPTION

TOWN OF KNIGHTDALE STANDARD DETAILS | STANDARD HYDRANT LOCATION | STD. NO. 6.03

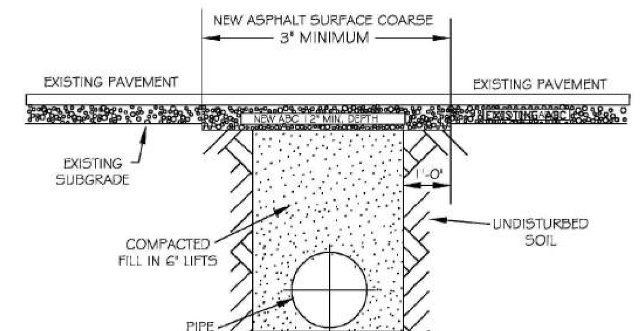

NOTES:

1. THE PAVEMENT CUT SHALL BE DEFINED BY A STRAIGHT EDGE AND CUT WITH AN APPROPRIATE SAW CUT MACHINE.
2. THE TRENCH SUBGRADE MATERIAL SHALL BE BACKFILLED WITH SUITABLE MATERIAL AND COMPACTED TO A DENSITY OF AT LEAST 95% OF THAT OBTAINED BY COMPACTING A SAMPLE OF THE MATERIAL IN ACCORDANCE WITH AASHTO T-99 AS MODIFIED BY NCDOT.
3. THE FINAL 1' OF FILL SHALL CONSIST OF ABC MATERIAL COMPACTED TO A DENSITY EQUAL TO 100% OF THAT OBTAINED BY COMPACTING A SAMPLE OF THE MATERIAL IN ACCORDANCE WITH AASHTO T-80 AS MODIFIED BY NCDOT.
4. THE ENTIRE THICKNESS/ VERTICAL EDGE OF CUT SHALL BE TACKED.
5. THE SAME DEPTH OF PAVEMENT MATERIAL WHICH EXISTS SHALL BE REINSTALLED, BUT IN NO CASE SHALL THE ASPHALT BE LESS THAN 3" THICK.
6. THE ASPHALT PAVEMENT MATERIAL SHALL BE INSTALLED AND COMPACTED THOROUGHLY WITH A SMOOTH DRUM ROLLER TO ACHIEVE A SMOOTH LEVEL PATCH.
7. REFER TO CITY OF RALEIGH STANDARDS FOR TRENCHES AND PIPE BEDDING, W-3. FOR ADDITIONAL DETAILS.
8. NO HAND PATCHING ALLOWED.
9. PAVEMENT CUTS WITHIN NCDOT ROW SHALL CONFORM TO THE APPROVED ON SITE ENCROACHMENT PERMIT.

CITY OF RALEIGH
DEPARTMENT OF PUBLIC UTILITIES
STANDARD ASPHALT PAVEMENT PATCH DETAIL

DWG. NO.	REVISIONS	DATE	REVISIONS	DATE
W-2	RRH	3-31-00	A.B.B.	4-16-04
	D.W.C.	11-1-99	J.P.S.	10-29-10

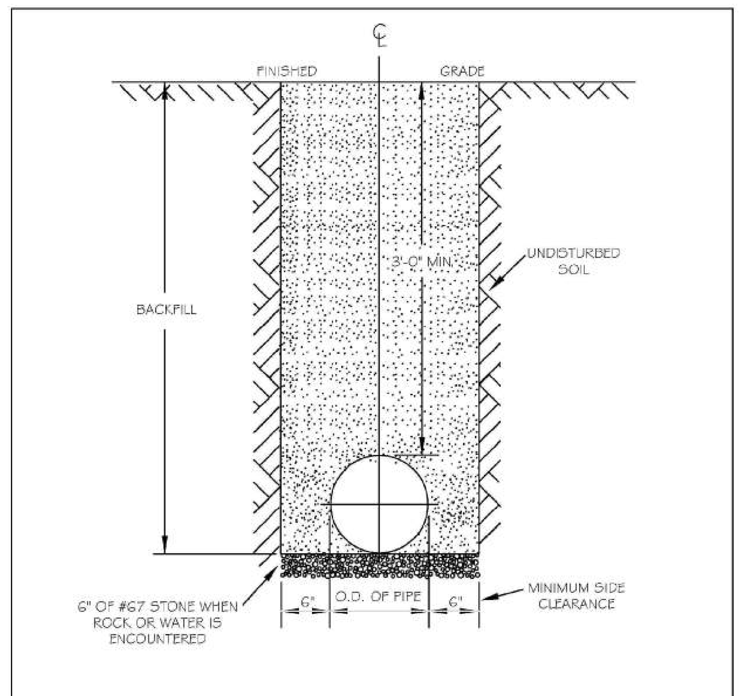

NOTES:
1. TRENCHES REQUIRING SHORING AND BRACING, DIMENSIONS SHALL BE TAKEN FROM THE INSIDE FACE OF THE SHORING AND BRACING.
2. NO ROCKS OR BOULDERS 4" OR LARGER TO BE USED IN BACKFILL.
3. ALL BACKFILL MATERIAL SHALL BE SUITABLE NATIVE MATERIAL.
4. BACKFILL SHALL BE TAMPED IN 6" LIFTS.
5. ACHIEVE 95% COMPACTION IN BACKFILL.

CITY OF RALEIGH
DEPARTMENT OF PUBLIC UTILITIES
TRENCH BOTTOM DIMENSIONS & BACKFILLING REQUIREMENTS FOR DUCTILE IRON

DWG. NO.	REVISIONS	DATE	REVISIONS	DATE
W-3	D.W.C.	9-3-99	ABB	2-15-05
	RRH	3-31-00	J.P.S.	10-29-10

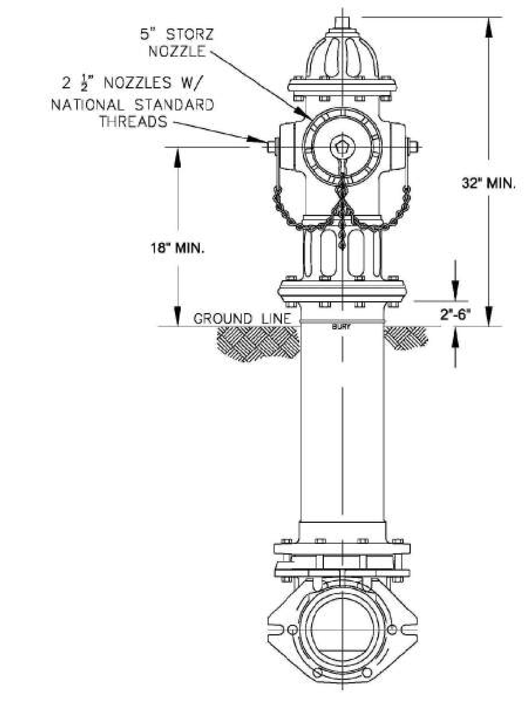

NOTES:
1. ALL PUBLIC FIRE HYDRANTS IN THE CITY OF RALEIGH AND THE MERGER TOWNS OF GARNER, ROLESVILLE, WAKE FOREST, KNIGHTDALE, WENDELL AND ZEBULON SHALL BE PAINTED CHROME YELLOW WITH HIGH REFLECTIVE ALUMINUM SILVER CAPS, BONNETS AND OPERATING NUTS.
2. ALL PRIVATE FIRE HYDRANTS SHALL BE RED.

CITY OF RALEIGH
DEPARTMENT OF PUBLIC UTILITIES
RALEIGH, GARNER, KNIGHTDALE, ROLESVILLE, WAKE FOREST, WENDELL & ZEBULON
STANDARD FIRE HYDRANT WITH 5" STORZ PUMPER NOZZLE

DWG. NO.	REVISIONS	DATE	REVISIONS	DATE
W-5	MAB	6-30-16		
	KAT	9-15-17		

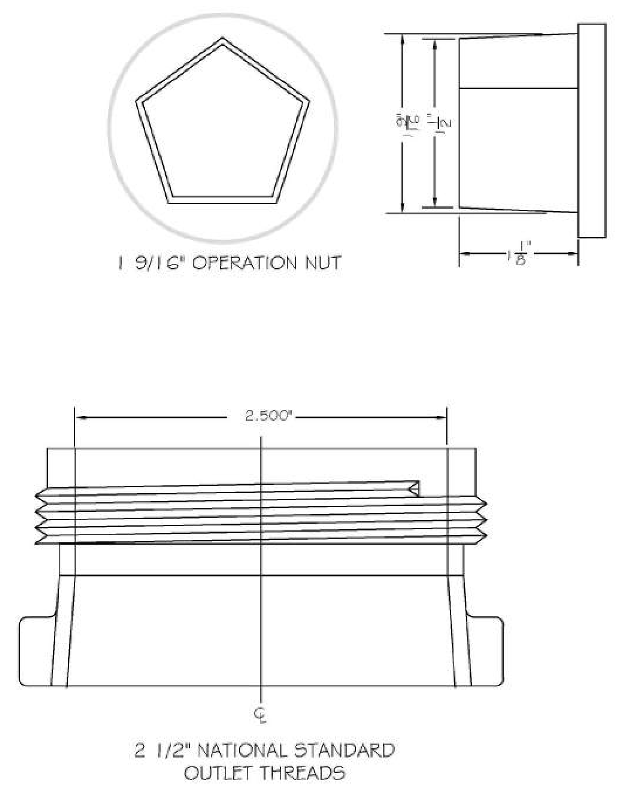

CITY OF RALEIGH
DEPARTMENT OF PUBLIC UTILITIES
HYDRANT OPERATING NUT AND 2 1/2" OUTLET THREADS

DWG. NO.	REVISIONS	DATE	REVISIONS	DATE
W-6	RRH	3-31-00	DHL	2-18-08
	A.B.B	4-13-04	J.P.S	11-1-10

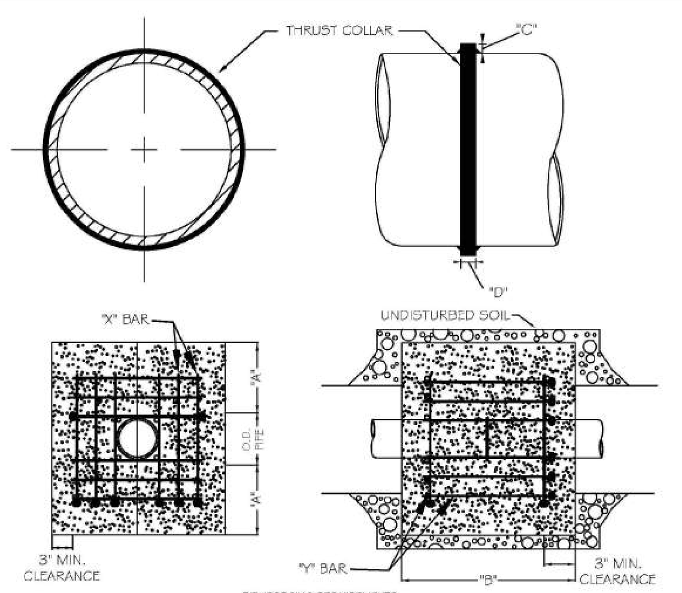

REINFORCING REQUIREMENTS

I.D. PIPE	REBAR SIZE	"X" BAR LENGTH	"X" BAR WEIGHT	"Y" BAR LENGTH	"Y" BAR WEIGHT	NO. REQUIRED
6" - 36"	#5	2'-2" + O.D. PIPE	1.043 LBS/FT	[illegible]	1.1 LBS. EACH	X-24, Y-12
48" & greater	#6	3'-0" + O.D. PIPE	1.502 LBS/FT	[illegible]	1.9 LBS. EACH	X-24, Y-12

THRUST COLLAR, AND THRUST SCHEDULE

I.D. PIPE	"A"	"B"	"C"	"D"
6" - 16"	1'-4"	1'-7"	2"	3/8"
20" - 24"	1'-4"	1'-7"	3"	1/2"
30" - 36"	1'-4"	1'-7"	4"	5/8"
48" & greater	1'-8"	1'-9"	6"	7/8"

NOTES:
1. SEE STANDARD DETAIL W-9 FOR THRUST BLOCK LOCATIONS.
2. CONCRETE SHALL BE 3000 PSI AND TRANSIT MIXED.
3. REINFORCING BARS SHALL BE DEFORMED AND TIED TOGETHER.
4. TRENCH BOTTOM WIDTH IN VICINITY OF THRUST BLOCK INSTALLATION SHALL BE THE MINIMUM WIDTH AS SHOWN ON STANDARD DETAIL W-3.
5. BACKFILL TAMPED IN 6" LIFTS PER STANDARD DETAIL W-3.
6. THRUST COLLAR MUST BE FACTORY WELDED ON BOTH SIDES ALONG BOTH EDGES OF COLLAR AROUND CIRCUMFERENCE.

CITY OF RALEIGH
DEPARTMENT OF PUBLIC UTILITIES
THRUST BLOCKING DESIGN DATA FOR WATER MAINS

DWG. NO.	REVISIONS	DATE	REVISIONS	DATE
W-7	RRH	1-21-00	J.P.S.	11-1-10
	D.H.L.	6-18-08		

REACTION BEARING AREAS FOR HORIZONTAL WATER PIPE BENDS
BASED ON TEST PRESSURE OF 200 P.S.I.
ALL AREAS GIVEN IN SQUARE FEET.

SIZE AND DEGREE OF BEND	STATIC THRUST IN POUNDS	MODERATELY DRY CLAY 4000 LBS/FT²	SOFT CLAY 2000 LBS/FT²	1600 LBS/FT² GRAVEL / COARSE SAND	8000 LBS/FT² DRY CLAY - ALWAYS DRY	SAND - COMPACT FIRM 8000 LBS/FT²	SAND - CLEAN DRY 4000 LBS/FT²	SOIL 1000 LBS/FT² QUICKSAND - VERY POOR	ROCK - POOR 10,000 LBS/FT²
6"									
11 1/4°	1,108	1	1	1	1	1	1	2	1
22 1/2°	2,207	1	2	2	1	1	1	3	1
45°	4,328	2	3	3	1	1	2	5	1
90°	7,996	2	4	5	1	1	2	8	1
PLUG	5,655	2	3	4	1	1	2	6	1
8"									
11 1/4°	1,970	1	1	2	1	1	1	2	1
22 1/2°	3,922	1	2	3	1	1	1	4	1
45°	7,694	2	4	5	1	1	2	8	1
90°	14,215	4	8	9	2	2	4	15	2
PLUG	10,053	3	5	6	2	2	3	10	1
12"									
11 1/4°	4,433	2	3	3	1	1	2	5	1
22 1/2°	8,826	3	5	6	2	2	3	9	1
45°	17,312	5	9	11	3	3	5	18	2
90°	31,983	8	16	19	4	4	8	32	4
PLUG	22,619	6	12	14	3	3	6	23	3
16"									
11 1/4°	7,881	2	4	5	1	1	2	8	1
22 1/2°	15,691	4	8	10	2	2	4	16	2
45°	30,779	8	16	19	4	4	8	31	4
90°	56,861	15	29	35	8	8	15	57	6
PLUG	40,213	10	21	25	5	5	10	41	5

REACTION BEARING AREAS ARE IN SQUARE FEET MEASURED IN A VERTICAL PLANE IN THE TRENCH SIDE AT AN ANGLE OF 90° TO THE THRUST VECTOR.

USE 6" - 90 BEND VALUE FOR HYDRANTS FOR ADDITIONAL SAFETY FACTOR.

CITY OF RALEIGH
DEPARTMENT OF PUBLIC UTILITIES
THRUST BLOCKING DESIGN QUANTITY TABLE

DWG. NO.	REVISIONS	DATE	REVISIONS	DATE
W-10	D.W.C.	6-23-99		

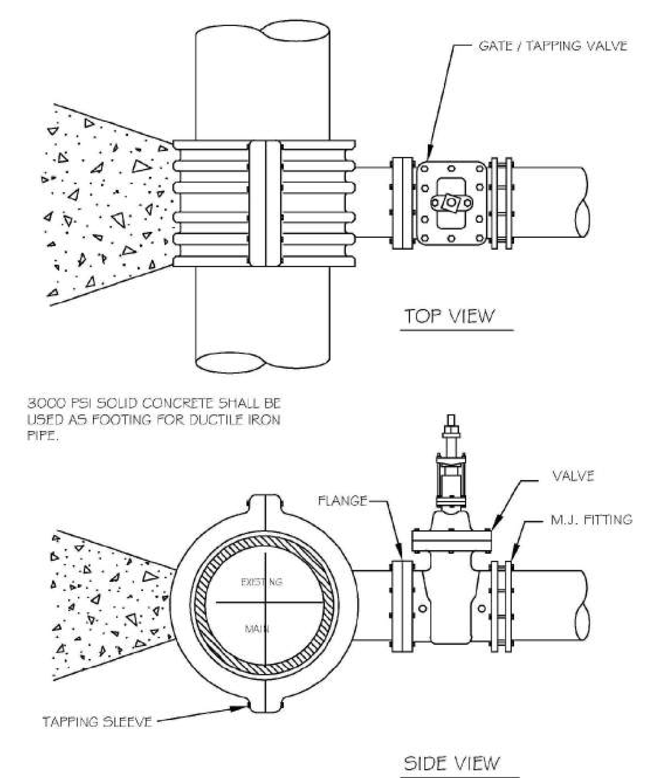

NOTES:
1. CONCRETE SHALL NOT CONTACT BOLTS OR ENDS OF MECHANICAL JOINT FITTINGS.
2. SEE STANDARD REACTION BLOCK TABLES, W-10 AND W-11 FOR AREA OF CONCRETE REQUIRED.

CITY OF RALEIGH
DEPARTMENT OF PUBLIC UTILITIES
4" - 24" STANDARD TAPPING SLEEVE AND VALVE ASSEMBLY

DWG. NO.	REVISIONS	DATE	REVISIONS	DATE
W-14	Y.C.A.	12-31-91	RRH	3-31-00
	D.W.C.	9-7-99	J.P.S.	11-1-10

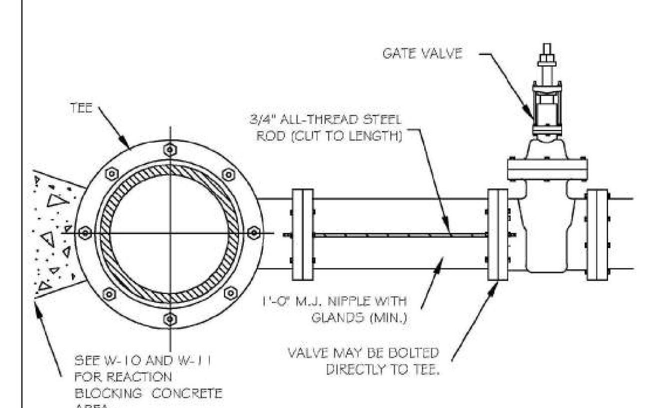

ROD REQUIREMENTS

NO. OF RODS	BRANCH SIZE
4"	2
6"	2
8"	4
12"	4
16"	6
24"	6
30"	8
36"	8

NOTES:
1. STEEL RODS AND BOLTS SHALL BE 3/4" HOT DIPPED GALVANIZED.
2. SEE STANDARD THRUST BLOCK, TABLES W-10 AND W-11 FOR CONCRETE.
3. CONCRETE SHALL NOT CONTACT BOLTS OR ENDS OF MECHANICAL FITTINGS.
4. THIS RODDING REQUIREMENT DOES NOT APPLY TO FIRE HYDRANTS.

CITY OF RALEIGH
DEPARTMENT OF PUBLIC UTILITIES
VALVE RESTRAINT AT TEES AND CROSSES FOR LINES (4"-24")

DWG. NO.	REVISIONS	DATE	REVISIONS	DATE
W-15	RRH	3-31-00	D.H.L.	6-16-08
	A.B.B.	4-19-04	J.P.S.	11-1-10

CITY OF RALEIGH – PLANS AUTHORIZED FOR CONSTRUCTION

Plans for the proposed use have been reviewed for general compliance with applicable codes. This limited review, and authorization for construction is not to be considered to represent total compliance with all legal requirements for development and construction. The property owner, design consultants, and contractors are each responsible for compliance with all applicable City, State and Federal laws. This specific authorization below is not a permit, nor shall it be construed to permit any violation of City, State or Federal Law. All Construction must be in accordance with all Local, State, and Federal Rules and Regulations.

Electronic Approval: This approval is being issued electronically. This approval is valid only upon the signature of a City of Raleigh Review Officer below. The City will retain a copy of the approved plans. Any work authorized by this approval must proceed in accordance with the plans kept on file with the City. This electronic approval may not be edited once issued. Any modification to this approval once issued will invalidate this approval.

City of Raleigh Development Approval ____________________
City of Raleigh Review Officer

Water and Sewer Permits (If applicable)

The City of Raleigh consents to the connection and extension of the City's Public Sewer System as shown on this plan. The material and Construction methods used for this project shall conform to the standards and specifications of the City's Public Utilities Handbook. City of Raleigh Public Utilities Department Permit # S-5378

The City of Raleigh consents to the connection and extension of the City's Public Water System as shown on this plan. The material and Construction methods used for this project shall conform to the standards and specifications of the City's Public Utilities Handbook. City of Raleigh Public Utilities Department Permit # W-4073

The City of Raleigh consents to the connection to its public sewer system and extension of the private sewer collection system as shown on this plan. The material and constructions methods used for this project shall conform to the standards and specifications of the City's Public Utilities Handbook.
City of Raleigh Public Utilities Department Permit # ____________________

Town Certification. This design has been reviewed by the Engineer for the Town of Knightdale, and to the best of my knowledge and belief, it conforms to the requirements established in the Standard Specifications of the Town of Knightdale.
By: ________________ Date: ____________
Town Engineer
These plans are approved by the Town of Knightdale and serve as construction plans for this project.
By: ________________ Date: ____________
Administrator

FINAL DRAWING - RELEASED FOR CONSTRUCTION

MCADAMS
The John R. McAdams Company, Inc.
2905 Meridian Parkway
Durham, NC 27713

phone 919. 361. 5000
fax 919. 361. 2269
license number: C-0293, C-187

www.mcadamsco.com

CLIENT

ALLIANCE GROUP OF NC, LLC
7208 FALLS OF NEUSE RD, SUITE 101
RALEIGH, NORTH CAROLINA 27615
JACOB ANDERSON
PHONE: 919. 239. 9486

AGNC
BROKERAGE | CONSULTING | PLANNING

DOWNTOWN NORTH AT KNIGHTDALE STATION
CONSTRUCTION DRAWINGS
N SMITHFIELD ROAD
KNIGHTDALE, NORTH CAROLINA

NORTH CAROLINA PROFESSIONAL SEAL 051536 ENGINEER TYLER E. PROBST

REVISIONS

NO.	DATE	
1	----	----
2	----	----
3	----	----
4	----	----
5	----	----
6	----	----

PLAN INFORMATION

PROJECT NO.	AGN-21002
FILENAME	AGN21002-D1
CHECKED BY	TEP
DRAWN BY	RJF
SCALE	N/A
DATE	02. 16. 2024

SHEET

WATER DETAILS

C8.03

M:\Projects\AGN\AGN21002\04-Production\Engineering\Current Drawings\Construction Drawings Sets\Phase-1\AGN21002-D1.dwg, 2/16/2024 2:29:09 PM, John Martin

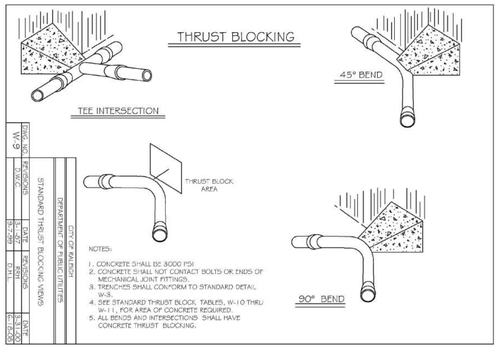

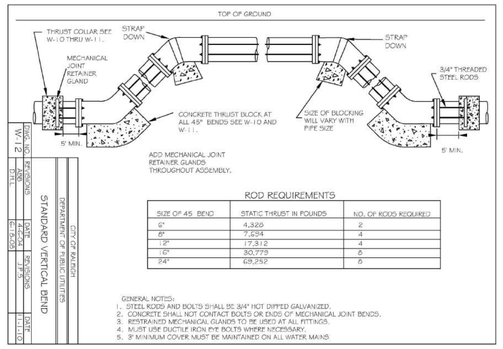

SIZE OF 45° BEND	STATIC THRUST IN POUNDS	NO. OF RODS REQUIRED
6"	4,326	2
8"	7,694	4
12"	17,312	4
16"	30,779	6
24"	69,252	8

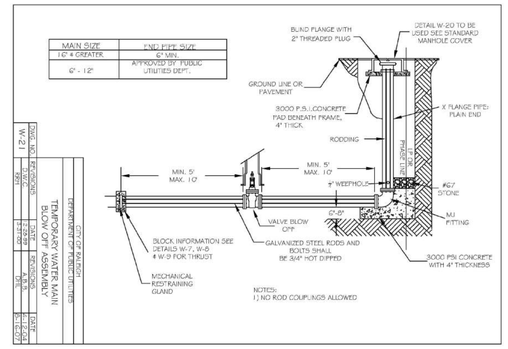

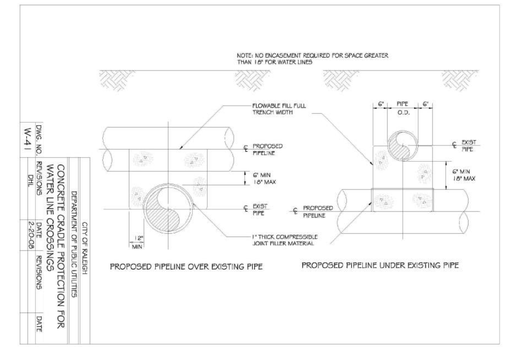

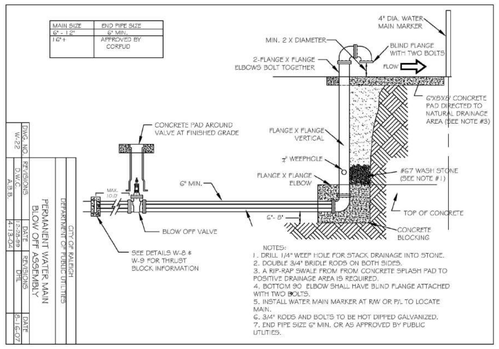

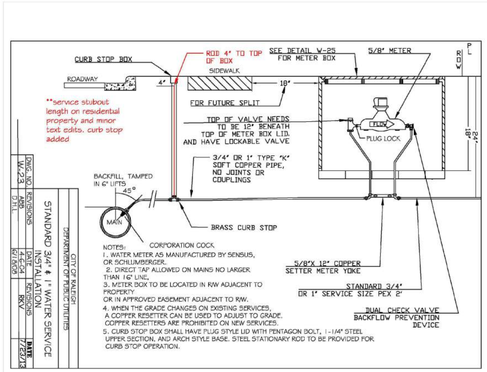

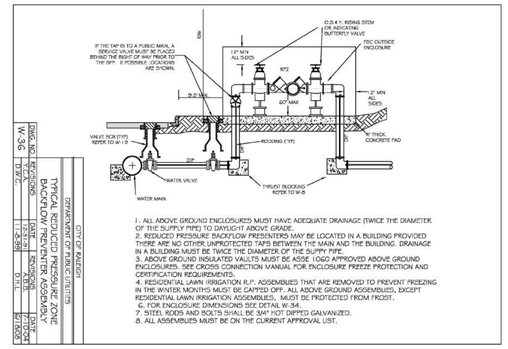

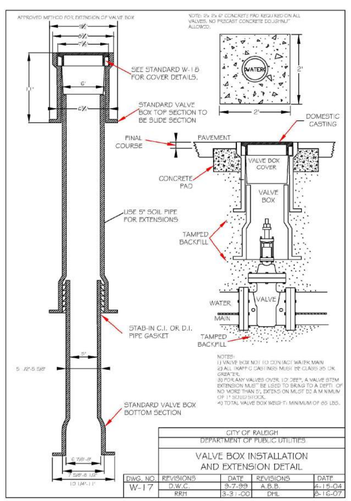

DWG. NO.	REVISIONS	DATE	REVISIONS	DATE
W-17	D.W.C.	9-7-95	A.B.B.	6-15-04
	KRH	3-3-00	DHL	9-16-07

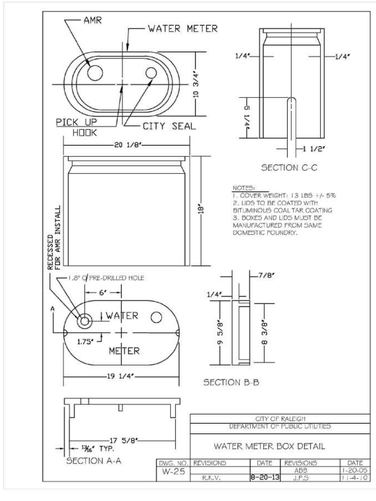

DWG. NO.	REVISIONS	DATE	REVISIONS	DATE
W-25			ADD	1-20-00
	K.E.V.	8-20-13	J.P.D.	11-4-10

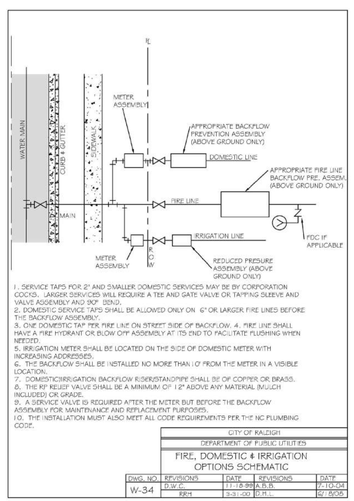

DWG. NO.	REVISIONS	DATE	REVISIONS	DATE
W-34	D.W.C.	11-18-99	A.B.B.	7-10-04
	KRH	3-31-00	D.H.L.	10/ 8/08

CITY OF RALEIGH – PLANS AUTHORIZED FOR CONSTRUCTION

Plans for the proposed use have been reviewed for general compliance with applicable codes. This limited review, and authorization for construction is not to be considered to represent total compliance with all legal requirements for development and construction. The property owner, design consultants, and contractors are each responsible for compliance with all applicable City, State and Federal laws. This specific authorization below is not a permit, nor shall it be construed to permit any violation of City, State or Federal Law. All Construction must be in accordance with all Local, State, and Federal Rules and Regulations.

Electronic Approval: This approval is being issued electronically. This approval is valid only upon the signature of a City of Raleigh Review Officer below. The City will retain a copy of the approved plans. Any work authorized by this approval must proceed in accordance with the plans kept on file with the City. This electronic approval may not be edited once issued. Any modification to this approval once issued will invalidate this approval.

City of Raleigh Development Approval _____

City of Raleigh Review Officer

Water and Sewer Permits (If applicable)

The City of Raleigh consents to the connection and extension of the City's Public Sewer System as shown on this plan. The material and Construction methods used for this project shall conform to the standards and specifications of the City's Public Utilities Handbook. City of Raleigh Public Utilities Department Permit # S-5378

The City of Raleigh consents to the connection and extension of the City's Public Water System as shown on this plan. The material and Construction methods used for this project shall conform to the standards and specifications of the City's Public Utilities Handbook. City of Raleigh Public Utilities Department Permit # W-4073

The City of Raleigh consents to the connection to its public sewer system and extension of the private sewer collection system as shown on this plan. The material and constructions methods used for this project shall conform to the standards and specifications of the City's Public Utilities Handbook.
City of Raleigh Public Utilities Department Permit # _____

Town Certification. This design has been reviewed by the Engineer for the Town of Knightdale, and to the best of my knowledge and belief, it conforms to the requirements established in the Standard Specifications of the Town of Knightdale.
By: _____ Date: _____
Town Engineer
These plans are approved by the Town of Knightdale and serve as construction plans for this project.
By: _____ Date: _____
Administrator

FINAL DRAWING - RELEASED FOR CONSTRUCTION

MCADAMS
The John R. McAdams Company, Inc.
2905 Meridian Parkway
Durham, NC 27713

phone 919. 361. 5000
fax 919. 361. 2269
license number: C-0293, C-187

www.mcadamsco.com

CLIENT

ALLIANCE GROUP OF NC, LLC
7208 FALLS OF NEUSE RD, SUITE 101
RALEIGH, NORTH CAROLINA 27615
JACOB ANDERSON
PHONE: 919. 239. 9486

AGNC

DOWNTOWN NORTH AT KNIGHTDALE STATION
CONSTRUCTION DRAWINGS
N SMITHFIELD ROAD
KNIGHTDALE, NORTH CAROLINA

NORTH CAROLINA PROFESSIONAL SEAL 051536 ENGINEER TYLER E. PROBST

REVISIONS

NO.	DATE	
1	----	----
2	----	----
3	----	----
4	----	----
5	----	----
6	----	----

PLAN INFORMATION

PROJECT NO.	AGN-21002
FILENAME	AGN21002-D1
CHECKED BY	TEP
DRAWN BY	RJF
SCALE	N/A
DATE	02. 16. 2024

SHEET

WATER DETAILS

C8.04

M:\Projects\AGN\AGN21002\04-Production\Engineering\Current Drawings\Construction Drawings Sets\Phase-1\AGN21002-D1.dwg, 2/16/2024 2:29:14 PM, John Martin

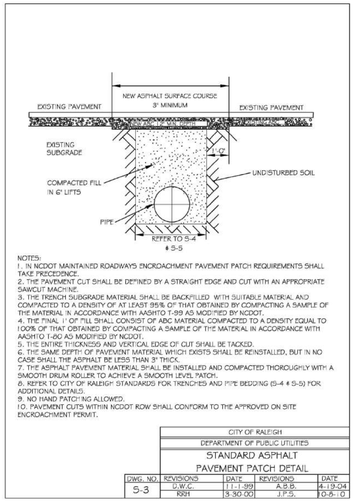

NOTES:
1. IN NCDOT MAINTAINED ROADWAYS ENCROACHMENT PAVEMENT PATCH REQUIREMENTS SHALL TAKE PRECEDENCE.
2. THE PAVEMENT CUT SHALL BE DEFINED BY A STRAIGHT EDGE AND CUT WITH AN APPROPRIATE SAWCUT MACHINE.
3. THE TRENCH SUBGRADE MATERIAL SHALL BE BACKFILLED WITH SUITABLE MATERIAL AND COMPACTED TO A DENSITY OF AT LEAST 95% OF THAT OBTAINED BY COMPACTING A SAMPLE OF THE MATERIAL IN ACCORDANCE WITH AASHTO T-99 AS MODIFIED BY NCDOT.
4. THE FINAL 1' OF FILL SHALL CONSIST OF ABC MATERIAL COMPACTED TO A DENSITY EQUAL TO 100% OF THAT OBTAINED BY COMPACTING A SAMPLE OF THE MATERIAL IN ACCORDANCE WITH AASHTO T-180 AS MODIFIED BY NCDOT.
5. THE ENTIRE THICKNESS AND VERTICAL EDGE OF CUT SHALL BE TACKED.
6. THE SAME DEPTH OF PAVEMENT MATERIAL WHICH EXISTS SHALL BE REINSTALLED, BUT IN NO CASE SHALL THE ASPHALT BE LESS THAN 3" THICK.
7. THE ASPHALT PAVEMENT MATERIAL SHALL BE INSTALLED AND COMPACTED THOROUGHLY WITH A SMOOTH DRUM ROLLER TO ACHIEVE A SMOOTH LEVEL PATCH.
8. REFER TO CITY OF RALEIGH STANDARDS FOR TRENCHES AND PIPE BEDDING (S-4 & S-5) FOR ADDITIONAL DETAILS.
9. NO HAND PATCHING ALLOWED.
10. PAVEMENT CUTS WITHIN NCDOT ROW SHALL CONFORM TO THE APPROVED ON SITE ENCROACHMENT PERMIT.

CITY OF RALEIGH
DEPARTMENT OF PUBLIC UTILITIES
STANDARD ASPHALT PAVEMENT PATCH DETAIL

DWG. NO.	REVISIONS	DATE	REVISIONS	DATE
S-3	D.W.C.	11-1-99	A.B.B.	4-19-04
	RRH	3-30-00	J.P.S.	10-5-10

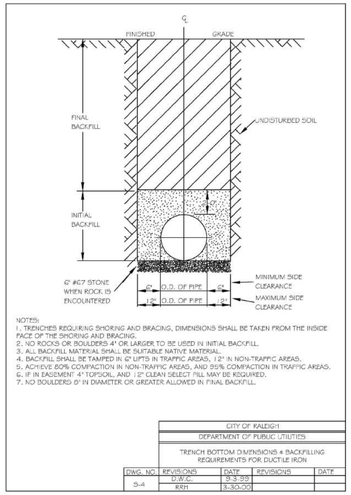

NOTES:
1. TRENCHES REQUIRING SHORING AND BRACING, DIMENSIONS SHALL BE TAKEN FROM THE INSIDE FACE OF THE SHORING AND BRACING.
2. NO ROCKS OR BOULDERS 4" OR LARGER TO BE USED IN INITIAL BACKFILL.
3. ALL BACKFILL MATERIAL SHALL BE SUITABLE NATIVE MATERIAL.
4. BACKFILL SHALL BE TAMPED IN 6" LIFTS IN TRAFFIC AREAS, 12" IN NON-TRAFFIC AREAS.
5. ACHIEVE 85% COMPACTION IN NON-TRAFFIC AREAS, AND 95% COMPACTION IN TRAFFIC AREAS.
6. IF IN EASEMENT 4" TOPSOIL AND 12" CLEAN SELECT FILL MAY BE REQUIRED.
7. NO BOULDERS 6" IN DIAMETER OR GREATER ALLOWED IN FINAL BACKFILL.

CITY OF RALEIGH
DEPARTMENT OF PUBLIC UTILITIES
TRENCH BOTTOM DIMENSIONS & BACKFILLING REQUIREMENTS FOR DUCTILE IRON

DWG. NO.	REVISIONS	DATE	REVISIONS	DATE
S-4	D.W.C.	9-3-99		
	RRH	3-30-00		

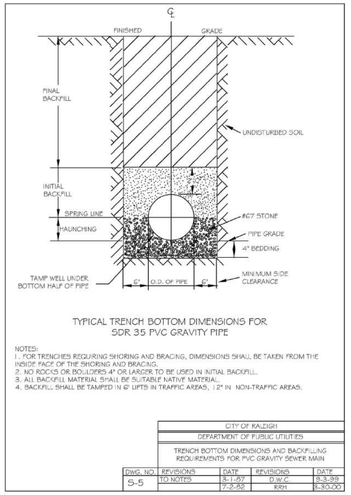

TYPICAL TRENCH BOTTOM DIMENSIONS FOR SDR 35 PVC GRAVITY PIPE

NOTES:
1. FOR TRENCHES REQUIRING SHORING AND BRACING, DIMENSIONS SHALL BE TAKEN FROM THE INSIDE FACE OF THE SHORING AND BRACING.
2. NO ROCKS OR BOULDERS 4" OR LARGER TO BE USED IN INITIAL BACKFILL.
3. ALL BACKFILL MATERIAL SHALL BE SUITABLE NATIVE MATERIAL.
4. BACKFILL SHALL BE TAMPED IN 6" LIFTS IN TRAFFIC AREAS, 12" IN NON-TRAFFIC AREAS.

CITY OF RALEIGH
DEPARTMENT OF PUBLIC UTILITIES
TRENCH BOTTOM DIMENSIONS AND BACKFILLING REQUIREMENTS FOR PVC GRAVITY SEWER MAIN

DWG. NO.	REVISIONS	DATE	REVISIONS	DATE
S-5	TO NOTES	8-1-97	D.W.C.	9-3-99
		7-2-98	RRH	3-30-00

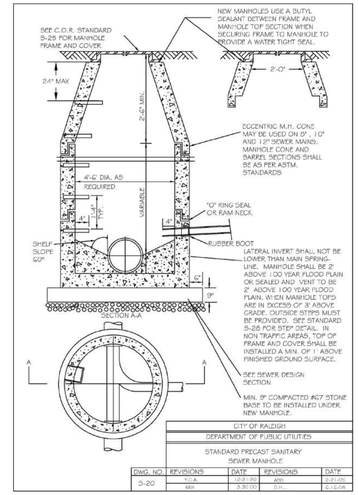

CITY OF RALEIGH
DEPARTMENT OF PUBLIC UTILITIES
STANDARD PRECAST SANITARY SEWER MANHOLE

DWG. NO.	REVISIONS	DATE	REVISIONS	DATE
S-20	A.A.	12-1-98	ABB	5-2-04
	RRH	3-30-00	DHL	1-28-08

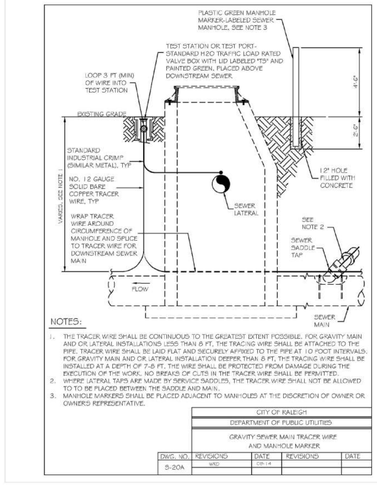

NOTES:
1. THE TRACER WIRE SHALL BE CONTINUOUS TO THE GREATEST EXTENT POSSIBLE. FOR GRAVITY MAIN AND OR LATERAL INSTALLATIONS LESS THAN 8 FT, THE TRACING WIRE SHALL BE ATTACHED TO THE PIPE. TRACER WIRE SHALL BE LAID FLAT AND SECURELY AFFIXED TO THE PIPE AT 10 FOOT INTERVALS. FOR GRAVITY MAIN AND OR LATERAL INSTALLATION DEEPER THAN 8 FT, THE TRACING WIRE SHALL BE INSTALLED AT A DEPTH OF 7±8 FT. THE WIRE SHALL BE PROTECTED FROM DAMAGE DURING THE EVECUTION OF THE WORK. NO BREAKS OF CUTS IN THE TRACER WIRE SHALL BE PERMITTED.
2. WHERE LATERAL TAPS ARE MADE BY DIRECT SADDLES, THE TRACER WIRE SHALL NOT BE ALLOWED TO TO BE PLACED BETWEEN THE SADDLE AND MAIN.
3. MANHOLE MARKERS SHALL BE PLACED ADJACENT TO MANHOLES AT THE DISCRETION OF OWNER OR OWNERS REPRESENTATIVE.

CITY OF RALEIGH
DEPARTMENT OF PUBLIC UTILITIES
GRAVITY SEWER MAIN TRACER WIRE AND MANHOLE MARKER

DWG. NO.	REVISIONS	DATE	REVISIONS	DATE
S-20A	WRD	10-1-14		

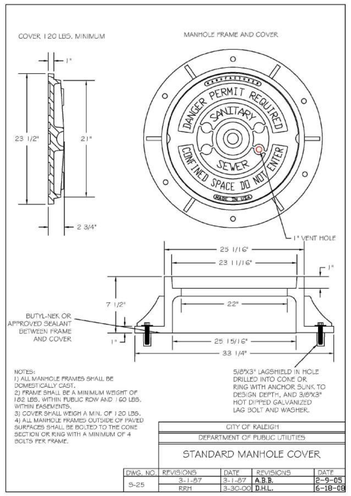

NOTES:
1) ALL MANHOLE FRAMES SHALL BE DOMESTICALLY CAST.
2) FRAME SHALL BE A MINIMUM WEIGHT OF 162 LBS. WITHIN PUBLIC ROW AND 120 LBS. WITHIN EASEMENTS.
3) COVER SHALL WEIGH A MIN. OF 120 LBS.
4) ALL MANHOLE FRAMES OUTSIDE OF PAVED SURFACES SHALL BE ROUTED TO THE CONE SECTION OR RING WITH A MINIMUM OF 4 BOLTS PER FRAME.

5/8"X3" LAGSHIELD IN HOLE DRILLED INTO CONE OR RING WITH ANCHOR SLIVE TO DESIGN DEPTH, AND 3/8"X3" HOT DIPPED GALVANIZED LAG BOLT AND WASHER.

CITY OF RALEIGH
DEPARTMENT OF PUBLIC UTILITIES
STANDARD MANHOLE COVER

DWG. NO.	REVISIONS	DATE	REVISIONS	DATE
S-25	3-1-97	3-1-97	A.B.B.	2-9-05
	RRH	3-30-00	D.H.L.	6-18-08

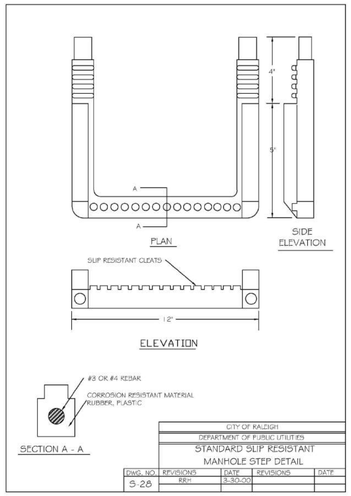

CITY OF RALEIGH
DEPARTMENT OF PUBLIC UTILITIES
STANDARD SLIP RESISTANT MANHOLE STEP DETAIL

DWG. NO.	REVISIONS	DATE	REVISIONS	DATE
S-26	RRH	3-30-00		

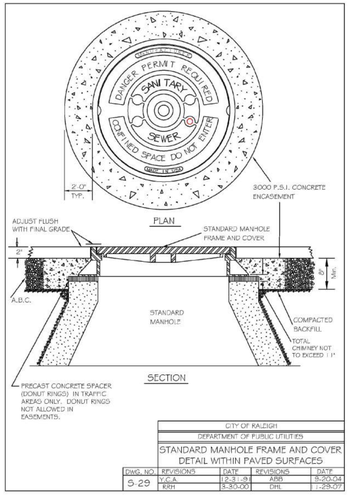

CITY OF RALEIGH
DEPARTMENT OF PUBLIC UTILITIES
STANDARD MANHOLE FRAME AND COVER DETAIL WITHIN PAVED SURFACES

DWG. NO.	REVISIONS	DATE	REVISIONS	DATE
S-29	V.C.A.	12-31-98	ABB	5-20-04
	RRH	3-30-00	DHL	1-29-07

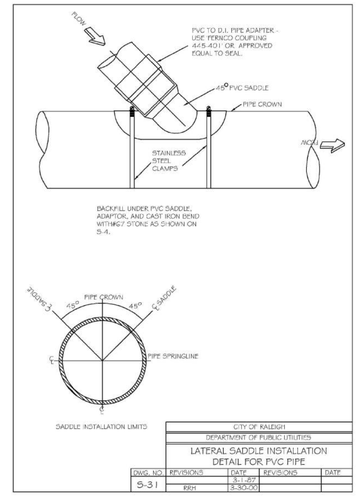

CITY OF RALEIGH
DEPARTMENT OF PUBLIC UTILITIES
LATERAL SADDLE INSTALLATION DETAIL FOR PVC PIPE

DWG. NO.	REVISIONS	DATE	REVISIONS	DATE
S-31		3-1-97		
	RRH	3-30-00		

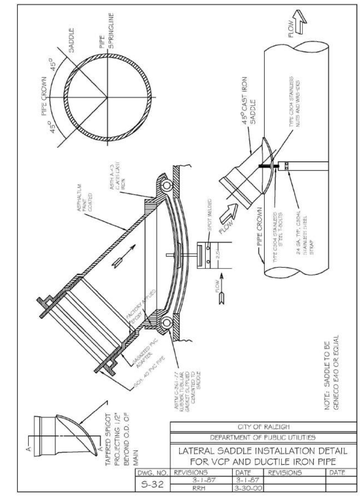

CITY OF RALEIGH
DEPARTMENT OF PUBLIC UTILITIES
LATERAL SADDLE INSTALLATION DETAIL FOR VCP AND DUCTILE IRON PIPE

DWG. NO.	REVISIONS	DATE	REVISIONS	DATE
S-32	3-1-97	3-1-97		
	RRH	3-30-00		

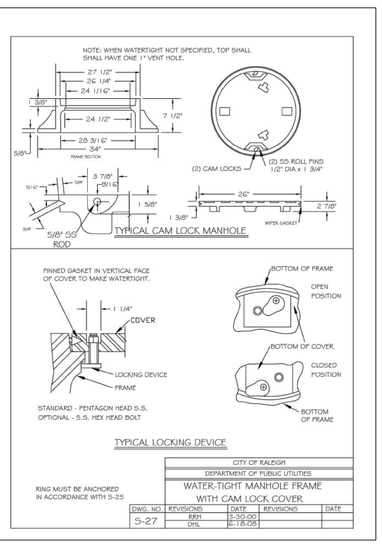

RING MUST BE ANCHORED IN ACCORDANCE WITH S-25

CITY OF RALEIGH
DEPARTMENT OF PUBLIC UTILITIES
WATER-TIGHT MANHOLE FRAME WITH CAM LOCK COVER

DWG. NO.	REVISIONS	DATE	REVISIONS	DATE
S-27	RRH	3-30-00		
	DHL	6-18-08		

CITY OF RALEIGH – PLANS AUTHORIZED FOR CONSTRUCTION

Plans for the proposed use have been reviewed for general compliance with applicable codes. This limited review, and authorization for construction is not to be considered to represent total compliance with all legal requirements for development and construction. The property owner, design consultants, and contractors are each responsible for compliance with all applicable City, State and Federal laws. This specific authorization below is not a permit, nor shall it be construed to permit any violation of City, State or Federal Law. All Construction must be in accordance with all Local, State, and Federal Rules and Regulations.

Electronic Approval: This approval is being issued electronically. This approval is valid only upon the signature of a City of Raleigh Review Officer below. The City will retain a copy of the approved plans. Any work authorized by this approval must proceed in accordance with the plans kept on file with the City. This electronic approval may not be edited once issued. Any modification to this approval once issued will invalidate this approval.

City of Raleigh Development Approval _____
City of Raleigh Review Officer

Water and Sewer Permits (If applicable)

The City of Raleigh consents to the connection and extension of the City's Public Sewer System as shown on this plan. The material and Construction methods used for this project shall conform to the standards and specifications of the City's Public Utilities Handbook. City of Raleigh Public Utilities Department Permit # S-5378

The City of Raleigh consents to the connection and extension of the City's Public Water System as shown on this plan. The material and Construction methods used for this project shall conform to the standards and specifications of the City's Public Utilities Handbook. City of Raleigh Public Utilities Department Permit # W-4073

The City of Raleigh consents to the connection to its public sewer system and extension of the private sewer collection system as shown on this plan. The material and constructions methods used for this project shall conform to the standards and specifications of the City's Public Utilities Handbook.
City of Raleigh Public Utilities Department Permit # _____

Town Certification. This design has been reviewed by the Engineer for the Town of Knightdale, and to the best of my knowledge and belief, it conforms to the requirements established in the Standard Specifications of the Town of Knightdale.
By: _____ Date: _____
Town Engineer
These plans are approved by the Town of Knightdale and serve as construction plans for this project.
By: _____ Date: _____
Administrator

FINAL DRAWING - RELEASED FOR CONSTRUCTION

MCADAMS
The John R. McAdams Company, Inc.
2905 Meridian Parkway
Durham, NC 27713

phone 919. 361. 5000
fax 919. 361. 2269
license number: C-0293, C-187

www.mcadamsco.com

CLIENT

ALLIANCE GROUP OF NC, LLC
7208 FALLS OF NEUSE RD, SUITE 101
RALEIGH, NORTH CAROLINA 27615
JACOB ANDERSON
PHONE: 919. 239. 9486

AGNC

DOWNTOWN NORTH AT KNIGHTDALE STATION
CONSTRUCTION DRAWINGS
N SMITHFIELD ROAD
KNIGHTDALE, NORTH CAROLINA

NORTH CAROLINA PROFESSIONAL SEAL 051536 ENGINEER TYLER E. PROBST

REVISIONS

NO.	DATE	
1	----	----
2	----	----
3	----	----
4	----	----
5	----	----
6	----	----

PLAN INFORMATION

PROJECT NO.	AGN-21002
FILENAME	AGN21002-D1
CHECKED BY	TEP
DRAWN BY	RJF
SCALE	N/A
DATE	02. 16. 2024

SHEET

SANITARY SEWER DETAILS

C8.05

M:\Projects\AGN\AGN21002\04-Production\Engineering\Current Drawings\Construction Drawings Sets\Phase-1\AGN21002-D1.dwg, 2/16/2024 2:29:19 PM, John Martin

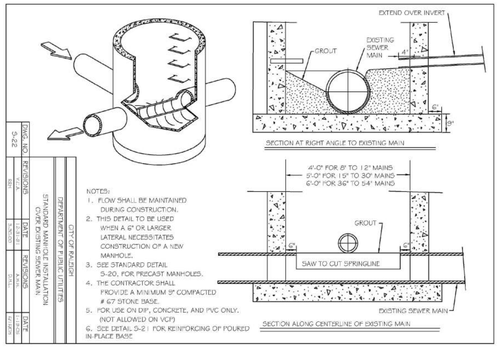

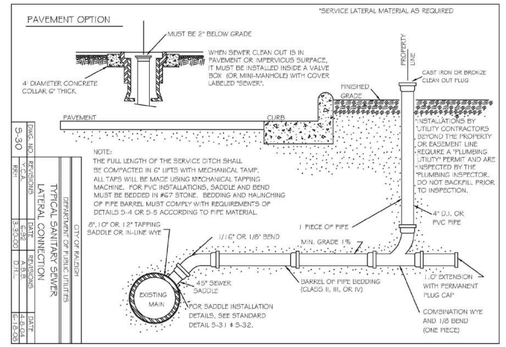

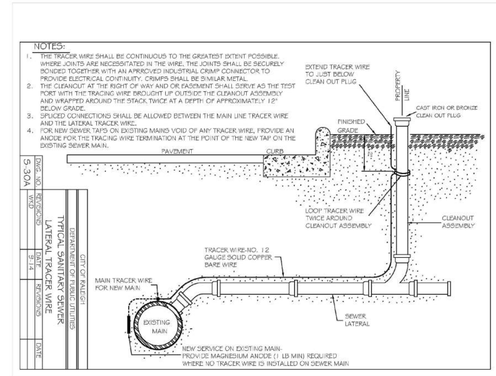

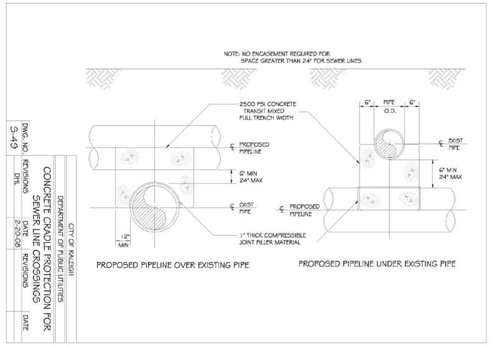

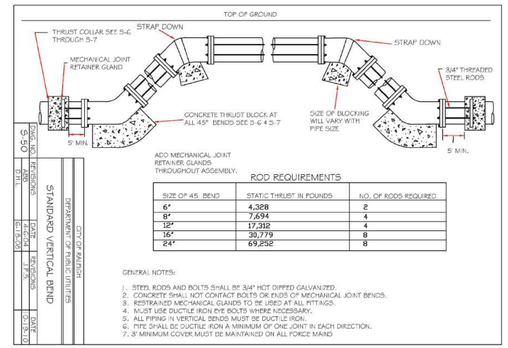

SIZE OF 45° BEND	STATIC THRUST IN POUNDS	NO. OF RODS REQUIRED
6"	4,328	2
8"	7,694	4
12"	17,312	4
16"	30,779	8
24"	69,252	8

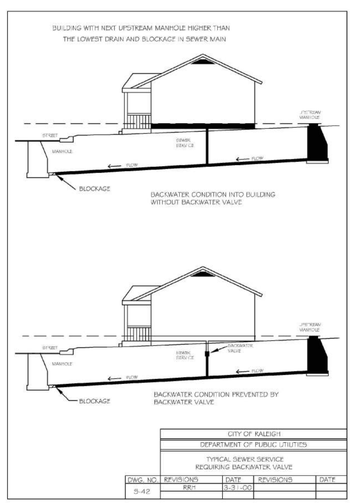

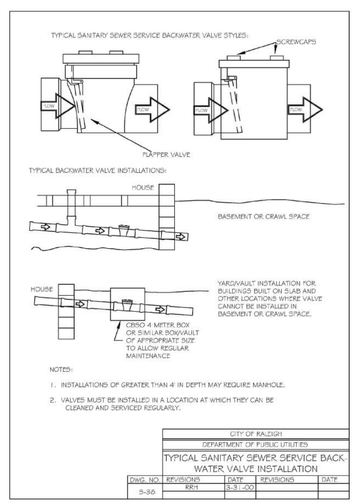

CITY OF RALEIGH – PLANS AUTHORIZED FOR CONSTRUCTION

Plans for the proposed use have been reviewed for general compliance with applicable codes. This limited review, and authorization for construction is not to be considered to represent total compliance with all legal requirements for development and construction. The property owner, design consultants, and contractors are each responsible for compliance with all applicable City, State and Federal laws. This specific authorization below is not a permit, nor shall it be construed to permit any violation of City, State or Federal Law. All Construction must be in accordance with all Local, State, and Federal Rules and Regulations.

Electronic Approval: This approval is being issued electronically. This approval is valid only upon the signature of a City of Raleigh Review Officer below. The City will retain a copy of the approved plans. Any work authorized by this approval must proceed in accordance with the plans kept on file with the City. This electronic approval may not be edited once issued. Any modification to this approval once issued will invalidate this approval.

City of Raleigh Development Approval _____
City of Raleigh Review Officer

Water and Sewer Permits (If applicable)

The City of Raleigh consents to the connection and extension of the City's Public Sewer System as shown on this plan. The material and Construction methods used for this project shall conform to the standards and specifications of the City's Public Utilities Handbook. City of Raleigh Public Utilities Department Permit # S-5378

The City of Raleigh consents to the connection and extension of the City's Public Water System as shown on this plan. The material and Construction methods used for this project shall conform to the standards and specifications of the City's Public Utilities Handbook. City of Raleigh Public Utilities Department Permit # W-4073

The City of Raleigh consents to the connection to its public sewer system and extension of the private sewer collection system as shown on this plan. The material and constructions methods used for this project shall conform to the standards and specifications of the City's Public Utilities Handbook.
City of Raleigh Public Utilities Department Permit # _____

Town Certification. This design has been reviewed by the Engineer for the Town of Knightdale, and to the best of my knowledge and belief, it conforms to the requirements established in the Standard Specifications of the Town of Knightdale.
By: _____ Date: _____
Town Engineer
These plans are approved by the Town of Knightdale and serve as construction plans for this project.
By: _____ Date: _____
Administrator

FINAL DRAWING - RELEASED FOR CONSTRUCTION

MCADAMS
The John R. McAdams Company, Inc.
2905 Meridian Parkway
Durham, NC 27713

phone 919. 361. 5000
fax 919. 361. 2269
license number: C-0293, C-187

www.mcadamsco.com

CLIENT

ALLIANCE GROUP OF NC, LLC
7208 FALLS OF NEUSE RD, SUITE 101
RALEIGH, NORTH CAROLINA 27615
JACOB ANDERSON
PHONE: 919. 239. 9486

AGNC

DOWNTOWN NORTH AT KNIGHTDALE STATION
CONSTRUCTION DRAWINGS
N SMITHFIELD ROAD
KNIGHTDALE, NORTH CAROLINA

NORTH CAROLINA PROFESSIONAL SEAL 051536 ENGINEER TYLER E. PROEST

REVISIONS

NO.	DATE	
1	----	----
2	----	----
3	----	----
4	----	----
5	----	----
6	----	----

PLAN INFORMATION

PROJECT NO.	AGN-21002
FILENAME	AGN21002-D1
CHECKED BY	TEP
DRAWN BY	RJF
SCALE	N/A
DATE	02. 16. 2024

SHEET

SANITARY SEWER DETAILS

C8.06

M:\Projects\AGN\AGN21002\04-Production\Engineering\Current Drawings\Construction Drawings Sets\Phase-1\AGN21002-D1.dwg, 2/16/2024 2:29:25 PM, John Martin

STORMWATER CONTROL MEASURE 'A' CONSTRUCTION SPECIFICATIONS

GENERAL NOTES

1. PRIOR TO CONSTRUCTION, ANY DISCREPANCIES IN THE PLANS AND NOTES SHALL BE BROUGHT TO THE DESIGN ENGINEER'S ATTENTION IMMEDIATELY.

2. THE PROJECT WILL MEET ALL OF THE REQUIREMENTS RELATIVE TO BEST MANAGEMENT PRACTICES AND ENGINEERED STORMWATER CONTROL STRUCTURES AS OUTLINED IN THE TOWN OF KNIGHTDALE LAND DEVELOPMENT ORDINANCE. (CHAPTER 9, PART 4, UDO)

3. THE FINAL CERTIFICATION FOR THIS FACILITY WILL INCLUDE A CERTIFICATION BY THE ON-SITE GEOTECHNICAL ENGINEER THAT THE PROJECT WAS CONSTRUCTED PER THE APPROVED PLANS. IT IS THE RESPONSIBILITY OF THE CONTRACTOR TO COORDINATE WITH THE ON-SITE GEOTECHNICAL ENGINEER FOR OBSERVATION AND TESTING SUCH THAT THE ON-SITE GEOTECHNICAL ENGINEER CAN CERTIFY THE CONSTRUCTION OF THE DAM EMBANKMENT AND SPILLWAY. THIS CERTIFICATION MUST ADDRESS THE TESTING FOR MATERIALS AND COMPACTION OF THE DAM EMBANKMENT AND SPILLWAY.

4. ALL CONSTRUCTION ACTIVITY RELATED TO THE PROPOSED STORMWATER CONTROL MEASURE SHALL BE PER THE DETAILS AND SPECIFICATIONS SHOWN IN THESE DRAWINGS. SOILS, COMPACTION, AND OTHER MISCELLANEOUS DETAILS AND SPECIFICATIONS MAY BE MODIFIED PER THE RECOMMENDATIONS OF THE ON-SITE GEOTECHNICAL ENGINEER. HOWEVER, PRIOR TO IMPLEMENTATION, THE DESIGN ENGINEER SHALL BE NOTIFIED OF ANY DEVIATION FROM THESE DESIGN DRAWINGS, INCLUDING SHOP DRAWINGS FOR ANY PROPOSED MODIFICATION.

5. DURING THE INITIAL STAGES OF CONSTRUCTION, THE STORMWATER CONTROL MEASURE MAY BE USED AS A SEDIMENT BASIN FOR EROSION CONTROL PURPOSES. IF SO, THE CONTRACTOR SHALL FOLLOW THE GENERAL CONSTRUCTION SEQUENCE BELOW:
   A. THE CONTRACTOR SHALL CONSTRUCT THE ENTIRE FACILITY (PERMANENT OUTLET STRUCTURE, DAM, ETC.) WITH THE EXCEPTION OF THE INTERIOR FINE GRADING FOR THE FACILITY. THE INTERIOR FINE GRADING WILL BE CONSTRUCTED ONCE THE EROSION CONTROL PHASE IS COMPLETE.
   B. THE TEMPORARY DRAW DOWN RISER (OR SKIMMER) SHALL BE CONNECTED TO THE PERMANENT 6"Ø DIP DRAIN PIPE.
   C. ONCE THE UPSTREAM DRAINAGE AREA IS STABILIZED AND THE EROSION CONTROL INSPECTOR APPROVES THE REMOVAL OF THE SEDIMENT BASIN (SEE REQUIRED TOWN OF KNIGHTDALE SCM BASIN REMOVAL SEQUENCE BELOW NOTE 13.1-13.5), THE CONTRACTOR SHALL REMOVE THE TEMPORARY DRAW DOWN RISER (OR SKIMMER) AND CLEAN OUT THE BASIN. ALL SEDIMENT, TRASH, ETC. SHALL BE DISPOSED OF PROPERLY (I.E. - PLACED IN A LANDFILL) AND NOT STOCKPILED IN AN AREA WHERE WATER QUALITY COULD BE ADVERSELY AFFECTED.
   D. ONCE THE BASIN IS CLEANED OUT, AND ALL EROSION CONTROL DEVICES REMOVED, THE CONTRACTOR SHALL CONSTRUCT THE INTERIOR GRADING SHOWN ON THIS SHEET.
   E. ONCE THE GRADING IS COMPLETE, THE CONTRACTOR SHALL REQUEST AN ON-SITE INSPECTION AND AN AS-BUILT SURVEY PRIOR TO INSTALLATION OF THE STORMWATER CONTROL MEASURE PLANTS. IF THE CONTRACTOR PLANTS THE PROPOSED VEGETATION PRIOR TO AN AS-BUILT SURVEY (AND SUBSEQUENT APPROVAL), ANY CHANGES TO THE GRADING / RE-PLANTING OF PLANTS WILL BE AT THE CONTRACTOR'S EXPENSE.
   F. ONCE THE ENGINEER HAS APPROVED THE AS-BUILT GRADING, THE CONTRACTOR SHALL PLANT THE PROPOSED STORMWATER CONTROL MEASURE PLANTS SHOWN ON THE LANDSCAPE PLAN FOR THE FACILITY. AFTER COMPLETION OF THE PLANTING, THE LANDSCAPE CONTRACTOR SHALL PROVIDE A LETTER TO THE ENGINEER CERTIFYING THAT THE PLANTS HAVE BEEN INSTALLED PER THE APPROVED STORMWATER CONTROL MEASURE PLANTING PLAN.

6. ALL OSHA REQUIREMENTS FOR EXCAVATIONS (SHORING, DEPTH, ETC.) ARE THE RESPONSIBILITY OF THE CONTRACTOR. IF REQUIRED, THE CONTRACTOR SHALL PROVIDE AN EXCAVATION PLAN TO BE SEALED BY A NC P.E. IT IS THE RESPONSIBILITY OF THE CONTRACTOR TO DETERMINE IF AN EXCAVATION PLAN IS REQUIRED. THE JOHN R. MCADAMS COMPANY ASSUMES NO RESPONSIBILITY FOR ANY EXCAVATION DESIGN RELATED TO SAFETY OR OSHA REQUIREMENTS.

7. ON-SITE GEOTECHNICAL ENGINEER TO DETERMINE IF IN-SITU SOILS ENCOUNTERED WOULD MAINTAIN A STORMWATER CONTROL MEASURE PERMANENT POOL AT DESIGN ELEVATION. IF HIGHLY PERMEABLE SOILS ARE ENCOUNTERED THAT WOULD NOT MAINTAIN THE PERMANENT POOL ELEVATION AS DESIGNED, A CLAY LINER MAY BE REQUIRED TO MAINTAIN A PERMANENT POOL OF WATER IN THE STORMWATER CONTROL MEASURE. FINAL DETERMINATION IF A CLAY LINER IS NEEDED SHALL BE THE RESPONSIBILITY OF THE ON-SITE GEOTECHNICAL ENGINEER. UPON DETERMINATION OF HIGHLY PERMEABLE SOIL CONDITIONS, ON-SITE GEOTECHNICAL ENGINEER WILL INFORM THE DESIGN ENGINEER AND RECOMMEND LINER SPECIFICATIONS.

8. IT IS ANTICIPATED THAT DEWATERING WILL BE NECESSARY IN THE EXCAVATION AREAS (E.G. - EMBANKMENT SUB GRADE, INTERIOR PORTIONS OF THE STORMWATER CONTROL MEASURE, KEY TRENCH, ETC.). THEREFORE, THE CONTRACTOR SHALL FURNISH, INSTALL, OPERATE, AND MAINTAIN ANY PUMPING EQUIPMENT, ETC. NEEDED FOR REMOVAL OF WATER FROM VARIOUS PARTS OF THE STORMWATER CONTROL MEASURE SITE. DURING PLACEMENT OF FILL WITHIN THESE AREAS, THE CONTRACTOR SHALL KEEP THE WATER LEVEL BELOW THE BOTTOM OF THE EXCAVATION / CONSTRUCTION AREAS. THE MANNER IN WHICH THE WATER IS REMOVED SHALL BE SUCH THAT THE EXCAVATION BOTTOM AND SIDE SLOPES ARE STABLE, WITH NO SEDIMENT DISCHARGED FROM THE SITE (I.E. PUMPED WATER MAY NEED TO BE DIRECTED TO AN APPROVED EROSION CONTROL DEVICE SUCH AS A DIRT BAG (ACF ENVIRONMENTAL), OR ENGINEER APPROVED EQUIVALENT, PRIOR TO DISCHARGE).

9. THE RETAINING WALL ALIGNMENT SHOWN ON THESE PLANS DEPICTS THE LOCATION OF THE FRONT FACE OF THE RETAINING WALL AT THE BOTTOM.

10. THE RETAINING WALL IS TO BE A DESIGN-BUILD PROJECT(S) BY THE CONTRACTOR. IT SHALL BE THE CONTRACTOR'S RESPONSIBILITY TO OBTAIN FINAL CONSTRUCTION DRAWINGS FROM A REGISTERED PROFESSIONAL ENGINEER AND GAIN ALL REQUIRED PERMITS NECESSARY FOR THE CONSTRUCTION OF THE RETAINING WALL.

11. THE RETAINING WALL SHALL BE ASSUMED TO BE BACKFILLED WITH OFF-SITE BORROW MATERIAL OR PROCESSED FILL UNLESS CONTRACTOR CAN PROVIDE OWNER WITH CONFIRMATION FROM THE GEOTECHNICAL ENGINEER AND THE RETAINING WALL DESIGNER THAT READILY AVAILABLE ON-SITE SOILS CAN BE USED.

12. THE TOP AND BOTTOM OF WALL ELEVATIONS SHOWN ON THESE PLANS IDENTIFY FINISHED GRADE ELEVATIONS ONLY. THE EXTENT THAT THE RETAINING WALL WILL BE EXTENDED BELOW GRADE TO THE FOOTING SHALL BE IDENTIFIED ON THE RETAINING WALL CONSTRUCTION DRAWINGS.

13. THE ON-SITE GEOTECHNICAL ENGINEER SHOULD BE GIVEN AN OPPORTUNITY TO REVIEW ALL RETAINING WALL PLANS AND DESIGNS RELEVANT TO GEOTECHNICAL CONSIDERATIONS PRIOR TO FINAL DESIGN OF THE WALLS.

14. THE GRADES SHOWN ON THIS PLAN ARE FINISHED GRADES. IF THE EXISTING SOIL LAYER AFTER CONSTRUCTION / COMPACTION IS NOT DETERMINED SUITABLE BY A LANDSCAPE PROFESSIONAL FOR THE WET POND PLANTINGS, THEN THE CONTRACTOR SHALL AMEND THE PLANTING AREA OF THE WET POND AS DIRECTED BY A LANDSCAPE PROFESSIONAL.

15. PRIOR TO TOPSOIL INSTALLATION, THE CONTRACTOR SHALL SCARIFY THE TOP 2"-3" OF THE BERM SECTION TO PROMOTE BONDING OF THE TOPSOIL WITH THE COMPACTED FILL. THE TOPSOIL DEPTH SHALL RANGE FROM 3"-4" ON THE DAM EMBANKMENT AND AQUATIC SHELF. PLEASE NOTE THE TOPSOIL SHALL BE AMENDED, AS DIRECTED BY A LANDSCAPE PROFESSIONAL, PRIOR TO INSTALLATION ON THE EMBANKMENT AND AQUATIC SHELF.

16. THE CONTRACTOR SHALL REFER TO THE LANDSCAPE PLAN FOR THE PERMANENT PLANTING PLAN/SCHEDULE FOR THIS FACILITY. CONTRACTOR SHALL COORDINATE WITH A LANDSCAPE PROFESSIONAL REGARDING SCHEDULING FOR PLANT INSTALLATION. PLEASE NOTE THAT NO TREES/SHRUBS OF ANY TYPE MAY BE PLANTED ON THE PROPOSED DAM EMBANKMENT (FILL AREAS).

OUTLET STRUCTURE MATERIAL SPECIFICATIONS

1. THE 54"Ø RCP OUTLET BARREL SHALL BE CLASS III RCP, MODIFIED BELL AND SPIGOT, MEETING THE REQUIREMENTS OF ASTM C76-LATEST. THE PIPES SHALL HAVE CONFINED O-RING RUBBER GASKET JOINTS MEETING ASTM C-443-LATEST. THE PIPE JOINTS SHALL BE TYPE R-4.

2. THE STRUCTURAL DESIGN FOR THE 6' X 6' (INTERNAL DIMENSIONS) RISER BOX WITH EXTENDED BASE SHALL BE BY OTHERS. PRIOR TO ORDERING THE STRUCTURES, THE CONTRACTOR SHALL PROVIDE, TO THE DESIGN ENGINEER FOR REVIEW, SHOP DRAWINGS AND SUPPORTING STRUCTURAL CALCULATIONS SEALED BY A P.E. REGISTERED IN NORTH CAROLINA DEMONSTRATING THE PERTINENT VERTICAL LOADS ARE SUPPORTED BY THE CONCRETE RISER STRUCTURE.

3. THE RISER BOX OUTLET STRUCTURE SHALL BE PROVIDED WITH STEPS 16" ON CENTER. STEPS SHALL BE PROVIDED ON THE INNER WALL OF THE RISER BOX. STEPS SHALL BE IN ACCORDANCE WITH NCDOT STD. 840.66. PLEASE REFER TO SHEET C9.01 FOR LOCATION OF THE RISER STEPS. NOTE THE STEPS SHALL LINE UP WITH THE ACCESS HATCH OF THE TRASH RACK.

4. THE CONCRETE ANTI-FLOTATION BLOCK SHALL BE CAST-IN-PLACE. STEEL REINFORCEMENT AND CONNECTION TO THE RISER SHALL BE PROVIDED IN ACCORDANCE WITH THE DETAIL ON SHEET C9.02 THE CONTRACTOR SHALL ENSURE THE WEIGHT OF THE ENTIRE RISER STRUCTURE IS GREATER THAN OR EQUAL TO 9,334 LBS. IN LIEU OF CAST-IN-PLACE, THE CONTRACTOR MAY OPT FOR A PRECAST ANTI-FLOTATION BLOCK. SHOP DRAWINGS FOR THE PRECAST BLOCK SHALL BE SUBMITTED TO THE ENGINEER FOR REVIEW. THE PRECAST ANTI-FLOTATION BLOCK SHALL HAVE A SHIPPING WEIGHT OF 21,300 LBS.

5. THE RISER BOX JOINTS SHALL BE SEALED USING BUTYL RUBBER SEALANT CONFORMING TO ASTM-C990-LATEST. IF NECESSARY, THE CONTRACTOR SHALL INCORPORATE A WATERSTOP INTO THE RISER BOX JOINT TO ENSURE A WATERTIGHT CONNECTION. THE CONTRACTOR SHALL PARGE JOINTS ON BOTH THE INSIDE AND OUTSIDE WITH NON-SHRINK GROUT AND INSTALL GALVANIZED STEEL STRAPS PER DETAIL ON SHEET C9.01.

6. PRIOR TO ORDERING, THE CONTRACTOR SHALL SUBMIT TRASH RACK SHOP DRAWINGS TO THE ENGINEER FOR REVIEW. CONTRACTOR SHALL ENSURE THAT AN ACCESS HATCH IS PROVIDED WITHIN THE TRASH RACK (SEE DETAIL FOR LOCATION) THAT WILL ALLOW FOR FUTURE MAINTENANCE ACCESS. CONTRACTOR SHALL ALSO PROVIDE A CHAIN AND LOCK FOR SECURING THE ACCESS HATCH. NOTE THE ACCESS HATCH SHALL LINE UP WITH THE ACCESS STEPS AFTER INSTALLATION.

7. ALL POURED CONCRETE SHALL MEET THE FOLLOWING SPECIFICATIONS UNLESS OTHERWISE NOTED:

   -MINIMUM 3000 PSI (28 DAY)
   -SLUMP = 3" - 5"
   -ENTRAINED AIR = 5% - 7%

   PLEASE NOTE NO CONCRETE SHALL BE POURED WHEN THE AMBIENT AIR TEMPERATURES ARE EXPECTED TO BE ABOVE 85°F OR BELOW 40°F. CAST-IN-PLACE CONCRETE SHALL BE "WET CURED" AFTER FINISHING FOR A MINIMUM OF 48 HOURS.

   ON-SITE GEOTECHNICAL ENGINEER TO ENSURE AND CERTIFY ALL POURED CONCRETE MEETS THE ABOVE SPECIFICATIONS.

8. GEOTEXTILE FABRIC FOR THE 54"Ø RCP OUTLET BARREL JOINTS SHALL BE MIRAFI 180N OR ENGINEER APPROVED EQUAL (NON-WOVEN FABRIC).

9. STORMWATER CONTROL MEASURE EMERGENCY DRAW DOWN IS VIA A 6"Ø PLUG VALVE. THE VALVE SHALL BE A M&H STYLE 1820 ECCENTRIC VALVE OR APPROVED EQUAL. THIS VALVE IS IN ACCORDANCE WITH AWWA C-517, AND SHALL BE OPERABLE FROM TOP OF OUTLET STRUCTURE VIA A HAND WHEEL (SEE DETAIL SHEET C9.01). THE CONTRACTOR SHALL PROVIDE A REMOVABLE VALVE WRENCH WITH A HAND WHEEL ON TOP FOR OPERATION OF THE 6"Ø PLUG VALVE.

CONSTRUCTION SEQUENCE

1. THE REQUIRED TOWN OF KNIGHTDALE CONSTRUCTION SEQUENCE MUST BE FOLLOWED.

   1.1. SCHEDULE AN INITIAL PRE-CONSTRUCTION CONFERENCE WITH THE TOWN OF KNIGHTDALE. OBTAIN A LAND-DISTURBANCE PERMIT.
   1.2. INSTALL ALL PERIMETER CONTROLS AS SHOWN ON THE APPROVED PLANS, CLEAR ONLY AS NECESSARY TO INSTALL THESE DEVICES. CLEARING SHOULD BE LIMITED TO A MAXIMUM 35' "RIBBON" AROUND PERIMETER TO INSTALL CONTROLS. NO GRADING OR EXCAVATION SHOULD OCCUR.
   1.3. SHCEDULE AN ONSITE PRE-CONSTRUCTION MEETING WITH THE TOWN OF KNIGHTDALE TO INSPECT THE INSTALLED PERIMETER CONTROLS.
   1.4. IF APPROVED, PROCEED WITH INSTALLING GRAVEL CONSTRUCTION PAD, TEMPORARY DIVERSIONS, SILT FENCE, SEDIMENT BASINS, OR OTHER MEASURES AS SHOWN ON THE APPROVED PLANS. CLEAR ONLY AS NECESSARY TO INSTALL THESE DEVICES. SEED TEMPORARY DIVERSIONS, BERMS, AND BASINS IMMEDIATELY AFTER CONSTRUCTION.
   1.5. CALL TOWN OF KNIGHTDALE EROSION CONTROL INSPECTOR TO SCHEDULE AN ONSITE INSPECTION AND OBTAIN A CERTIFICATE OF COMPLIANCE.
   1.6. BEGIN CLEARING AND GRUBBING. MAINTAIN DEVICES AS NEEDED. ROUGH GRADE SITE.

CONSTRUCTION SEQUENCE (CONT.)

   1.7. INSTALL STORM SEWER, IF SHOWN, AND PROTECT INLETS WITH BLOCK AND GRAVEL CONTROLS, SEDIMENT TRAPS, OR OTHER APPROVED MEASURES AS SHOWN IN THE APPROVED PLAN. BEING CONSTRUCTION, BUILDING, ETC.
   1.8. STABILIZE SITE AS AREAS ARE BROUGHT UP TO FINISH GRADE WITH VEGETATION, PAVING, DITCH LININGS, ETC. SEED AND MULCH DENUDED AREAS PER GROUND STABILIZATION TIME FRAMES.
   1.9. WHEN CONSTRUCTION IS COMPLETE AND ALL AREAS ARE STABILIZED COMPLETELY, CALL EROSION CONTROL INSPECTOR FOR AN INSPECTION.
   1.10. IF SITE IS APPROVED, REMOVE TEMPORARY DIVERSIONS, SILT FENCE, SEDIMENT BASINS, ETC.M AND SEED OUT OR STABILIZE ANY RESULTING BARE AREAS. ALL REMAINING PERMANENT EROSION CONTROL DEVICES, SUCH AS VELOCITY DISSIPATORS, SHOULD NOW BE INSTALLED.
   1.11. WHEN VEGETATION HAS BECOME ESTABLISHED (90% GERMINATION), CALL FOR A FINAL INSPECTION BY THE EROSION CONTROL INSPECTOR. OBTAIN A CERTIFICATE OF COMPLETION.

2. PRIOR TO CONSTRUCTION, THE OWNER SHALL OBTAIN A LAND DISTURBING (GRADING) PERMIT AND AN "APPROVAL TO CONSTRUCT" FROM THE TOWN OF KNIGHTDALE AND ALL OTHER NECESSARY PERMITS FROM APPLICABLE AGENCIES (E.G. 404 / 401 PERMITS)

3. INSTALL ALL SEDIMENT AND EROSION CONTROL MEASURES PER THE APPROVED SEDIMENT AND EROSION CONTROL PLAN. THE CONTRACTOR SHALL MAINTAIN ALL APPROVED SEDIMENT AND EROSION CONTROL MEASURES THROUGHOUT THE ENTIRE PROJECT, AS REQUIRED. THE CONTRACTOR SHALL RECEIVE APPROVAL FROM THE EROSION CONTROL INSPECTOR, AS REQUIRED BY GOVERNING AGENCIES, PRIOR TO ANY CLEARING.

4. CLEAR AND GRUB AREA WITHIN THE LIMITS OF THE PROPOSED DAM CONSTRUCTION. ALL TREES AND THEIR ENTIRE ROOT SYSTEMS MUST BE REMOVED FROM THE DAM FOOTPRINT AREA AND BACKFILLED WITH SUITABLE SOIL MATERIAL. THE BACKFILLED AREAS SHALL BE COMPACTED TO THE SAME STANDARDS AS THE DAM EMBANKMENT. THE REMAINING AREA OF THE EMBANKMENT SHALL BE STRIPPED TO A SUITABLE DEPTH AS DIRECTED BY THE ON-SITE GEOTECHNICAL ENGINEER. ANY RESIDUAL SOILS TO BE LEFT IN PLACE MUST BE WELL SCARIFIED TO PROMOTE BONDING OF THE NEW EMBANKMENT FILL. NO EMBANKMENT MATERIAL SHALL BE PLACED FOR THE DAM OR KEY TRENCH UNTIL APPROVAL OF THE DAM SUBGRADE IS OBTAINED FROM THE ON-SITE GEOTECHNICAL ENGINEER.

5. EXCAVATE FOR THE NEW KEY TRENCH ALONG THE CENTERLINE OF THE PROPOSED DAM EMBANKMENT. THE TRENCH SHALL EXTEND A MINIMUM OF 5 FT BELOW EXISTING GRADE OR 2 FT BELOW THE 54"Ø RCP OUTLET BARREL AND SHALL HAVE A MINIMUM BOTTOM WIDTH OF 5 FEET. THE KEY TRENCH SIDESLOPES SHALL BE A MINIMUM OF 1:1 (H:V). WHEN EXCAVATING THE KEY TRENCH, IF ANY DEBRIS IS ENCOUNTERED TO AN EXTENT THAT SUCH DEBRIS MAY EXIST IN OTHER INSITU PORTIONS OF THE DAM EMBANKMENT, IT SHOULD ALSO BE REMOVED. THE KEY TRENCH SHALL BE COMPACTED TO THE SAME SPECIFICATION LISTED IN ITEM 4 OF THE SECTION TITLED "BERM AND SOIL COMPACTION SPECIFICATIONS." DEPENDING UPON ON-SITE SOIL CONDITIONS ENCOUNTERED DURING EXCAVATION, THE ON-SITE GEOTECHNICAL ENGINEER MAY VARY THE DEPTH AND DIMENSIONS OF THE KEY TRENCH AS DEEMED NECESSARY. THE ON-SITE GEOTECHNICAL ENGINEER SHALL RETAIN DOCUMENTATION OF ANY VARIATION FOR FUTURE AS-BUILT SUBMITTALS TO THE TOWN OF KNIGHTDALE.

6. BEGIN PLACEMENT OF BACKFILL WITHIN THE KEY TRENCH. THE KEY TRENCH SHALL BE COMPACTED TO THE SPECIFICATIONS LISTED ITEM 4 OF THE SECTION TITLED "BERM AND SOIL COMPACTION SPECIFICATIONS." THE KEY TRENCH SHALL BE TESTED PER THE SPECIFICATIONS LISTED IN THAT SECTION.

7. PRIOR TO INSTALLATION, SUBGRADE CONDITIONS ALONG THE SPILLWAY PIPES SHOULD BE EVALUATED BY THE ON-SITE GEOTECHNICAL ENGINEER TO ASSESS WHETHER SUITABLE BEARING CONDITIONS EXIST AT THE SUBGRADE LEVEL. SHOULD SOFT OR OTHERWISE UNSUITABLE CONDITIONS BE ENCOUNTERED ALONG THE PIPE ALIGNMENTS, THESE MATERIALS SHOULD BE UNDERCUT AS DIRECTED BY THE GEOTECHNICAL ENGINEER. THE UNDERCUT MATERIALS SHALL BE REPLACED WITH ADEQUATELY COMPACTED STRUCTURAL FILL, LEAN CONCRETE OR FLOWABLE FILL AS DIRECTED BY THE ON-SITE GEOTECHNICAL ENGINEER.

8. IN ORDER TO HELP PROTECT THE SOIL SUBGRADE FROM DETERIORATION (DUE TO EXPOSURE, RAINFALL, SEEPAGE, AND RUNOFF) BEFORE THE CRADLE CAN BE POURED, IT IS STRONGLY RECOMMENDED THAT A 3" TO 4" THICK CONCRETE MUD MAT BE POURED OVER THE SUBGRADE ONCE IT IS APPROVED BY THE ON-SITE GEOTECHNICAL ENGINEER. THE MUD MAT WILL ALSO PROVIDE BEARING FOR THE BLOCKS THAT TEMPORARILY SUPPORT THE SPILLWAY PIPE UNTIL THE CRADLE CAN BE POURED. THE METHOD OF BLOCK SUPPORT FOR THE PIPE PROPOSED BY THE CONTRACTOR SHOULD BE SUBMITTED TO THE JOHN R. McADAMS COMPANY FOR REVIEW.

9. BEGIN CONSTRUCTION OF THE NEW EMBANKMENT. FILL MATERIALS SHALL BE PLACED IN MAXIMUM 8" THICK LIFTS PRIOR TO COMPACTION, UNLESS DIRECTED OTHERWISE BY THE ON-SITE GEOTECHNICAL ENGINEER. FILL LIFTS SHALL BE CONTINUOUS OVER THE ENTIRE LENGTH OF FILL. IF IT IS NECESSARY, THE EMBANKMENT FILL MATERIAL WILL BE OVERBUILT IN HORIZONTAL LIFTS AND CUT BACK TO FINAL GRADE IN ORDER TO ACHIEVE PROPER COMPACTION.

10. AS CONSTRUCTION OF THE EMBANKMENT MOVES FORWARD, IT WILL BE NECESSARY TO INSTALL THE CONCRETE CRADLE. SEE NOTE ON CRADLE DETAIL (SHEET C9.02). THIS MAY BE CONSTRUCTED USING ONE OF THE FOLLOWING METHODS:

    A. IF THE PROPOSED STRUCTURAL FILL MATERIAL IS UTILIZED AS THE FORMWORK FOR THE CONCRETE CRADLE, THEN THE STRUCTURAL FILL SHOULD BE INSTALLED AND COMPACTED UP TO THE TOP OF CONCRETE CRADLE ELEVATION. ONCE THE STRUCTURAL FILL REACHES THE NEXT DOWNSTREAM JUNCTION BOX OR HEADWALL AND IS COMPACTED TO THE ELEVATION OF THE TOP OF THE CONCRETE CRADLE, EXCAVATE THE CONCRETE CRADLE TRENCH PER THE PROVIDED DETAILS AND CONSTRUCT THE CONCRETE CRADLE AS PER THE PROVIDED CONCRETE CRADLE DETAIL.

    B. IF THE PROPOSED STRUCTURAL FILL IS NOT UTILIZED AS THE FORMWORK FOR THE CONCRETE CRADLE, THEN PRIOR TO CONSTRUCTING THE STRUCTURAL FILL EMBANKMENT, THE FORMWORK FOR THE CONCRETE CRADLE SHOULD BE INSTALLED ON EXISTING GROUND AND/OR THE MUD MAT. THE CONCRETE CRADLE SHALL BE CONSTRUCTED PER THE PROVIDED DETAILS

11. INSTALL RISER / BARREL ASSEMBLY, ALONG WITH THE EMERGENCY DRAIN SYSTEM. INSTALL 54" RCP OUTLET BARREL SPILLWAY FILTER FROM THE DETAILS SHOWN ON SHEET C9.02.

12. CONSTRUCT EMBANKMENT PER SPECIFICATIONS LISTED IN THE SECTION TITLED "BERM AND SOIL COMPACTION SPECIFICATIONS" AND REQUIREMENTS OF THE ON-SITE GEOTECHNICAL ENGINEER. ALL CHARACTERISTICS OF THE EMBANKMENT FILL MATERIAL SHALL MEET THE STANDARDS SET FORTH IN "BERM AND SOIL COMPACTION SPECIFICATIONS", INCLUDING COMPACTION AND MOISTURE REQUIREMENTS. IF NECESSARY TO ACHIEVE PROPER COMPACTION, THE EMBANKMENT FILL MATERIAL WILL BE OVERBUILT IN HORIZONTAL LIFTS AND CUT BACK TO PROPER FINAL GRADE. ANY HAND COMPACTION ACTIVITIES AROUND SPILLWAY OR DRAIN STRUCTURES SHALL BE CONDUCTED IN 4-INCH LOOSE LIFTS AND BE TO THE SAME COMPACTION AND MOISTURE REQUIREMENTS AS THE ENTIRE EMBANKMENT. ALL COMPACTION AND MOISTURE TESTING SHALL BE CARRIED OUT AS DIRECTED BY THE ON-SITE GEOTECHNICAL ENGINEER AND AS LISTED IN THE SECTION TITLED "BERM AND SOIL COMPACTION SPECIFICATIONS".

13. UPON COMPLETION OF DAM EMBANKMENT, PROMPTLY STABILIZE AND SEED DAM EMBANKMENT PER SEEDING SCHEDULE. PERMANENT GROUND COVER SHALL BE ESTABLISHED PER THE PERMANENT SEEDING SCHEDULE FOUND ON SHEET C9.04.

14. THE CONTRACTOR SHALL CONSTRUCT THE ENTIRE FACILITY (PERMANENT OUTLET STRUCTURE, DAM, ETC.) WITH THE EXCEPTION OF THE INTERIOR FINE GRADING FOR THE FACILITY. THE INTERIOR FINE GRADING WILL BE CONSTRUCTED ONCE THE EROSION CONTROL PHASE IS COMPLETE. THE TEMPORARY DRAW DOWN RISER (OR SKIMMER) SHALL BE CONNECTED TO THE PERMANENT 6"Ø DIP DRAIN PIPE ONCE THE UPSTREAM DRAINAGE AREA IS STABILIZED.

15. THE REQUIRED TOWN OF KNIGHTDALE SCM BASIN REMOVAL SEQUENCE MUST BE FOLLOWED.
    15.1. SCHEDULE A SITE MEETING WITH THE TOWN OF KNIGHTDALE EROSION CONTROL INSPECTOR TO DETERMINE IF A BASIN CAN BE REMOVED. INSTALL SILT FENCING OR OTHER TEMPORARY EROSION CONTROL MEASURES AS NEEDED PRIOR TO REMOVAL OF THE BASIN.
    15.2. CONTACT NCDEQ - RALEIGH REGIONAL OFFICE (919) 791-4200 TO DETERMINE THE DIVISION OF ENERGY, MINERAL AND LAND RESOURCES CONTACT PERSON TO RECEIVE DEWATERING NOTIFICATIONS. AT LEAST 10 DAYS PRIOR TO BEGINNING DEWATERING ACTIVITY, SEND EMAIL TO NCDEQ-DEMLR CONTACT PERSON AND COPY ENVIRONMENTAL CONSULTANT THAT MET YOU ONSITE. THE EMAIL SHOULD INCLUDE E&SC JURISDICTION: TOWN OF KNIGHTDALE, TOK PROJECT: NAME, NUMBER, AND LOCATION (CITY/TOWN), ENVIRONMENTAL CONSULTANT NAME, AND ADDRESS THE FOLLOWING: A) REASON FOR CONVERSION, B) BASIN #, C) DEWATERING METHOD, AND D) ALL OTHER NECESSARY INFO FROM PART II, SECTION G, ITEM 4 OF THE NCG01. (KEEP EMAIL FOR YOUR NPDES MONITORING DOCUMENTATION
    15.3. AFTER RECEIVING POSITIVE CONFIRMATION FROM NCDEQ-DEMLR THAT YOU MAY REMOVE THE BASIN OR ON > DAY 11, WHICHEVER IS SOONER. REMOVE BASIN(S) AND ASSOCIATED TEMPORARY DIVERSION DITCHES. IF PIPES NEED TO BE EXTENDED, PERFORM THIS OPERATION AT THIS TIME. FINE GRADE AREA IN PREPARATION FOR SEEDING.
    15.4. PERFORM SEEDBED PREPARATION, SEED, MULCH AND ANCHOR ANY RESULTING BARE AREAS IMMEDIATELY USING NON-CLUMPING TURF GRASS (CENTIPEDE / HYBRID BERMUDA)
    15.5. INSTALL VELOCITY DISSIPATORS AND/OR LEVEL SPREADERS AS REQUIRED ON THE EROSION CONTROL PLAN.
    15.6. WHEN SITE IS FULLY STABILIZED, CALL EROSION CONTROL INSPECTOR FOR APPROVAL OF REMOVING REMAINING TEMPORARY EROSION CONTROL MEASURES AND ADVICE ON WHEN SITE CAN BE ISSUED A CERTIFICATE OF COMPLETION. NOTE: A MEETING SHOULD ALSO BE SCHEDULED WITH THE EROSION CONTROL INSPECTOR AND STORMWATER TECHNICIAN TO DETERMINE WHEN A BASIN MAY BE CONVERTED FOR STORMWATER USE.

16. SCHEDULE A FINAL AS-BUILT INSPECTION AND AS-BUILT SURVEY WITH THE ENGINEER AND SURVEYOR. AN AS-BUILT INSPECTION AND SURVEY SHALL BE SCHEDULED BEFORE IMPOUNDING WATER IN THE FACILITY AND A MINIMUM OF 60 DAYS PRIOR TO THE ANTICIPATED DATE OF CERTIFICATION APPROVAL. ANY COMMENTS OR DEFICIENCIES IN THE SCM CONSTRUCTION MUST BE CORRECTED TO THE SATISFACTION OF THE ENGINEER AND OWNER BEFORE CERTIFICATION SHALL BE GRANTED.

BERM AND SOIL COMPACTION SPECIFICATIONS

1. PRIOR TO CONSTRUCTION, THE ON-SITE GEOTECHNICAL ENGINEER SHALL IDENTIFY BORROW / FILL AREAS AND VERIFY THEIR SUITABILITY FOR USE WITHIN THE DAM EMBANKMENT. ALSO, THE ON-SITE GEOTECHNICAL ENGINEER SHALL PERFORM STANDARD PROCTORS ON THE PROPOSED BORROW MATERIAL TO ENSURE THAT OPTIMUM MOISTURE CONTENT AND COMPACTION CAN BE ACHIEVED / CONTROLLED DURING CONSTRUCTION.

2. ALL FILL MATERIALS TO BE USED FOR THE DAM EMBANKMENT SHALL BE TAKEN FROM BORROW AREAS APPROVED BY THE ON-SITE GEOTECHNICAL ENGINEER. THE FILL MATERIAL SHALL BE FREE FROM ROOTS, STUMPS, WOOD, STONES GREATER THAN 6", AND FROZEN OR OTHER OBJECTIONABLE MATERIAL. THE FOLLOWING SOIL TYPES ARE SUITABLE FOR USE AS FILL WITHIN THE DAM EMBANKMENT AND KEY TRENCH: ML AND CL. ALL FILL MATERIALS SHALL BE APPROVED BY THE ONSITE GEOTECHNICAL ENGINEER FOR THE INTENDED USE.

3. FILL PLACEMENT FOR THE EMBANKMENT SHALL NOT EXCEED A MAXIMUM 8" LIFT (UNCOMPACTED). EACH LIFT SHALL BE CONTINUOUS FOR THE ENTIRE LENGTH OF EMBANKMENT. BEFORE PLACEMENT OF FILL FOR THE BERM SECTION, ALL UNSUITABLE MATERIAL SHALL BE REMOVED AND THE SURFACE PROPERLY PREPARED FOR FILL PLACEMENT. FILL MATERIAL ADJACENT TO ALL SPILLWAY AND DRAINAGE STRUCTURES SHALL BE PLACED IN 4-INCH (UNCOMPACTED) LIFTS AND HAND-COMPACTED TO THE SAME COMPACTION AND MOISTURE REQUIREMENTS AS THE ENTIRE EMBANKMENT.

4. ALL FILL SOILS USED IN THE EMBANKMENT CONSTRUCTION SHALL BE COMPACTED TO AT LEAST 95% OF THE STANDARD PROCTOR MAXIMUM DRY DENSITY (ASTM D-698). THE FILL SOILS SHALL BE COMPACTED AT A MOISTURE CONTENT WITHIN -1 TO +3 PERCENT OF ITS OPTIMUM MOISTURE CONTENT. COMPACTION TESTS SHALL BE PERFORMED BY THE ON-SITE GEOTECHNICAL ENGINEER DURING CONSTRUCTION TO VERIFY THAT THE PROPER COMPACTION LEVEL HAS BEEN REACHED. THE FILL SHOULD BE COMPACTED USING A SHEEPSFOOT TYPE COMPACTOR. IN ORDER TO PREVENT DAMAGE TO THE PIPE, NO COMPACTION EQUIPMENT SHALL CROSS ANY PIPE UNTIL MINIMUM COVER IS ESTABLISHED ALONG THE PIPE.

5. THE DESIGN ENGINEER SHALL BE PROVIDED WITH REPORTS AND CERTIFICATION, BY THE ON-SITE GEOTECHNICAL ENGINEER, THAT THE GEOTECHNICAL ASPECTS OF THE FACILITY HAVE BEEN CONSTRUCTED PER PLAN. THIS CERTIFICATION MUST ADDRESS THE TESTING FOR MATERIALS AND COMPACTION OF THE DAM EMBANKMENT AND SPILLWAY. THESE REPORTS AND CERTIFICATION WILL BE NEEDED DURING THE AS-BUILT CERTIFICATION PROCESS FOR THIS STORMWATER CONTROL MEASURE. THEREFORE, IT SHALL BE THE CONTRACTOR'S RESPONSIBILITY TO COORDINATE TESTING AND OBSERVATION WITH THE ON-SITE GEOTECHNICAL ENGINEER.

6. TESTING OF THE NEW FILL MATERIALS SHALL BE PERFORMED TO VERIFY THAT THE RECOMMENDED LEVEL OF COMPACTION IS ACHIEVED DURING CONSTRUCTION. THEREFORE, ONE DENSITY TEST SHALL BE PERFORMED FOR EVERY 2,500 SQUARE FEET OF AREA FOR EVERY LIFT OF FILL OR AS RECOMMENDED BY THE ON-SITE GEOTECHNICAL ENGINEER.

7. TESTING WILL BE REQUIRED ALONG THE 54"Ø RCP OUTLET BARREL AT A FREQUENCY OF ONE TEST PER 25 LF OF PIPE PER VERTICAL FOOT OF FILL OR AS DIRECTED BY THE ON-SITE GEOTECHNICAL ENGINEER.

STATEMENT OF RESPONSIBILITY

1. ALL REQUIRED MAINTENANCE AND INSPECTIONS OF THE STORMWATER CONTROL MEASURE SHALL BE THE RESPONSIBILITY OF THE OWNER, PER THE EXECUTED OPERATION AND MAINTENANCE AGREEMENT FOR THIS FACILITY.

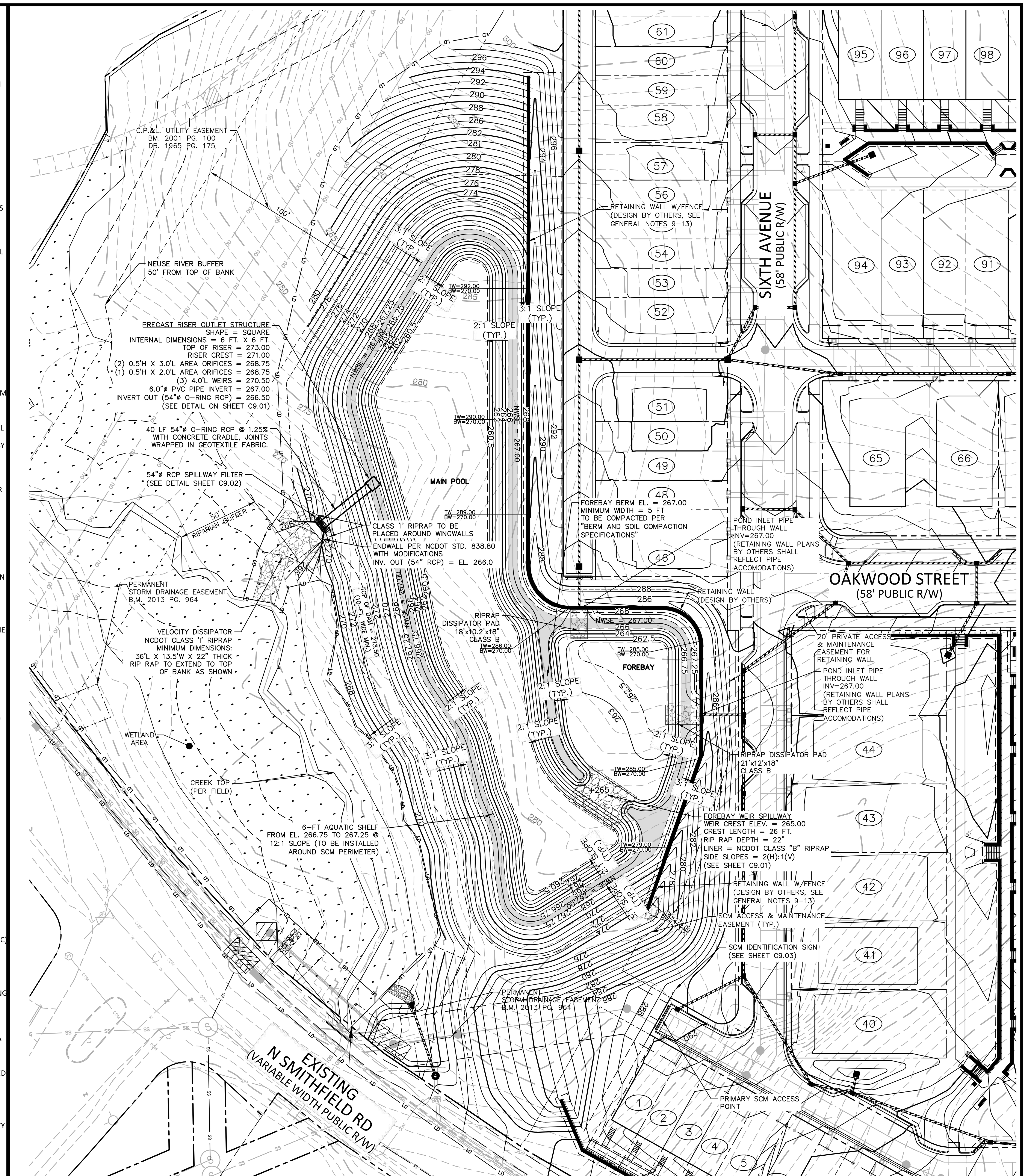

STORMWATER WETPOND 'A' PLAN VIEW

1" = 40'

TOWN OF KNIGHTDALE INSPECTION REQUIREMENTS

REQUIRED INSPECTION SEQUENCE:
- SEDIMENT BASIN CONVERSION (PREINSPECTION OUTLINED IN ESC SEQUENCE)
- COMPLETION INSPECTION (FOLLOWING CONVERSION)
- AS-BUILT/CERTIFICATION INSPECTION
- FINAL CERTIFICATION INSPECTION BY TOWN OF KNIGHTDALE
- HOA HANDOFF MEETING (ONSITE)

WHEN SCHEDULING INSPECTIONS, PLEASE CALL THE PUBLIC WORKS ADMINISTRATIVE ASSITANT AT (919)-217-2250. PLEASE NOTE: THE FOLLOWING PERSONNEL MUST BE PRESENT AT ALL INSPECTIONS:
1. SITE SUPERVISOR
2. GEOTECH
3. AS-BUILT CERTIFYING ENGINEER OR SOMEONE UNDER THEIR SUPERVISION

THE FOLLOWING ITEMS MUST BE INSPECTED BY TOK STAFF DURING INSTALLATION:
ANY SCM WITH DAM
KEY TRENCH EXCAVATION
PRINCIPAL SPILLWAY PIPE AND ASSOCIATED COMPONENTS:
- CONCRETE CRADLE
- ANTI-SEEP COLLAR
- SEEPAGE DIAPHRAGM
- OUTLET STRUCTURE
- ANTI-FLOTATION BALLAST
- ANY SITE-CONSTRUCTED REINFORCED CONCRETE STRUCTURES

DAM FILTERS, BIORETENTION DEVICES
- SUBGRADE OR CONSTRUCTED FOUNDATION
- OUTLET OR RISER IN COMBINATION WITH CONNECTING UNDERDRAINS
- FILTER MEDIA
- DAM ITEMS ABOVE IF APPLICABLE

GRAPHIC SCALE
0 20 40 80
1 inch = 40 ft.

SEE SHEET C0.01 FOR ALL PROJECT, SITE, GRADING, STORM DRAINAGE AND UTILITY NOTES

ALL CONSTRUCTION SHALL BE IN ACCORDANCE WITH THE CURRENT TOWN OF KNIGHTDALE, CITY OF RALEIGH PUBLIC UTILITIES, AND NCDOT (WHERE APPLICABLE) ENGINEERING DESIGN AND CONSTRUCTION STANDARDS

Town Certification. This design has been reviewed by the Engineer for the Town of Knightdale, and to the best of my knowledge and belief, it conforms to the requirements established in the Standard Specifications of the Town of Knightdale.
By: ____________________ Date: ____________
Town Engineer
These plans are approved by the Town of Knightdale and serve as construction plans for this project.
By: ____________________ Date: ____________
Administrator

FINAL DRAWING - RELEASED FOR CONSTRUCTION

MCADAMS
The John R. McAdams Company, Inc.
2905 Meridian Parkway
Durham, NC 27713

phone 919. 361. 5000
fax 919. 361. 2269
license number: C-0293, C-187

www.mcadamsco.com

CLIENT

ALLIANCE GROUP OF NC, LLC
7208 FALLS OF NEUSE RD, SUITE 101
RALEIGH, NORTH CAROLINA 27615
JACOB ANDERSON
PHONE: 919. 239. 9486

AGNC
BROKERAGE | CONSULTING | PLANNING

DOWNTOWN NORTH AT KNIGHTDALE STATION
CONSTRUCTION DRAWINGS - PHASE 1
N SMITHFIELD ROAD
KNIGHTDALE, NORTH CAROLINA

NORTH CAROLINA PROFESSIONAL ENGINEER SEAL 47257 KATHERINE E. GARCIA
2/6/24

REVISIONS

NO.	DATE	
1	----	----
2	----	----
3	----	----
4	----	----
5	----	----
6	----	----

PLAN INFORMATION

PROJECT NO.	AGN-21002
FILENAME	AGN21002-SW1
CHECKED BY	KEG
DRAWN BY	SDD
SCALE	1" = 40'
DATE	02. 09. 2024

SHEET

SCM ''A'' PLAN VIEW

C9.00

M:\Projects\AGN\AGN21002\04-Production\Engineering\Current Drawings\Construction Drawings Sets\Phase-1\AGN21002-SW1.dwg, 2/6/2024 1:50:12 PM, Samantha Daniell

NOTE:

1. REMOVED TOPSOIL SHALL BE STOCKPILED FOR USE IN PLANTING (SEEDING) THE DAM EMBANKMENT ONCE FINAL GRADES (AS SHOWN ON THE GRADING PLAN) HAVE BEEN ESTABLISHED WITH COMPACTED FILL. PRIOR TO TOPSOIL INSTALLATION, THE CONTRACTOR SHALL SCARIFY THE TOP 2- TO 3-INCHES OF THE BERMN SECTION TO PROMOTE BONDING OF THE TOPSOIL WITH THE COMPACTED FILL. THE TOPSOIL DEPTH SHALL RANGE FROM 3- TO 4-INCHES ON THE DAM EMBANKMENT.

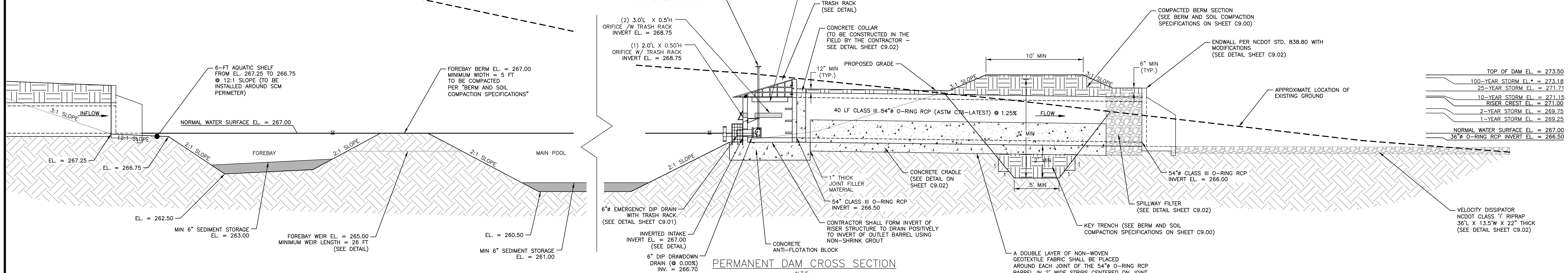

PERMANENT DAM CROSS SECTION
N.T.S.

*100-YEAR STORM ELEVATION CALCULATED CONSIDERING TAILWATER CONDITION

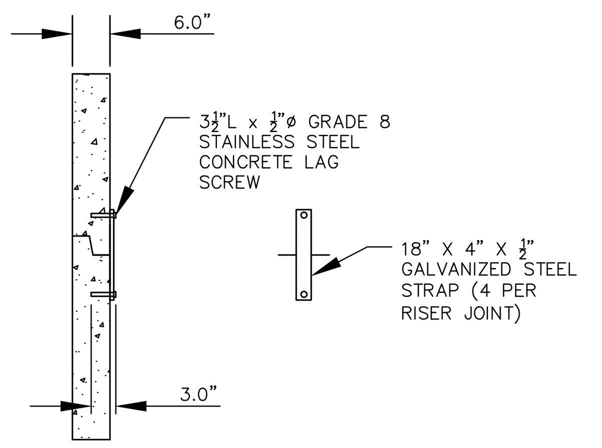

RISER JOINT CONNECTION DETAIL
N.T.S.

NOTES:

1. CONCRETE ANTI-FLOTATION BLOCK TO BE PROVIDED WITH MINIMUM TEMPERATURE AND SHRINKAGE STEEL REINFORCEMENT.

2. TRASH RACKS NOT SHOWN FOR CLARITY.

3. THE NUMBER OF GUIDES FOR THE VALVE STEM SHALL BE DETERMINED IN THE FIELD BY THE CONTRACTOR. THE VALVE STEM MUST BE OPERABLE FROM THE TOP OF THE RISER VIA THE HANDWHEEL WITH AN INSIGNIFICANT AMOUNT OF PLAY IN THE VALVE STEM.

4. CONTRACTOR SHALL PROVIDE A JOINT IN THE OUTLET BARREL NO MORE THAN 5-FT FROM THE RISER.

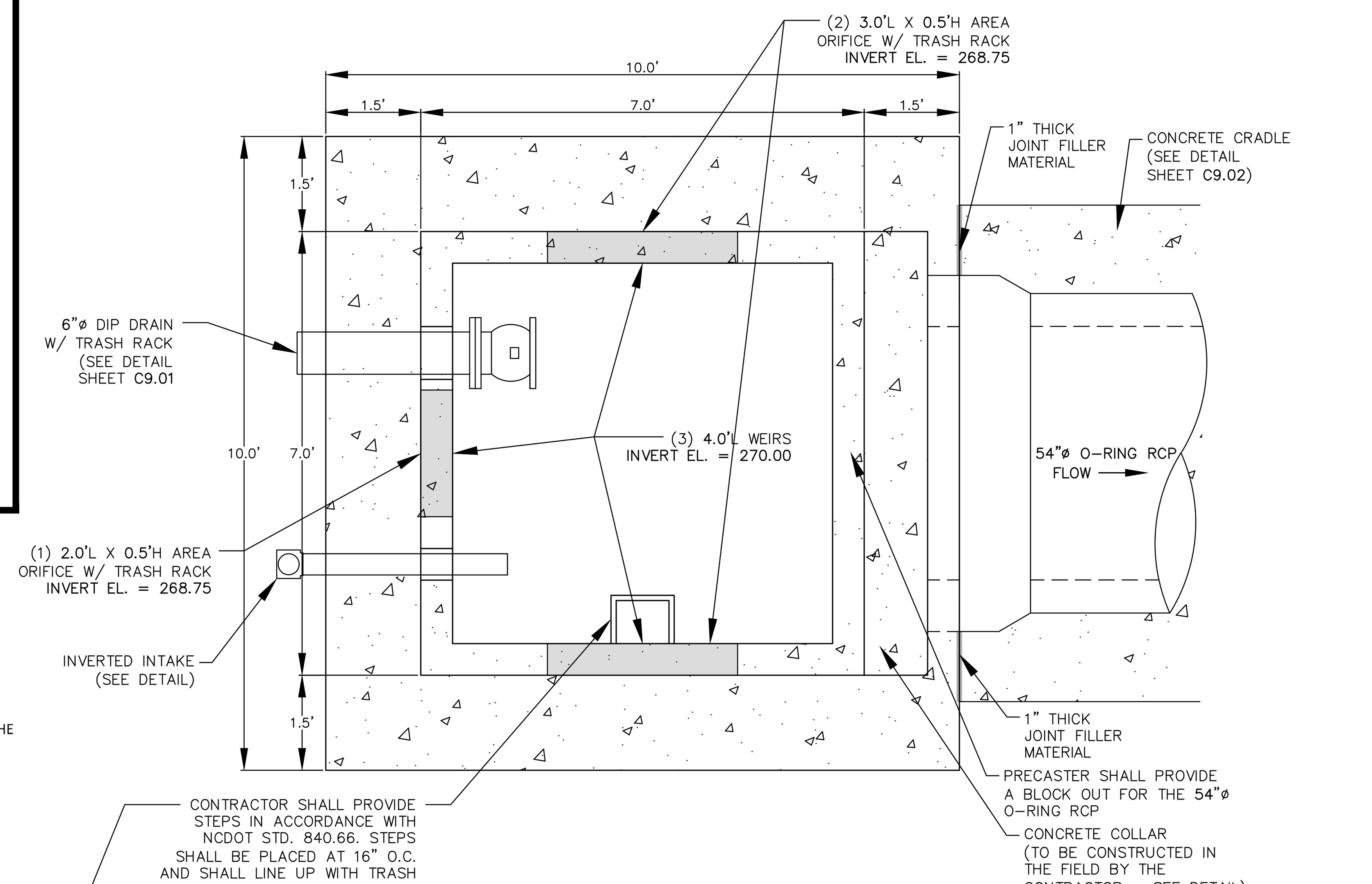

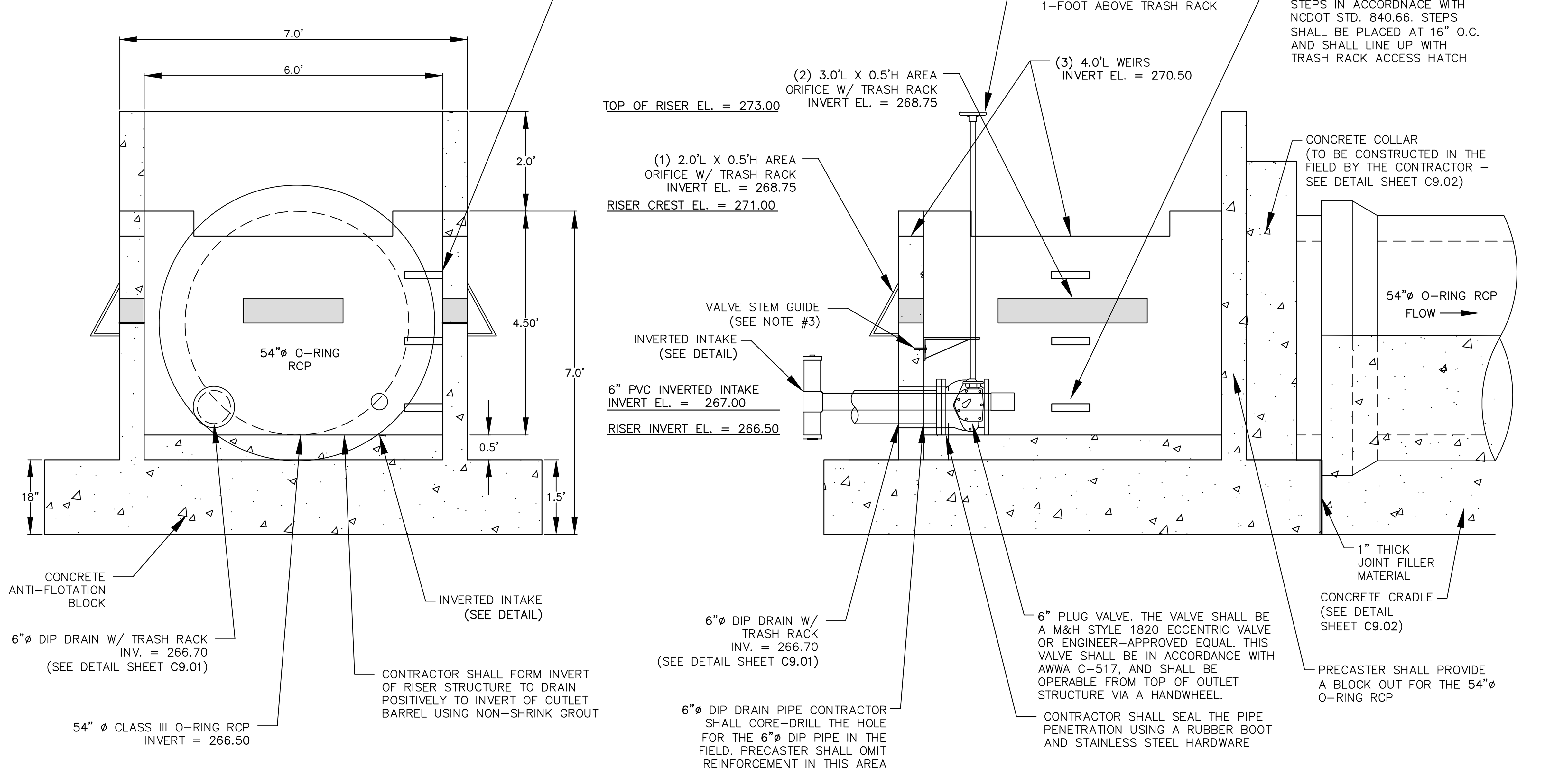

PERMANENT OUTLET STRUCTURE DETAILS
N.T.S.

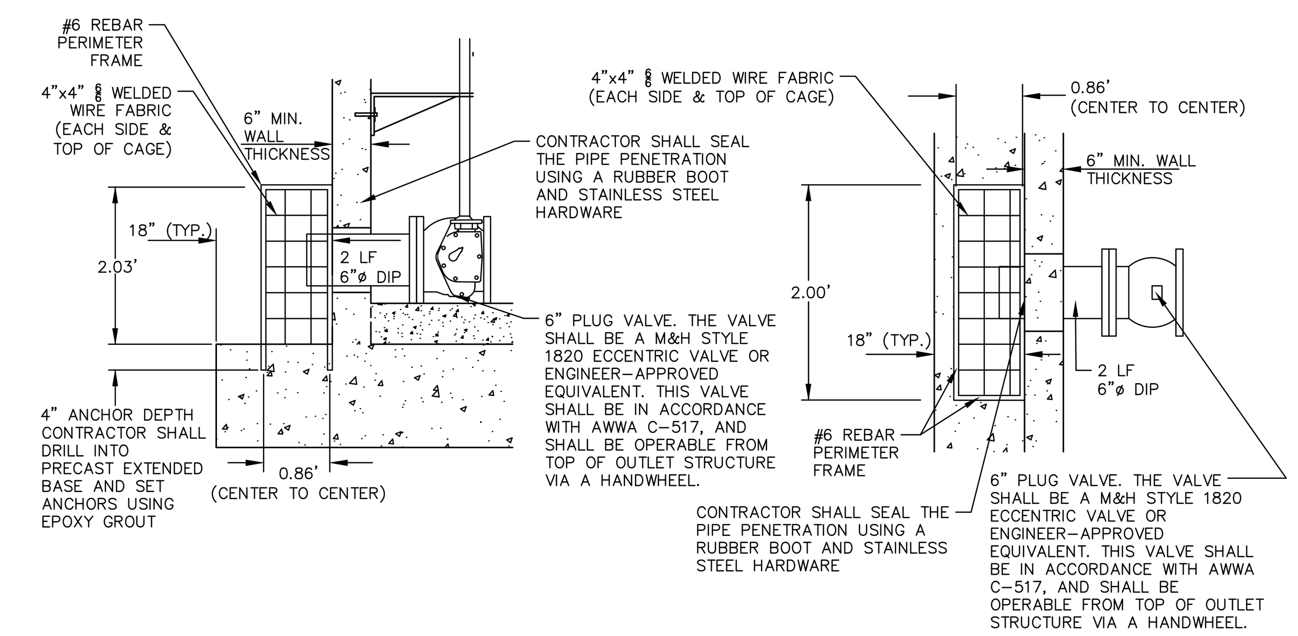

6"ø EMERGENCY DIP DRAIN TRASH RACK DETAILS
N.T.S.

NOTE: RIPRAP TO EXTEND FROM TOE OF FOREBAY TO TOE OF MAIN POOL

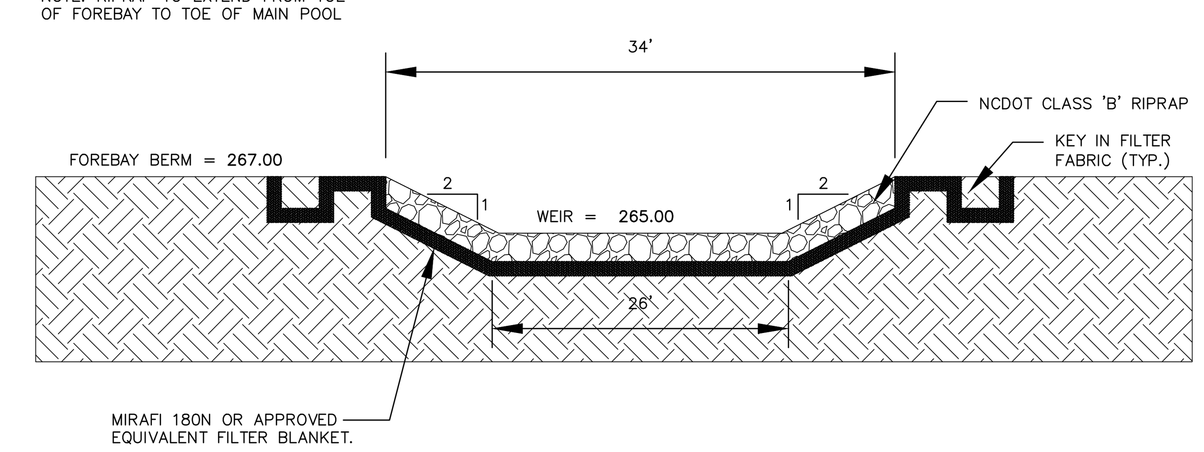

FOREBAY WEIR SPILLWAY CROSS-SECTION
N.T.S.

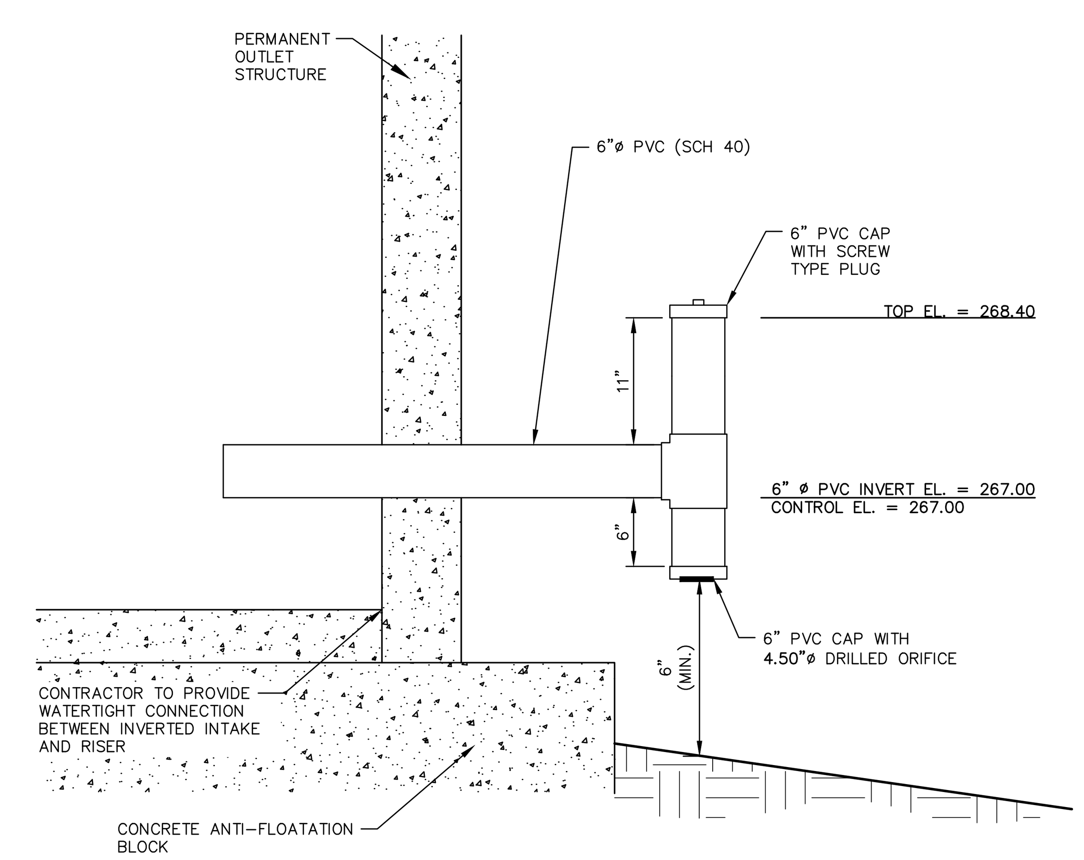

INVERTED INTAKE DETAIL (RISER)
N.T.S.

SEE SHEET C0.01 FOR ALL PROJECT, SITE, GRADING, STORM DRAINAGE AND UTILITY NOTES

ALL CONSTRUCTION SHALL BE IN ACCORDANCE WITH THE CURRENT TOWN OF KNIGHTDALE, CITY OF RALEIGH PUBLIC UTILITIES, AND NCDOT (WHERE APPLICABLE) ENGINEERING DESIGN AND CONSTRUCTION STANDARDS

Town Certification. This design has been reviewed by the Engineer for the Town of Knightdale, and to the best of my knowledge and belief, it conforms to the requirements established in the Standard Specifications of the Town of Knightdale.
By: ____________________ Date: ____________
Town Engineer
These plans are approved by the Town of Knightdale and serve as construction plans for this project.
By: ____________________ Date: ____________
Administrator

FINAL DRAWING - RELEASED FOR CONSTRUCTION

McADAMS
The John R. McAdams Company, Inc.
2905 Meridian Parkway
Durham, NC 27713

phone 919. 361. 5000
fax 919. 361. 2269
license number: C-0293, C-187

www.mcadamsco.com

CLIENT

ALLIANCE GROUP OF NC, LLC
7208 FALLS OF NEUSE RD, SUITE 101
RALEIGH, NORTH CAROLINA 27615
JACOB ANDERSON
PHONE: 919. 239. 9486

AGNC

DOWNTOWN NORTH AT KNIGHTDALE STATION
CONSTRUCTION DRAWINGS - PHASE 1
N SMITHFIELD ROAD
KNIGHTDALE, NORTH CAROLINA

NORTH CAROLINA PROFESSIONAL SEAL 47257 ENGINEER KATHERINE E. GARCIA
2/6/24

REVISIONS

NO.	DATE	
1	----	----
2	----	----
3	----	----
4	----	----
5	----	----
6	----	----

PLAN INFORMATION

PROJECT NO.	AGN-21002
FILENAME	AGN21002-SW1
CHECKED BY	KEG
DRAWN BY	SDD
SCALE	N.T.S.
DATE	02. 09. 2024

SHEET

SCM ''A'' DETAILS

C9.01

M:\Projects\AGN\AGN21002\04-Production\Engineering\Current Drawings\Construction Drawings Sets\Phase-1\AGN21002-SW1.dwg, 2/6/2024 1:50:25 PM, Samantha Daniell

NOTES:

1. ATTACH TRASH RACK WITH (4) HOT DIPPED GALVANIZED STEEL CLAMPS. EACH CLAMP ATTACHED TO WEIR BOX BY (2) 4"x1/4" CONCRETE ANCHOR BOLTS. EACH CLAMP SHALL BE COATED WITH AN EPOXY COATING.
2. ALL REBAR TO BE GALVANIZED #4 REBAR WITH AN EPOXY COATING.
3. BARS TO EXTEND ON BOTTOM OF TRASH RACK.

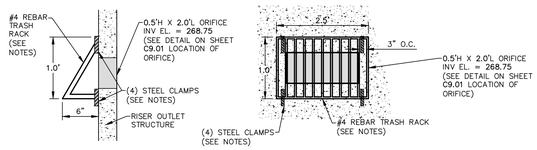

0.5'H x 2.0'L
AREA ORIFICE TRASH RACK DETAIL
N.T.S.

NOTES:

1. ATTACH TRASH RACK WITH (4) HOT DIPPED GALVANIZED STEEL CLAMPS. EACH CLAMP ATTACHED TO WEIR BOX BY (2) 4"x1/4" CONCRETE ANCHOR BOLTS. EACH CLAMP SHALL BE COATED WITH AN EPOXY COATING.
2. ALL REBAR TO BE GALVANIZED #4 REBAR WITH AN EPOXY COATING.
3. BARS TO EXTEND ON BOTTOM OF TRASH RACK.

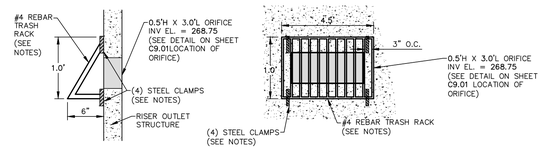

0.5'H x 3.0'L
AREA ORIFICE TRASH RACK DETAIL
N.T.S.

NOTE:

1. CONTRACTOR SHALL PROVIDE A JOINT IN THE OUTLET BARREL NO MORE THAN 5-FT FROM THE RISER.

BARREL PIPE CONCRETE CRADLE CONSTRUCTION SEQUENCE

1. IF OPTION A IS CHOSEN FROM NOTE 10 OF THE CONSTRUCTION SEQUENCE, THEN BRING GRADE OF DAM EMBANKMENT TO SPRINGLINE OF PIPE ELEVATION. IF OPTION B IS CHOSEN FROM NOTE 10 OF THE OUTLET STRUCTURE MATERIAL SPECIFICATIONS, THEN CONSTRUCT FORMWORK FOR CONCRETE CRADLE ON EXISTING GRADE.
2. IF OPTION A IS CHOSEN FROM NOTE 10 OF THE CONSTRUCTION SEQUENCE, THEN EXCAVATE TRENCH FOR CRADLE AND BARREL PER DIMENSIONS ON DRAWINGS. IF OPTION B IS CHOSEN FROM NOTE 10 OF THE OUTLET STRUCTURE MATERIAL SPECIFICATIONS, PROCEED TO STEP 3 BELOW.
3. PLACE BARREL PIPE ON CONCRETE BLOCKS TO GRADE. AT THIS STEP, CONTRACTOR SHALL WRAP A DOUBLE LAYER OF NON-WOVEN GEOTEXTILE FABRIC AROUND EACH JOINT OF THE 54"ø O-RING RCP BARREL IN 2' WIDE STRIPS CENTERED ON JOINT.
4. PLACE CONCRETE FOR CRADLE FOR EACH SECTION FROM ONE SIDE OF THE TRENCH. ALLOW CONCRETE TO FILL ENTIRE AREA UNDER PIPE AND PIPE HAUNCHES AS TO LEAVE NO VOIDS UNDER THE PIPE BEFORE PLACING CONCRETE ON THE OPPOSITE SIDE OF THE TRENCH. PLACE ENTIRE CRADLE AS ONE LIFT (VERTICALLY) PER DRAWINGS.
5. ALLOW CRADLE TO CURE FOR A MINIMUM OF 7 DAYS BEFORE ANY VIBRATING COMPACTION EQUIPMENT IS USED IN THE VICINITY OF THE BARREL PIPE.
6. TRENCH TO BE BACKFILLED IN 5" LIFTS WHEN COMPACTION IS BY HAND. BACKFILL IS IN 8" LIFTS WHEN CONDUCTED BY MACHINE. MINIMUM OF 2 FEET COVER MUST BE PRESENT ON 54"ø RCP BEFORE DRIVING OVER WITH HEAVY EQUIPMENT.

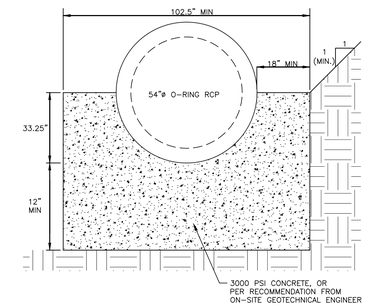

54" CONCRETE CRADLE DETAIL
N.T.S.

NOTES:

1. ALL REINFORCING STEEL IN RISER ANTI-FLOTATION BLOCK TO BE GRADE 40 #4 BARS FOR HORIZONTAL CROSSING AND VERTICAL CONNECTIONS.
2. INSIDE OF RISER BOTTOM TO BE FORMED WITH NON-SHRINK GROUT TO INVERT ELEVATION OF BARREL.
3. ALL PIPE PENETRATIONS THROUGH THE CONCRETE RISER STRUCTURE SHALL BE MADE WATERTIGHT.

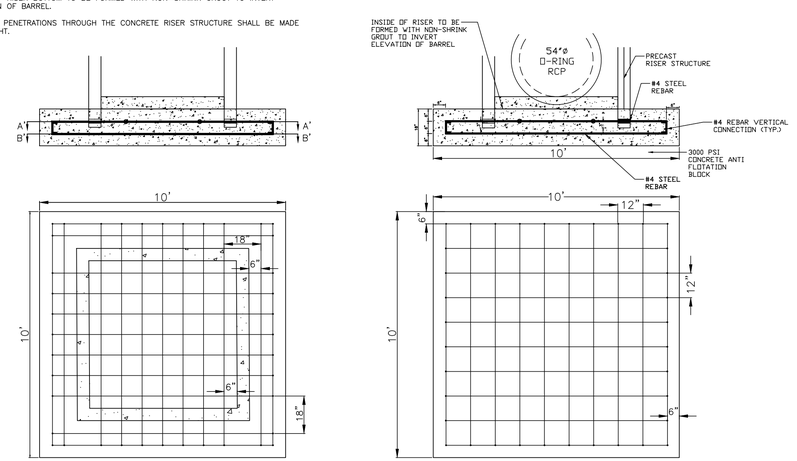

RISER/ANTI-FLOTATION BLOCK CONNECTION
N.T.S.

NOTES:

1. ALL REBAR TO BE #4 REBAR.
2. ALL REBAR AND ANGLES TO BE HOT-DIPPED GALVANIZED AND BE PROVIDED WITH AN EPOXY COATING.
3. THE HOT-DIPPED, GALVANIZED 2"x2"x1/4" ANGLE SHALL BE WELDED TO THE REBAR TRASH RACK. ONCE WELDED, THE ENTIRE ASSEMBLY SHALL BE PLACED ONTO THE RISER WITH ANGLES SITTING DIRECTLY ON TOP OF RISER.
4. TRASH RACK IS TO BE SECURELY FASTENED TO THE SPILLWAY RISER WITH A MINIMUM OF FOUR CORROSION-RESISTANT ANCHORS.
5. ACCESS HATCH SHALL ALIGN WITH STEPS IN RISER.

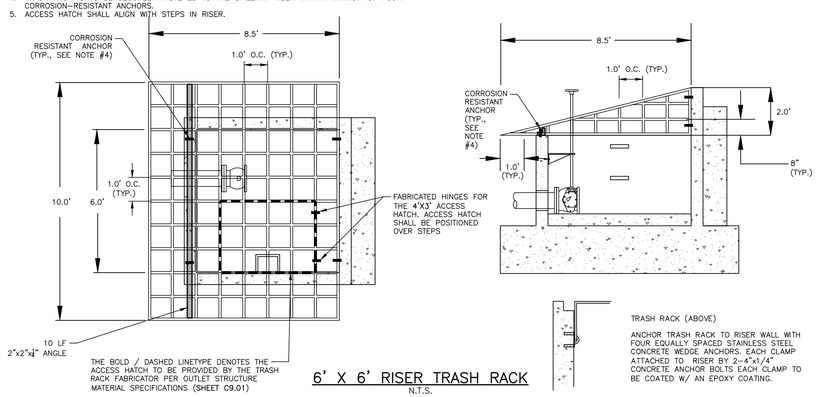

6' X 6' RISER TRASH RACK
N.T.S.

NOTES:

1. RIPRAP TO EXTEND TO TOP OF CHANNEL WITH 2:1 SIDE SLOPES THROUGHOUT THE EXTENT OF CHANNEL.
2. A FILTER BLANKET IS TO BE INSTALLED BETWEEN THE RIPRAP AND SOIL FOUNDATION. THE FILTER BLANKET WILL CONSIST OF A MINIMUM 4" THICK LAYER OF STONE (NCDOT #57) UNDERLAIN WITH MIRAFI FILTER WEAVE 700 OR ENGINEER-APPROVED EQUIVALENT.

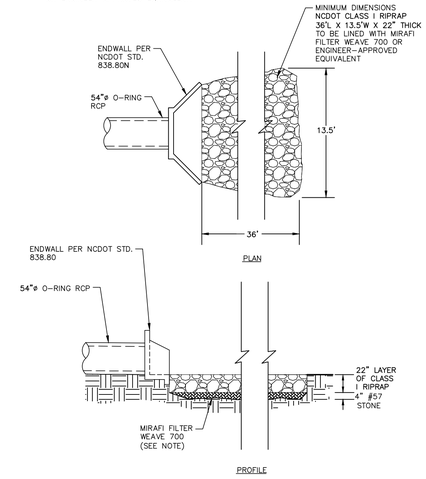

OUTLET BARREL VELOCITY DISSIPATER
N.T.S.

NOTES:

1. ALL REBAR TO BE #4 REBAR.
2. WRAP OUTSIDE OF PIPE WITH VOLCLAY WATERSTOP-RX® 101 (OR PRE-APPROVED EQUIVALENT) AT THE FACE OF THE PRECAST STRUCTURE WALL. PROVIDE 6" OVER LAP ON THE BOTTOM OF THE PIPE.

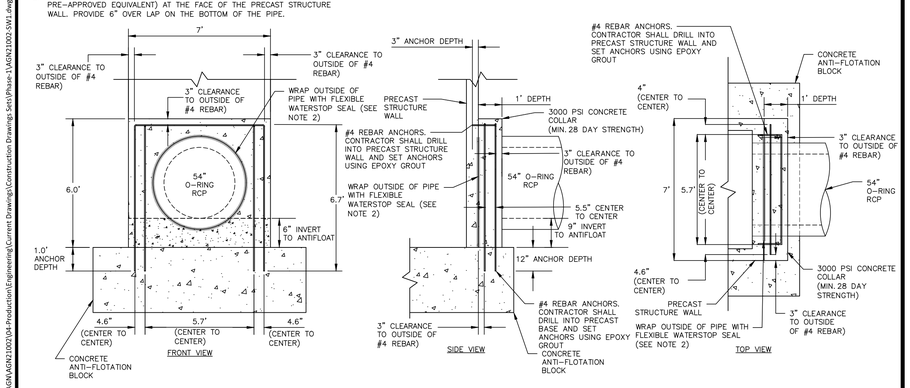

54"ø CONCRETE COLLAR DETAIL
N.T.S.

NOTE:

1. TRUMBULL WALL-TYPE HYDROSTATIC TANK PRESSURE RELIEF VALVES (PRV), OR ENGINEER APPROVED EQUIVALENT, TO BE INSTALLED AT OUTLET OF 4" HDPE PIPES.

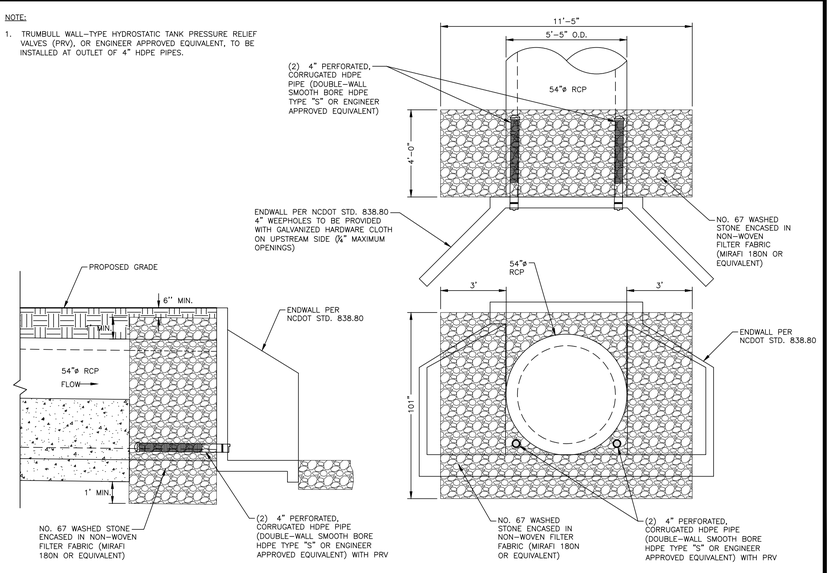

54" SPILLWAY FILTER DETAIL
N.T.S.

SEE SHEET C0.01 FOR ALL PROJECT, SITE, GRADING, STORM DRAINAGE AND UTILITY NOTES

ALL CONSTRUCTION SHALL BE IN ACCORDANCE WITH THE CURRENT TOWN OF KNIGHTDALE, CITY OF RALEIGH PUBLIC UTILITIES, AND NCDOT (WHERE APPLICABLE) ENGINEERING DESIGN AND CONSTRUCTION STANDARDS

Town Certification. This design has been reviewed by the Engineer for the Town of Knightdale, and to the best of my knowledge and belief, it conforms to the requirements established in the Standard Specifications of the Town of Knightdale.
By: _____ Date: _____
Town Engineer
These plans are approved by the Town of Knightdale and serve as construction plans for this project.
By: _____ Date: _____
Administrator

FINAL DRAWING - RELEASED FOR CONSTRUCTION

MCADAMS
The John R. McAdams Company, Inc.
2905 Meridian Parkway
Durham, NC 27713

phone 919. 361. 5000
fax 919. 361. 2269
license number: C-0293, C-187

www.mcadamsco.com

CLIENT

ALLIANCE GROUP OF NC, LLC
7208 FALLS OF NEUSE RD, SUITE 101
RALEIGH, NORTH CAROLINA 27615
JACOB ANDERSON
PHONE: 919. 239. 9486

AGNC

DOWNTOWN NORTH AT KNIGHTDALE STATION
CONSTRUCTION DRAWINGS - PHASE 1
N SMITHFIELD ROAD
KNIGHTDALE, NORTH CAROLINA

NORTH CAROLINA PROFESSIONAL SEAL 47257 ENGINEER CATHERINE E. GANGI
2/6/24

REVISIONS

NO.	DATE	
1	----	----
2	----	----
3	----	----
4	----	----
5	----	----
6	----	----

PLAN INFORMATION

PROJECT NO.	AGN-21002
FILENAME	AGN21002-SW1
CHECKED BY	KEG
DRAWN BY	SDD
SCALE	N.T.S.
DATE	02. 09. 2024

SHEET

SCM "A" DETAILS

C9.02

M:\Projects\AGN\AGN21002\04-Production\Engineering\Current Drawings\Construction Drawings Sets\Phase-1\AGN21002-SW1.dwg, 2/6/2024 1:50:37 PM, Samantha Darnell

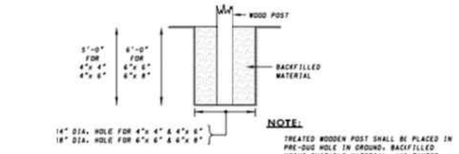

NOTE:
TREATED WOODEN POST SHALL BE PLACED IN PRE-DUG HOLE IN GROUND. BACKFILLED USING SUITABLE MATERIAL, AND TAMPED THOROUGHLY TO PROVIDE A RIGID SUB-SURFACE CONDITION AROUND THE POST.

TYPICAL FOUNDATION FOR WOOD SUPPORTS

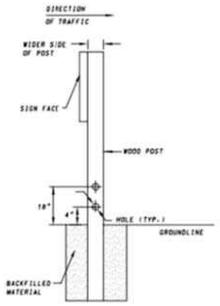

WOOD POST MODIFICATIONS FOR BREAKAWAY FEATURE

POST SIZE	HOLE DIA. (IN.)
4"x 4"	--
4"x 6"	1½
6"x 4"	2
6"x 8"	3

NOTES:
1. ALL WOOD POSTS LARGER THAN 4"x 4" SHALL BE MADE BREAKAWAY BY DRILLING TWO HOLES CENTERED AT 4" AND 18" ABOVE THE GROUNDLINE AND PERPENDICULAR TO THE ROADWAY.
2. ALL SUPPORTS WITHIN THE CLEAR ZONE SHALL BE BREAKAWAY UNLESS PROTECTED.

WOOD POST MODIFICATIONS FOR BREAKAWAY FEATURE

Signs should be installed on 4" x4" (min.) treated wooden post in a conspicuous location.
Signs should have an aluminum backing material
Signs should contain the above symbols as applicable
Signs should always include the following additional information:

- Name of Owner/Party responsible for maintenance
- Owner/Responsible party contact telephone
- Knightdale Stormwater Hotline Telephone: 919-217-2255

Owner/Responsible Party may submit custom signage for approval.
Signs must be properly maintained to ensure all graphics stay legible.

SPEC: 1.02 SCM Identification Sign	Drawing Type: Detail		Drawn: PB	TOWN OF KNIGHTDALE STANDARD DETAILS
Title: Stormwater Control Measure Signage Detail	Scale: N/A	Date: 11-03-2020	Rev: 1.1	

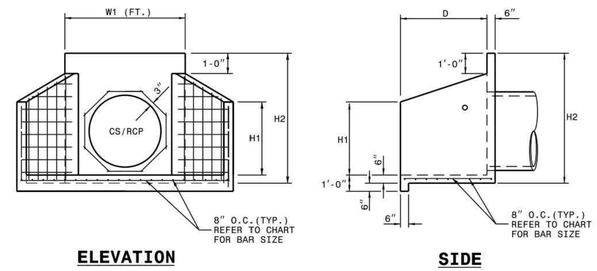

ELEVATION

SIDE

NOTES:

* THIS PRECAST ENDWALL MAY BE USED FOR THE FOLLOWING STANDARDS: 838.01, 838.11, 838.21, 838.27, 838.33, 838.39, 838.51, 838.57, 838.63 AND 838.69.
* INSTALL PRECAST ENDWALLS WITH WINGS AND PAY FOR IN ACCORDANCE WITH SPECIFICATION SECTION 838.
* USE 4000 PSI CONCRETE.
* PROVIDE ALL REINFORCING STEEL WHICH MEETS ASTM A615 FOR GRADE 60 AND WELDED WIRE FABRIC CONFORMING TO ASTM A185 WITH 2" MIN. CLEARANCE.
* PLACE LIFT HOLES OR PINS IN ACCORDANCE WITH OSHA STANDARD 1926.704.
* PIPE TO BE GROUTED INTO HEADWALL AT JOB SITE BY CONTRACTOR
* ALL ELEMENTS PRECAST TO MEET ASTM C913.
* WELDED WIRE FABRIC MAY BE SUBSTITUTED FOR REBAR AS LONG AS THE SAME AREA OF STEEL IS PROVIDED.
* CHAMFER ALL CORNERS 1" OR HAVE A RADIUS OF 1".

NOTE: THE MINIMUM BAR SIZE SHALL BE #5 BARS AT 8" CTS.THE CONTRACTOR WILL HAVE THE OPTION TO INCREASE THIS BAR SIZE AS NEEDED.

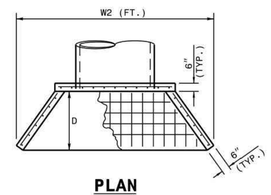

PLAN

ENDWALL DIMENSIONS

FT.	MINIMUM	MIN./MAX.	MIN./MAX.	MIN./MAX.	MIN./MAX.	MIN./MAX.
PIPE DIA.	BAR SIZE	H1(FT.)	H2(FT.)	D (FT.)	W1	W2
1.0	#5 @ 8"	1.25/2.00	2.00/3.75	1.25/1.75	3.00/3.75	5.50/6.00
1.25	#5 @ 8"	1.25/2.00	3.00/3.75	1.25/2.00	3.50/3.75	6.50/6.75
1.50	#5 @ 8"	1.25/2.00	3.00/4.25	1.50/2.50	3.50/3.75	6.50/6.75
2.0	#5 @ 8"	1.50/2.50	4.00/4.75	1.75/2.50	4.00/4.25	7.50/8.25
2.5	#5 @ 8"	2.50/3.50	4.00/6.00	2.00/3.00	4.50/5.50	10.00/11.50
3.0	#5 @ 8"	3.00/3.50	5.00/6.00	2.75/3.50	5.25/5.75	11.50/11.75
3.5	#5 @ 8"	3.25/4.50	6.00/6.75	3.25/3.50	6.00/6.75	12.00/13.25
4.0	#5 @ 8"	3.50/4.50	6.50/7.00	3.25/3.50	6.50/6.75	13.00/13.25
4.5	#5 @ 8"	4.00/5.00	6.50/8.50	3.25/4.00	7.00/9.25	13.50/15.75
5.0	#5 @ 8"	4.50/5.00	7.00/8.50	3.25/4.00	7.25/9.25	13.75/15.75
5.5	#5 @ 8"	4.50/5.00	7.50/8.50	3.25/4.00	7.25/9.25	14.00/15.75
6.0	#5 @ 8"	4.50/5.00	7.50/8.50	3.25/4.00	7.75/9.25	14.75/16.75

STATE OF NORTH CAROLINA
DEPT. OF TRANSPORTATION
DIVISION OF HIGHWAYS
RALEIGH, N.C.
1-18

ROADWAY STANDARD DRAWING FOR
PRECAST CONCRETE ENDWALL
FOR SINGLE 12" THRU 72" PIPE - 90° SKEW

SHEET 1 OF 1
838.80

NOTES:
INSTALL ALL STEPS PROTRUDING 4" FROM INSIDE FACE OF STRUCTURE WALL.
STEPS DIFFERING IN DIMENSIONS, CONFIGURATION, OR MATERIALS FROM THOSE SHOWN MAY ALSO BE USED PROVIDED THE CONTRACTOR HAS FURNISHED THE ENGINEER WITH DETAILS OF THE PROPOSED STEPS AND HAS RECEIVED WRITTEN APPROVAL FROM THE ENGINEER FOR THE USE OF SUCH STEPS.

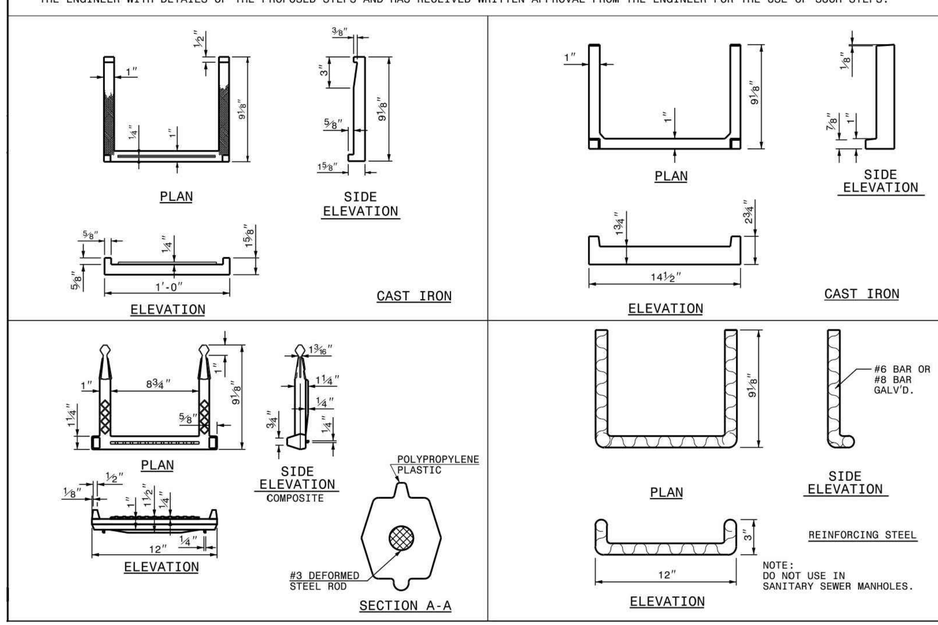

STATE OF NORTH CAROLINA
DEPT. OF TRANSPORTATION
DIVISION OF HIGHWAYS
RALEIGH, N.C.
1-18

ROADWAY STANDARD DRAWING FOR
DRAINAGE STRUCTURE STEPS

SHEET 1 OF 1
840.66

SEE SHEET C0.01 FOR ALL PROJECT, SITE, GRADING, STORM DRAINAGE AND UTILITY NOTES

ALL CONSTRUCTION SHALL BE IN ACCORDANCE WITH THE CURRENT TOWN OF KNIGHTDALE, CITY OF RALEIGH PUBLIC UTILITIES, AND NCDOT (WHERE APPLICABLE) ENGINEERING DESIGN AND CONSTRUCTION STANDARDS

Town Certification. This design has been reviewed by the Engineer for the Town of Knightdale, and to the best of my knowledge and belief, it conforms to the requirements established in the Standard Specifications of the Town of Knightdale.
By: _____ Date: _____
Town Engineer
These plans are approved by the Town of Knightdale and serve as construction plans for this project.
By: _____ Date: _____
Administrator

FINAL DRAWING - RELEASED FOR CONSTRUCTION

MCADAMS
The John R. McAdams Company, Inc.
2905 Meridian Parkway
Durham, NC 27713

phone 919. 361. 5000
fax 919. 361. 2269
license number: C-0293, C-187

www.mcadamsco.com

CLIENT

ALLIANCE GROUP OF NC, LLC
7208 FALLS OF NEUSE RD, SUITE 101
RALEIGH, NORTH CAROLINA 27615
JACOB ANDERSON
PHONE: 919. 239. 9486

AGNC

DOWNTOWN NORTH AT KNIGHTDALE STATION
CONSTRUCTION DRAWINGS - PHASE 1
N SMITHFIELD ROAD
KNIGHTDALE, NORTH CAROLINA

NORTH CAROLINA PROFESSIONAL SEAL 47257 ENGINEER KATHERINE E. GARCIA
2/6/24

REVISIONS

NO.	DATE	
1	----	----
2	----	----
3	----	----
4	----	----
5	----	----
6	----	----

PLAN INFORMATION

PROJECT NO.	AGN-21002
FILENAME	AGN21002-SW1
CHECKED BY	KEG
DRAWN BY	SDD
SCALE	N.T.S.
DATE	02. 09. 2024

SHEET

SCM "A" DETAILS

C9.03

M:\Projects\AGN\AGN21002\04-Production\Engineering\Current Drawings\Construction Drawings Sets\Phase-1\AGN21002-SW1.dwg, 2/6/2024 1:50:43 PM, Samantha Danell

PLANT SCHEDULE SCM 'A'

GROUND COVERS	CODE	QTY	COMMON NAME	BOTANICAL NAME	CONT	SPACING
	AISM	261	Swamp Milkweed Shallow Water	Asclepias incarnata	4" pot	24" o.c.
	CTQS	230	Quill Sedge Shallow Water	Carex tenera	4" pot	24" o.c.
	LCCF	463	Cardinal Flower Shallow Land	Lobelia cardinalis	4" pot	24" o.c.
	LELL	299	Longleaf Lobelia Shallow Land	Lobelia elongata	4" pot	24" o.c.
	RWWS	355	White-topped Sedge Shallow Water	Rhynchospora colorata	4" pot	24" o.c.
	STSB	389	Softstem Bulrush Shallow Land	Schoenoplectus tabernaemontani	4" pot	24" o.c.

NOTE: SEED EMBANKMENTS PER PERMANENT SEEDING SCHEDULE BELOW.

SEEDBED PREPARATION

1. CHISEL COMPACTED AREAS AND SPREAD TOPSOIL 3-4 INCHES DEEP OVER ADVERSE SOIL CONDITIONS. TOPSOIL SHOULD BE INCORPORATED INTO THE FINAL GRADING OF THE BASIN SIDE SLOPES AND AQUATIC SHELF. CONTRACTOR SHOULD SCARIFY THE TOP 3-4 INCHES OF THE COMPACTED FILL TO PROMOTE BONDING WITH TOPSOIL.
2. RIP THE ENTIRE AREA TO 6 INCHES DEPTH.
3. REMOVE ALL LOOSE ROCK, ROOTS, AND OTHER OBSTRUCTIONS LEAVING SURFACE REASONABLY SMOOTH AND UNIFORM.
4. PER ONE TIME ONLY, APPLY AGRICULTURAL LIME, FERTILIZER, AND SUPERPHOSPHATE UNIFORMLY AND MIX WITH SOIL.
5. CONTINUE TILLAGE UNTIL A WELL-PULVERIZED, FIRM REASONABLY UNIFORM SEEDBED IS PREPARED 4 TO 6 INCHES DEEP.
6. SEED ON A FRESHLY PREPARED SEEDBED AND COVER.
7. MULCH IMMEDIATELY AFTER SEEDING AND ANCHOR MULCH.
8. INSPECT ALL SEEDED AREAS AND MAKE NECESSARY REPAIRS OR RESEEDINGS WITHIN THE PLANTING SEASON, IF POSSIBLE. AFTER PERMANENT COVER IS ESTABLISHED.
9. CONSULT CONSERVATION INSPECTOR ON MAINTENANCE TREATMENT.

TEMPORARY SEEDING SCHEDULE

SEEDING DATE	SEEDING MIXTURE	APPLICATION RATE
JAN 1 - MAY 1	RYE (GRAIN)	120 LBS/AC
	KOBE LESPEDEZA	50 LBS/AC
MAY 1 - AUG 15	GERMAN MILLET	40 LBS/AC
AUG 15 - DEC 30	RYE (GRAIN)	120 LBS/AC

SOIL AMENDMENTS
FOLLOW RECOMMENDATIONS OF SOIL TESTS OR APPLY 2,000 LB/AC GROUND AGRICULTURE LIMESTONE AND 750 LB/AC 10-10-10 FERTILIZER (FROM AUG 15 - DEC 30, INCREASE 10-10-10 FERTILIZER TO 1000 LB/AC).

MULCH
APPLY 4000 LB/AC STRAW. ANCHOR STRAW BY TACKING WITH ASPHALT, NETTING, OR A MULCH ANCHORING TOOL. A DISK WITH BLADES SET NEARLY STRAIGHT CAN BE USED AS A MULCH ANCHORING TOOL.

MAINTENANCE
JAN 1 - AUG 15: REFERTILIZE IF GROWTH IS NOT FULLY ADEQUATE. RESEED, REFERTILIZE, AND MULCH IMMEDIATELY FOLLOWING EROSION OR OTHER DAMAGE.

AUG 15 - DEC 30: REPAIR AND REFERTILIZE DAMAGED AREAS IMMEDIATELY. TOP DRESS WITH 50 LB/AC OF NITROGEN IN MARCH. IF IT IS NECESSARY TO EXTEND TEMPORARY COVER BEYOND JUNE 15, OVERSEED WITH 50 LB/AC KOBE LESPEDEZA IN LATE FEBRUARY OR EARLY MARCH.

NOTE: USE THE TEMPORARY SEEDING SCHEDULE ONLY WHEN DATE IS NOT CORRECT TO USE THE PERMANENT SEEDING SCHEDULE.

PERMANENT SEEDING SCHEDULE (DAM EMBANKMENTS)

SEEDING DATE	SEEDING MIXTURE OPTIONS (CHOOSE ONE)	APPLICATION RATE
MARCH 1 - JUNE 31	HYBRID BERMUDA GRASS	1 LBS/1,000 SF (OR MANUFACTURER SPECIFICATIONS)
SEPT 1 - OCT 31		1 LBS/1,000 SF (OR MANUFACTURER SPECIFICATIONS)

SOIL AMENDMENTS
FOLLOW RECOMMENDATIONS OF SOIL TESTS OR APPLY 4,000 LB/AC GROUND AGRICULTURE LIMESTONE AND 1000 LB/AC 10-10-10 FERTILIZER.

MULCH
APPLY 4000 LB/AC STRAW. ANCHOR STRAW BY TACKING WITH ASPHALT, NETTING, OR A MULCH ANCHORING TOOL. A DISK WITH BLADES SET NEARLY STRAIGHT CAN BE USED AS A MULCH ANCHORING TOOL.

MAINTENANCE
INSPECT AND REPAIR MULCH FREQUENTLY. REFERTILIZE IN LATE WINTER OF THE FOLLOWING YEAR; USE SOIL TESTS OR APPLY 150 LB/AC 10-10-10 FERTILIZER. MOW REGULARLY TO A HEIGHT OF 2-4 INCHES.

NOTE: PERMANENT SEEDING SCHEDULE IS FOR SLOPES OF THE BASIN AND TOP OF BERM. SEE REQUIRED TOWN OF KINIGHTDALE SCM BASIN REMOVAL SEQUENCE NOTE 13 ON SHEET C9.00 FOR PERMANENT SEEDING CONSTRUCTION SEQUENCE.

PERMANENT SEEDING AREA

PLANTING INSTRUCTIONS

PLANTING TECHNIQUES
A. ENSURE THAT ROOTS, ONCE REMOVED FROM POT, ARE STRAIGHTENED AND FACE DOWNWARD.
B. CREATE PLANTING AREA FOR EACH PLANT AND EXCAVATE PIT.
C. PLACE PLANTS IN PIT, ENSURING ROOTS ARE FACING COMPLETELY DOWNWARD.
D. HEEL IN SOIL AROUND PLANT AND PROCEED TO NEXT PLANTING LOCATION.
E. NEWLY PLANTED PLANTS NEED TO BE FASTENED TO THE SUBSTRATE FOR THE ESTABLISHMENT OF NEW ROOTS.
F. ROOTS SHALL BE SPREAD IN THEIR NORMAL POSITION. ALL BROKEN OR FRAYED ROOTS SHALL BE CUT OFF CLEANLY.
G. THE DIAMETER OF THE PITS FOR ALL VEGETATIVE STOCK SHALL BE AT LEAST THREE TIMES THE DIAMETER OF THE ROOT MASS. PLANT PIT WALL SHALL BE SCARIFIED PRIOR TO PLANT INSTALLATION.
H. SET THE PLANTS UPRIGHT, IN THE CENTER OF THE PIT. THE BOTTOM OF THE ROOT MASS SHOULD BE RESTING ON UNDISTURBED SOIL.
I. PLACE THE BACKFILL AROUND THE BASE AND SIDES OF THE ROOT MASS, AND WORK EACH LAYER TO SETTLE BACKFILL AND TO ELIMINATE VOIDS AND AIR POCKETS. WHEN PIT IS APPROXIMATELY 2/3 FULL, WATER THOROUGHLY BEFORE PLACING REMAINDER OF THE BACKFILL. WATER AGAIN AFTER PLACING FINAL LAYER OF BACKFILL.
J. BROKEN OR DAMAGED PARTS WILL BE CUT BACK TO UNDAMAGED TISSUE, LEAVING AS MUCH GREEN BASAL TISSUE AS POSSIBLE ABOVE THE ROOTS. IF MORE THAN FIFTY PERCENT (50%) OF THE PLANT IS DAMAGED THEN CONTRACTOR SHALL REPLACE THE PLANT.

CONTAINER STOCK / BARE ROOT
A. STOCK SHALL HAVE BEEN GROWN IN A CONTAINER LONG ENOUGH FOR THE ROOT SYSTEM TO HAVE DEVELOPED SUFFICIENTLY TO HOLD ITS SOIL TOGETHER ONCE REMOVED FROM THE CONTAINER.
B. CONTAINER PLANTS WILL NEED TO BE WATERED REGULARLY AND PLACED IN SHADY CONDITIONS UNTIL PLANTING OCCURS.
C. BARE ROOT PLANTS ARE FOR IMMEDIATE PLANTING, OTHERWISE SEE D) BELOW.
D. IF BARE ROOTS SPECIMENS ARE NOT TO BE PLANTED WITHIN FOUR (4) DAYS, TEMPORARY HOLDING OF BARE ROOT SPECIMENS ARE TO BE COVERED ENTIRELY BY A SUITABLE MEDIUM (ETC. SOIL, SAWDUST, MULCH OR THE LIKE) AND WATERED REGULARLY SO AS TO NOT DRY OUT.

PLANT LOCATIONS
A. NEW PLANTINGS SHALL BE LOCATED WHERE SHOWN ON PLAN EXCEPT WHERE CHANGES HAVE BEEN MADE IN PROPOSED CONSTRUCTION.
B. NECESSARY ADJUSTMENTS SHALL BE MADE ONLY AFTER APPROVAL BY THE OWNER OR THE OWNER'S REPRESENTATIVE.

WATER
WATER SHALL BE POTABLE AND SHALL NOT CONTAIN ELEMENTS TOXIC TO PLANT LIFE.

PLANTING SCHEDULE

1. ONCE THE GRADING IS COMPLETE, THE CONTRACTOR SHALL REQUEST AN ON-SITE INSPECTION AND AN AS-BUILT SURVEY PRIOR TO INSTALLATION OF THE STORMWATER MANAGEMENT FACILITY PLANTS. IF THE CONTRACTOR PLANTS THE PROPOSED VEGETATION PRIOR TO AN AS-BUILT SURVEY (AND SUBSEQUENT APPROVAL), ANY CHANGES TO THE GRADING / RE-PLANTING OF PLANTS WILL BE AT THE CONTRACTOR'S EXPENSE.
2. ONCE THE ENGINEER HAS APPROVED THE AS-BUILT GRADING, THE CONTRACTOR SHALL PLANT THE PROPOSED STORMWATER MANAGEMENT FACILITY PLANTS SHOWN ON THE LANDSCAPE PLAN FOR THE FACILITY. AFTER COMPLETION OF THE PLANTING, THE LANDSCAPE CONTRACTOR SHALL PROVIDE A LETTER TO THE ENGINEER CERTIFYING THAT THE PLANTS HAVE BEEN INSTALLED PER THE APPROVED STORMWATER MANAGEMENT FACILITY PLANTING PLAN. 90% GERMINATION REQUIRED OF NON-CLUMPING TURF GRASS PRIOR TO FINAL CERTIFICATION.
3. OPTIMAL PLANTING PERIODS RANGE APPROXIMATELY FROM APRIL 15TH THRU JUNE 30TH AND SEPTEMBER 1ST THRU OCTOBER 31ST. FOR FINAL DETERMINATION OF THE SITE'S PLANTING PERIOD, THE CONTRACTOR SHALL COORDINATE WITH A LANDSCAPE PROFESSIONAL REGARDING SCHEDULING FOR PLANT INSTALLATION.
4. IT IS RECOMMENDED THAT THE CONTRACTOR TAKE MEASURES TO PREVENT WILDLIFE FROM DAMAGING OR CONSUMING WETLAND PLANTINGS.

TOWN OF KNIGHTDALE SCM PLANTING NOTES

1. THE DAM STRUCTURE, INCLUDING FRONT AND BACK EMBANKMENT SLOPES, OF THE POND SHALL BE VEGETATED WITH NON-CLUMPING TURF GRASS OR SOD. (CENTIPEDE/HYBRID-BERMUDA) 90% GERMINATION OF NON-CLUMPING TURF WILL BE REQUIRED PRIOR TO FINAL CERTIFICATION FORM THE TOWN.
2. THE VEGETATED SHELF SHALL BE PLANTED WITH A MINIMUM OF THREE DIVERSE SPECIES OF HERBACEOUS, NATIVE VEGETATION AT A MINIMUM DENSITY OF 50 PLANTS PER 200 FEET OF SHELF AREA.
3. CONTRACTOR TO WORK WITH SOILS SCIENTIST TO ENSURE SOILS ARE ADEQUATE TO SUPPORT PROPER ESTABLISHMENT AND GROWTH OF THE AQUATIC PLANTINGS. CONTRACTOR TO AMEND SOILS AND INSTALL SOILS IN PLANT, SHRUB, AND TREE AREAS PER DETAILS, SOIL SPECIFICATIONS. NCDENR SPECIFICATION, AND SOIL SCIENTIST RECOMMENDATIONS.
4. ALL AQUATIC PLANTINGS ARE TO BE INSTALLED DURING THE APPROPRIATE TIME OF YEAR TO ENSURE SURVIVABILITY. (LAST SPRING FROST AND THE FIRST FALL FROST)
5. ALL DISTURBED AREAS AROUND THE OUTSIDE OF THE DEVICE SHALL BE SEEDED WITH A LAWN AREA SEED MIX (PER SEEDING SPECIFICATIONS) NATIVE GRASSES, LEGUMES, CLOVERS, AND WILDFLOWERS.
6. IF THE DEVICE WAS USED DURING CONSTRUCTION AS A SEDIMENT BASIN OR TRAP, THE BASIN MUST BE CLEANED OUT, GRADED, APPROPRIATE AREAS COVERED WITH 4" OF TOPSOIL AS SPECIFIED IN NOTE #2 ABOVE, AND VEGETATED WITHIN 14 DAYS OF THE COMPLETION OF CONSTRUCTION.
7. CONTRACTOR SHALL WATER ALL VEGETATION AND GRASS ON A WEEKLY BASIS AS NEEDED TO ENSURE GRASS AND PLANT SURVIVAL UNTIL AFTER THE SCM IS CERTIFIED AND ACCEPTED BY THE TOWN.

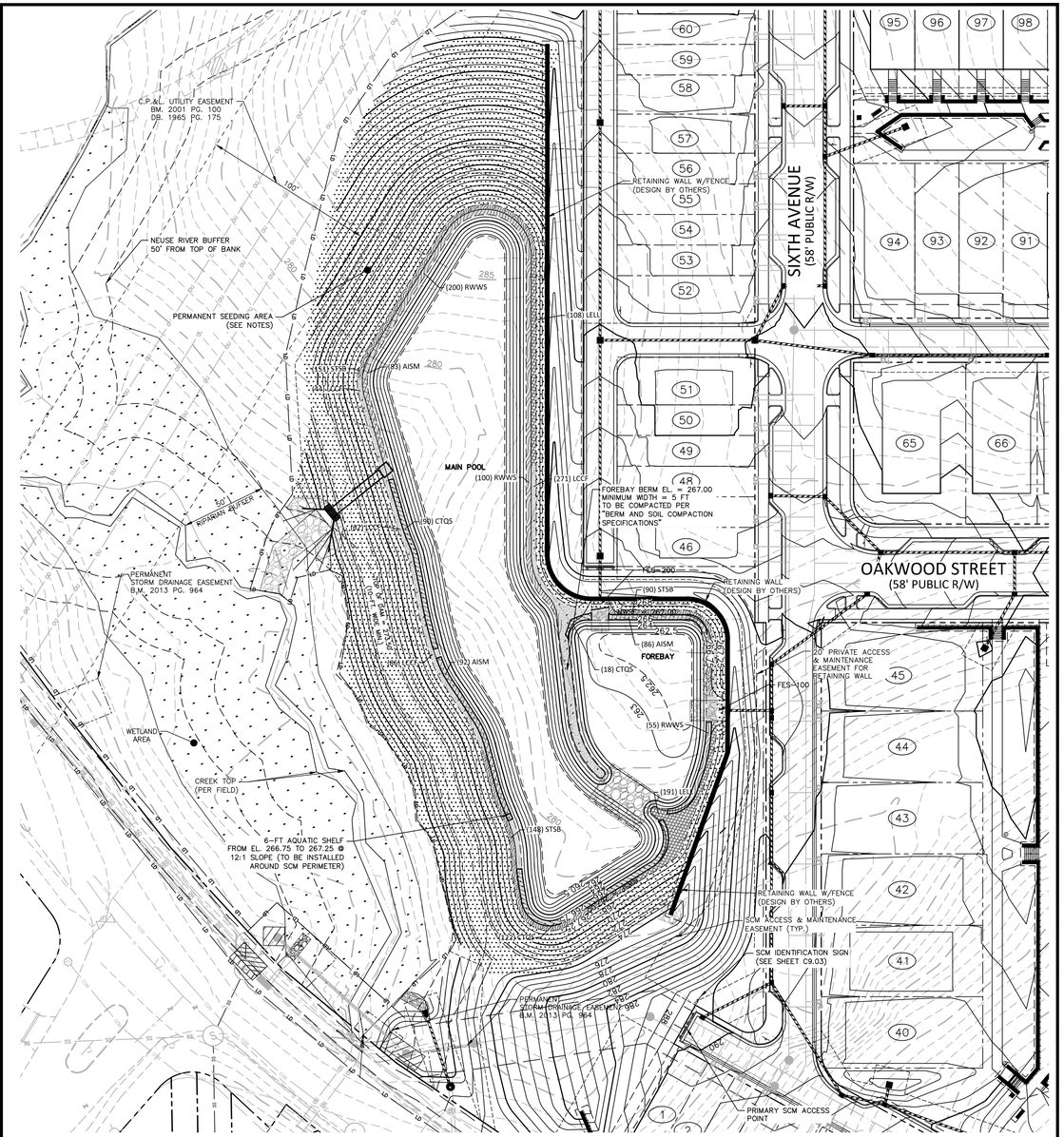

STORMWATER CONTROL MEASURE 'A' LANDSCAPE PLAN

1" = 40'

SEE SHEET C0.01 FOR ALL PROJECT, SITE, GRADING, STORM DRAINAGE AND UTILITY NOTES

ALL CONSTRUCTION SHALL BE IN ACCORDANCE WITH THE CURRENT TOWN OF KNIGHTDALE, CITY OF RALEIGH PUBLIC UTILITIES, AND NCDOT (WHERE APPLICABLE) ENGINEERING DESIGN AND CONSTRUCTION STANDARDS

GRAPHIC SCALE
0 20 40 80
1 inch = 40 ft.

Town Certification. This design has been reviewed by the Engineer for the Town of Knightdale, and to the best of my knowledge and belief, it conforms to the requirements established in the Standard Specifications of the Town of Knightdale.
By: _____ Date: _____
Town Engineer
These plans are approved by the Town of Knightdale and serve as construction plans for this project.
By: _____ Date: _____
Administrator

FINAL DRAWING - RELEASED FOR CONSTRUCTION

MCADAMS
The John R. McAdams Company, Inc.
2905 Meridian Parkway
Durham, NC 27713

phone 919. 361. 5000
fax 919. 361. 2269
license number: C-0293, C-187

www.mcadamsco.com

CLIENT

ALLIANCE GROUP OF NC, LLC
7208 FALLS OF NEUSE RD, SUITE 101
RALEIGH, NORTH CAROLINA 27615
JACOB ANDERSON
PHONE: 919. 239. 9486

AGNC

DOWNTOWN NORTH AT KNIGHTDALE STATION
CONSTRUCTION DRAWINGS - PHASE 1
N SMITHFIELD ROAD
KNIGHTDALE, NORTH CAROLINA

NORTH CAROLINA PROFESSIONAL SEAL 47257 ENGINEER KATHERINE E. GARCIA
2/6/24

REVISIONS

NO.	DATE	
1	----	----
2	----	----
3	----	----
4	----	----
5	----	----
6	----	----

PLAN INFORMATION

PROJECT NO.	AGN-21002
FILENAME	AGN21002-SW1
CHECKED BY	KEG
DRAWN BY	SDD
SCALE	1" = 40'
DATE	02. 09. 2024

SHEET

SCM ''A'' LANDSCAPE PLAN

C9.04

M:\Projects\AGN\AGN21002\04-Production\Engineering\Current Drawings\Construction Drawings Sets\Phase-1\AGN21002-SW1.dwg, 2/6/2024 3:13:49 PM, Samantha Danell

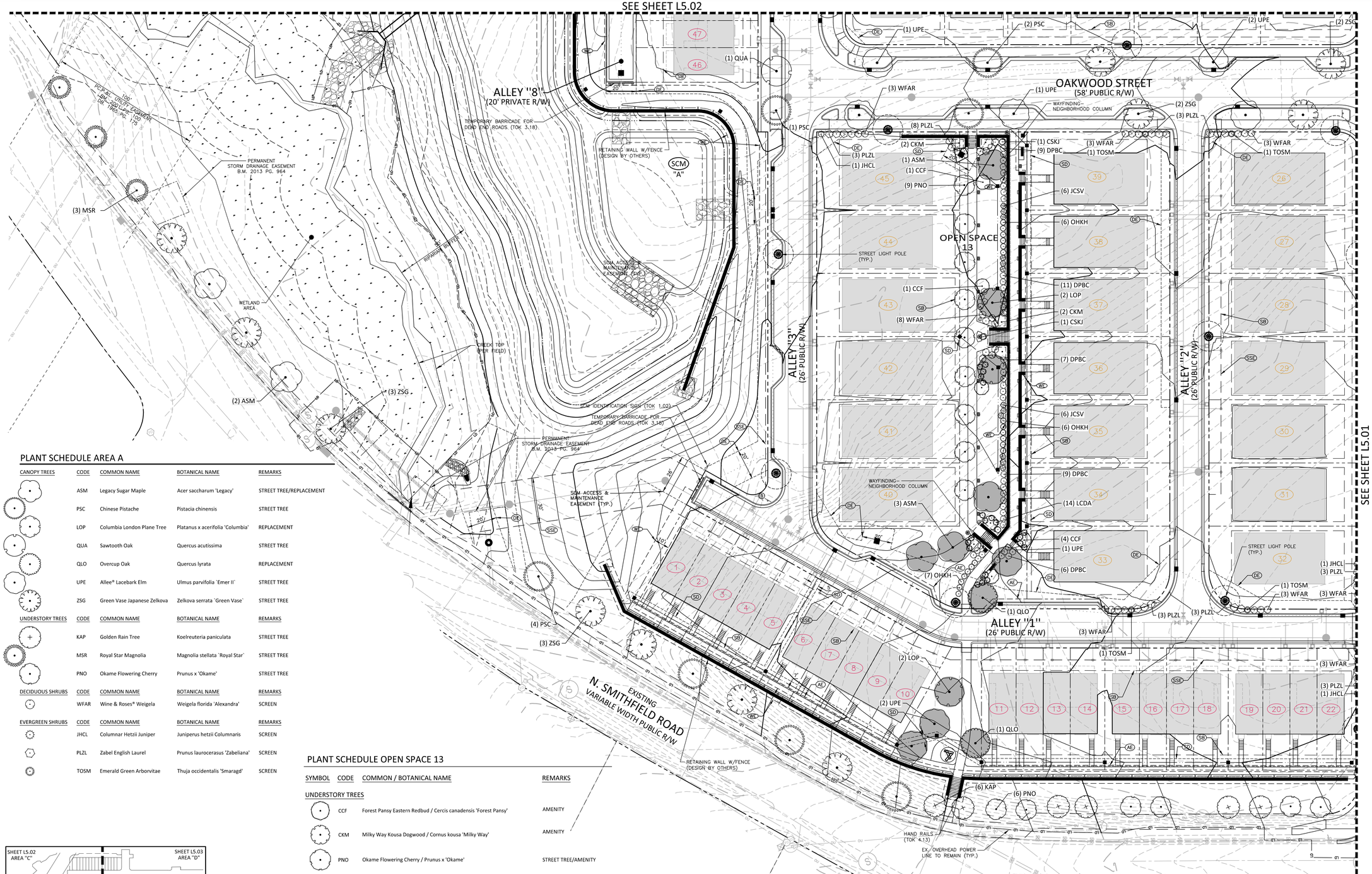

PLANT SCHEDULE AREA A

CANOPY TREES	CODE	COMMON NAME	BOTANICAL NAME	REMARKS
	ASM	Legacy Sugar Maple	Acer saccharum 'Legacy'	STREET TREE/REPLACEMENT
	PSC	Chinese Pistache	Pistacia chinensis	STREET TREE
	LOP	Columbia London Plane Tree	Platanus x acerifolia 'Columbia'	REPLACEMENT
	QUA	Sawtooth Oak	Quercus acutissima	STREET TREE
	QLO	Overcup Oak	Quercus lyrata	REPLACEMENT
	UPE	Allee® Lacebark Elm	Ulmus parvifolia `Emer II'	STREET TREE
	ZSG	Green Vase Japanese Zelkova	Zelkova serrata `Green Vase`	STREET TREE
UNDERSTORY TREES	**CODE**	**COMMON NAME**	**BOTANICAL NAME**	**REMARKS**
	KAP	Golden Rain Tree	Koelreuteria paniculata	STREET TREE
	MSR	Royal Star Magnolia	Magnolia stellata `Royal Star`	STREET TREE
	PNO	Okame Flowering Cherry	Prunus x 'Okame'	STREET TREE
DECIDUOUS SHRUBS	**CODE**	**COMMON NAME**	**BOTANICAL NAME**	**REMARKS**
	WFAR	Wine & Roses® Weigela	Weigela florida 'Alexandra'	SCREEN
EVERGREEN SHRUBS	**CODE**	**COMMON NAME**	**BOTANICAL NAME**	**REMARKS**
	JHCL	Columnar Hetzii Juniper	Juniperus hetzii Columnaris	SCREEN
	PLZL	Zabel English Laurel	Prunus laurocerasus 'Zabeliana'	SCREEN
	TOSM	Emerald Green Arborvitae	Thuja occidentalis 'Smaragd'	SCREEN

PLANT SCHEDULE OPEN SPACE 13

SYMBOL	CODE	COMMON / BOTANICAL NAME	REMARKS
UNDERSTORY TREES			
	CCF	Forest Pansy Eastern Redbud / Cercis canadensis 'Forest Pansy'	AMENITY
	CKM	Milky Way Kousa Dogwood / Cornus kousa 'Milky Way'	AMENITY
	PNO	Okame Flowering Cherry / Prunus x 'Okame'	STREET TREE/AMENITY
DECIDUOUS SHRUBS			
	WFAR	Wine & Roses® Weigela / Weigela florida 'Alexandra'	SCREEN/AMENITY
EVERGREEN SHRUBS			
	CSKJ	Kanjiro Camellia / Camellia sasanqua 'Kanjiro'	SCREEN/AMENITY
	DPBC	Blue Cascade® Distylium / Distylium x 'PIIDIST-II'	AMENITY
	JCSV	Green Sargent Juniper / Juniperus chinensis sargentii 'Viridis'	AMENITY
	LCDA	Daruma Loropetalum / Loropetalum chinense DARUMA	AMENITY
	OHKH	Fragrant Princess Dwarf Holly Olive / Osmanthus heterophyllus 'Kaori Hime'	AMENITY
	PLZL	Zabel English Laurel / Prunus laurocerasus 'Zabeliana'	SCREEN/AMENITY

EASEMENT LEGEND

- (DE) STORM DRAINAGE EASEMENT
- (UE) CITY OF RALEIGH WATERLINE EASEMENT
- (SSE) CITY OF RALEIGH SANITARY SEWER EASEMENT
- (AE) PUBLIC ACCESS EASEMENT

LEGEND

- (SCM) STORMWATER CONTROL MEASURE

LIGHTING LEGEND

KEY	FIXTURE
	POLE MOUNTED PEDESTRIAN
	WALL MOUNTED PATHWAY
	GROUND MOUNTED PATHWAY

*FOR FIXTURE MODEL/TYPE (SEE DETAILS SHEET L5.06)

TIER 3 TREE REPLACEMENT (SEE CALCULATIONS SHEET L5.04)

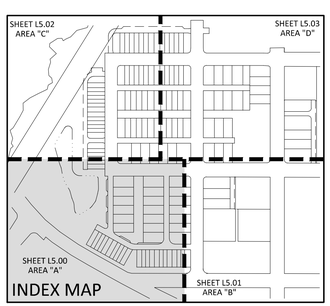

GRAPHIC SCALE
0 15 30 60
1 inch = 30 ft.

Town Certification. This design has been reviewed by the Engineer for the Town of Knightdale, and to the best of my knowledge and belief, it conforms to the requirements established in the Standard Specifications of the Town of Knightdale.
By: _____ Date: _____
Town Engineer
These plans are approved by the Town of Knightdale and serve as construction plans for this project.
By: _____ Date: _____
Administrator

FINAL DRAWING - RELEASED FOR CONSTRUCTION

MCADAMS
The John R. McAdams Company, Inc.
2905 Meridian Parkway
Durham, NC 27713

phone 919. 361. 5000
fax 919. 361. 2269
license number: C-0293, C-187

www.mcadamsco.com

CLIENT

ALLIANCE GROUP OF NC, LLC
7208 FALLS OF NEUSE RD, SUITE 101
RALEIGH, NORTH CAROLINA 27615
JACOB ANDERSON
PHONE: 919. 239. 9486

AGNC

DOWNTOWN NORTH AT KNIGHTDALE STATION
CONSTRUCTION DRAWINGS - PHASE 1
N SMITHFIELD ROAD
KNIGHTDALE, NORTH CAROLINA

MARK D. SHAW
1051
MARK D. SHAW

REVISIONS

NO.	DATE	
1	----	----
2	----	----
3	----	----
4	----	----
5	----	----
6	----	----

PLAN INFORMATION

PROJECT NO.	AGN-21002
FILENAME	AGN21002-LS1
CHECKED BY	XXX
DRAWN BY	XXX
SCALE	1" = 30'
DATE	02. 16. 2024

SHEET

LANDSCAPE PLAN - AREA "A"

L5.00

M:\Projects\AGN\AGN21002\04-Production\Engineering\Current Drawings\Construction Drawings Sets\Phase-1\AGN21002-LS1.dwg, 2/19/2024 4:46:46 PM, Mark Shawl

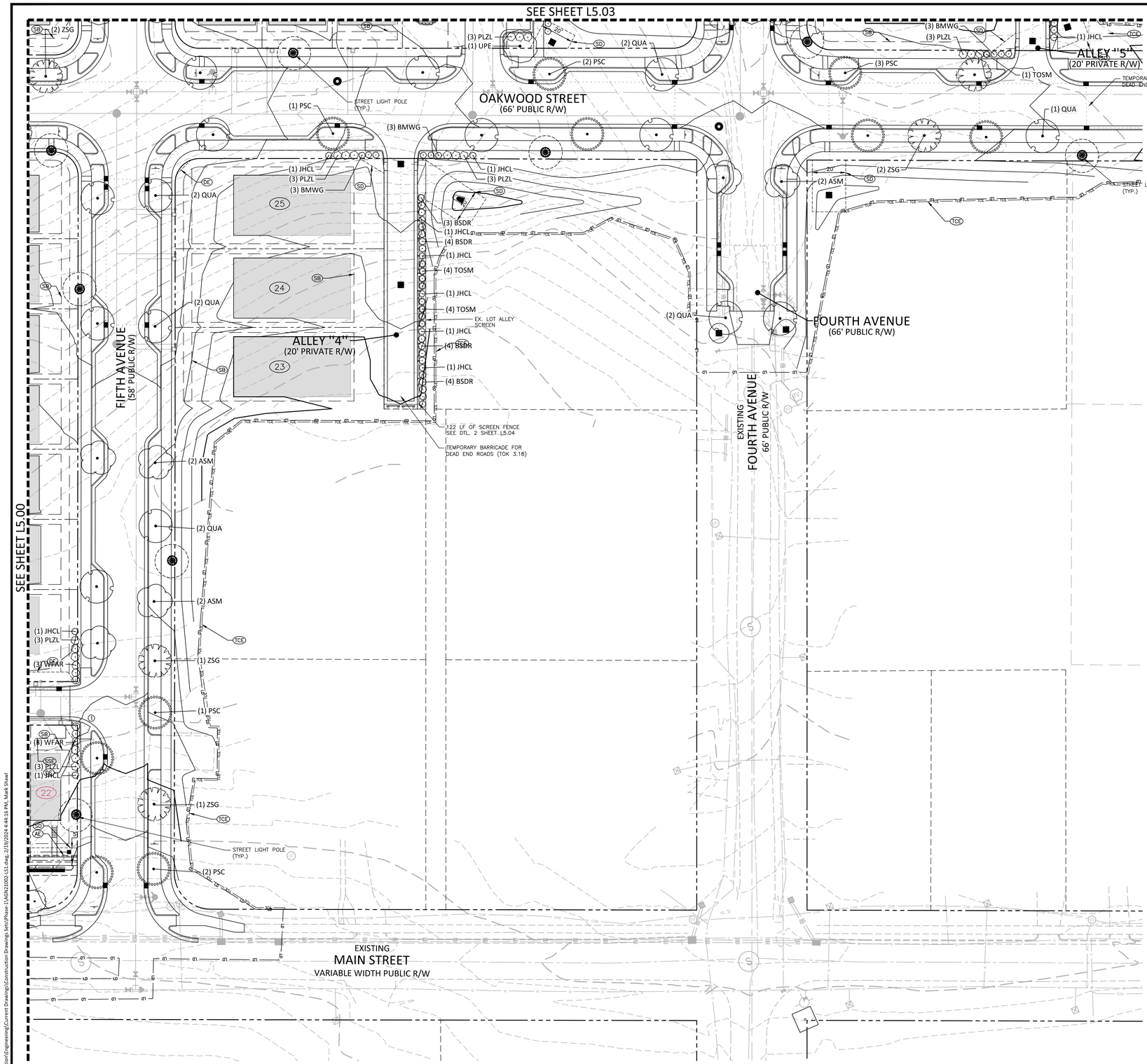

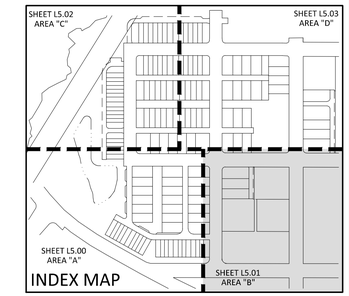

EASEMENT LEGEND

- DE — STORM DRAINAGE EASEMENT
- UE — CITY OF RALEIGH WATERLINE EASEMENT
- SSE — CITY OF RALEIGH SANITARY SEWER EASEMENT
- AE — PUBLIC ACCESS EASEMENT

PLANT SCHEDULE AREA B

CANOPY TREES	CODE	COMMON NAME	BOTANICAL NAME	REMARKS
	ASM	Legacy Sugar Maple	Acer saccharum 'Legacy'	STREET TREE/REPLACEMENT
	PSC	Chinese Pistache	Pistacia chinensis	STREET TREE
	QUA	Sawtooth Oak	Quercus acutissima	STREET TREE
	UPE	Allee® Lacebark Elm	Ulmus parvifolia `Emer II`	STREET TREE
	ZSG	Green Vase Japanese Zelkova	Zelkova serrata `Green Vase`	STREET TREE
DECIDUOUS SHRUBS	**CODE**	**COMMON NAME**	**BOTANICAL NAME**	**REMARKS**
	WFAR	Wine & Roses® Weigela	Weigela florida 'Alexandra'	SCREEN
EVERGREEN SHRUBS	**CODE**	**COMMON NAME**	**BOTANICAL NAME**	**REMARKS**
	BMWG	Winter Gem Japanese Boxwood	Buxus microphylla japonica 'Winter Gem'	SCREEN
	BSDR	Dee Runk Common Boxwood	Buxus sempervirens 'Dee Runk'	SCREEN
	JHCL	Columnar Hetzii Juniper	Juniperus hetzii Columnaris	SCREEN
	PLZL	Zabel English Laurel	Prunus laurocerasus 'Zabeliana'	SCREEN
	TOSM	Emerald Green Arborvitae	Thuja occidentalis 'Smaragd'	SCREEN

TIER 3 TREE REPLACEMENT (SEE CALCULATIONS SHEET L5.04)

GRAPHIC SCALE
0 15 30 60
1 inch = 30 ft.

Town Certification. This design has been reviewed by the Engineer for the Town of Knightdale, and to the best of my knowledge and belief, it conforms to the requirements established in the Standard Specifications of the Town of Knightdale.
By: _____ Date: _____
Town Engineer
These plans are approved by the Town of Knightdale and serve as construction plans for this project.
By: _____ Date: _____
Administrator

FINAL DRAWING - RELEASED FOR CONSTRUCTION

MCADAMS
The John R. McAdams Company, Inc.
2905 Meridian Parkway
Durham, NC 27713

phone 919. 361. 5000
fax 919. 361. 2269
license number: C-0293, C-187

www.mcadamsco.com

CLIENT

ALLIANCE GROUP OF NC, LLC
7208 FALLS OF NEUSE RD, SUITE 101
RALEIGH, NORTH CAROLINA 27615
JACOB ANDERSON
PHONE: 919. 239. 9486

AGNC

DOWNTOWN NORTH AT KNIGHTDALE STATION
CONSTRUCTION DRAWINGS - PHASE 1
N SMITHFIELD ROAD
KNIGHTDALE, NORTH CAROLINA

NORTH CAROLINA PROFESSIONAL ENGINEER SEAL 19511 MARK D. SHAW

REVISIONS

NO.	DATE	
1	----	----
2	----	----
3	----	----
4	----	----
5	----	----
6	----	----

PLAN INFORMATION

PROJECT NO.	AGN-21002
FILENAME	AGN21002-LS1
CHECKED BY	XXX
DRAWN BY	XXX
SCALE	1" = 30'
DATE	02. 16. 2024

SHEET

LANDSCAPE PLAN - AREA "B"

L5.01

M:\Projects\AGN\AGN21002\04-Production\Engineering\Current Drawings\Construction Drawings Sets\Phase-1\AGN21002-LS1.dwg, 2/19/2024 4:44:16 PM, Mark Shaw

INSET A

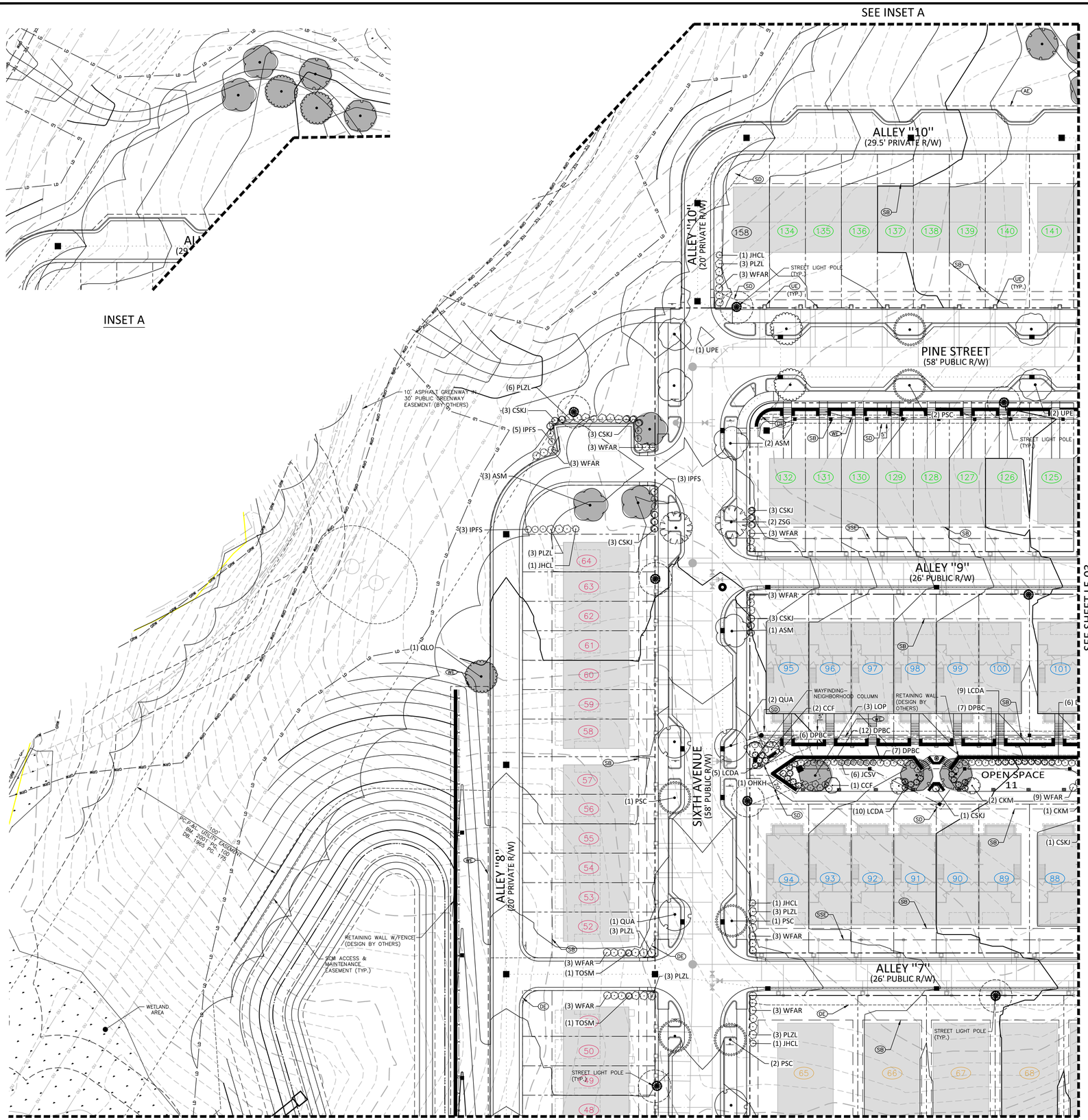

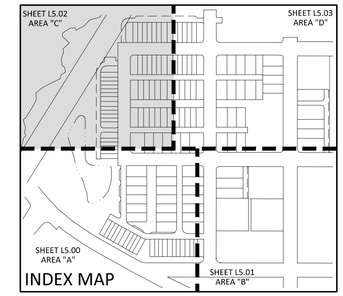

PLANT SCHEDULE AREA C

CANOPY TREES	CODE	COMMON NAME	BOTANICAL NAME	REMARKS
	ASM	Legacy Sugar Maple	Acer saccharum 'Legacy'	STREET TREE/REPLACEMENT
	PSC	Chinese Pistache	Pistacia chinensis	STREET TREE
	LOP	Columbia London Plane Tree	Platanus x acerifolia 'Columbia'	REPLACEMENT
	QUA	Sawtooth Oak	Quercus acutissima	STREET TREE
	QLO	Overcup Oak	Quercus lyrata	REPLACEMENT
	UPE	Allee® Lacebark Elm	Ulmus parvifolia `Emer II`	STREET TREE
	ZSG	Green Vase Japanese Zelkova	Zelkova serrata `Green Vase`	STREET TREE

DECIDUOUS SHRUBS	CODE	COMMON NAME	BOTANICAL NAME	REMARKS
	WFAR	Wine & Roses® Weigela	Weigela florida 'Alexandra'	SCREEN

EVERGREEN SHRUBS	CODE	COMMON NAME	BOTANICAL NAME	REMARKS
	CSKJ	Kanjiro Camellia	Camellia sasanqua 'Kanjiro'	SCREEN
	IPFS	Florida Sunshine Anise Tree	Illicium parviflorum 'Florida Sunshine'	SCREEN
	JHCL	Columnar Hetzii Juniper	Juniperus hetzii Columnaris	SCREEN
	PLZL	Zabel English Laurel	Prunus laurocerasus 'Zabeliana'	SCREEN
	TOSM	Emerald Green Arborvitae	Thuja occidentalis 'Smaragd'	SCREEN

TIER 3 TREE REPLACEMENT (SEE CALCULATIONS SHEET L5.04)

PLANT SCHEDULE OPEN SPACE 11

SYMBOL	CODE	COMMON / BOTANICAL NAME	REMARKS
UNDERSTORY TREES			
	CCF	Forest Pansy Eastern Redbud / Cercis canadensis 'Forest Pansy'	AMENITY
	CKM	Milky Way Kousa Dogwood / Cornus kousa 'Milky Way'	AMENITY
DECIDUOUS SHRUBS			
	WFAR	Wine & Roses® Weigela / Weigela florida 'Alexandra'	SCREEN/AMENITY
EVERGREEN SHRUBS			
	CSKJ	Kanjiro Camellia / Camellia sasanqua 'Kanjiro'	SCREEN/AMENITY
	DPBC	Blue Cascade® Distylium / Distylium x 'PIIDIST-II'	AMENITY
	JCSV	Green Sargent Juniper / Juniperus chinensis sargentii 'Viridis'	AMENITY
	LCDA	Daruma Loropetalum / Loropetalum chinense DARUMA	AMENITY
	OHKH	Fragrant Princess Dwarf Holly Olive / Osmanthus heterophyllus 'Kaori Hime'	AMENITY

LIGHTING LEGEND

KEY	FIXTURE
	POLE MOUNTED PEDESTRIAN
	WALL MOUNTED PATHWAY
	GROUND MOUNTED PATHWAY

*FOR FIXTURE MODEL/TYPE (SEE DETAILS SHEET L5.06)

EASEMENT LEGEND

- DE STORM DRAINAGE EASEMENT
- UE CITY OF RALEIGH WATERLINE EASEMENT
- SSE CITY OF RALEIGH SANITARY SEWER EASEMENT
- AE PUBLIC ACCESS EASEMENT

LEGEND

- SCM STORMWATER CONTROL MEASURE

GRAPHIC SCALE
0 15 30 60
1 inch = 30 ft.

Town Certification. This design has been reviewed by the Engineer for the Town of Knightdale, and to the best of my knowledge and belief, it conforms to the requirements established in the Standard Specifications of the Town of Knightdale.
By: _____ Date: _____
Town Engineer
These plans are approved by the Town of Knightdale and serve as construction plans for this project.
By: _____ Date: _____
Administrator

FINAL DRAWING - RELEASED FOR CONSTRUCTION

MCADAMS
The John R. McAdams Company, Inc.
2905 Meridian Parkway
Durham, NC 27713

phone 919. 361. 5000
fax 919. 361. 2269
license number: C-0293, C-187

www.mcadamsco.com

CLIENT

ALLIANCE GROUP OF NC, LLC
7208 FALLS OF NEUSE RD, SUITE 101
RALEIGH, NORTH CAROLINA 27615
JACOB ANDERSON
PHONE: 919. 239. 9486

AGNC

DOWNTOWN NORTH AT KNIGHTDALE STATION
CONSTRUCTION DRAWINGS - PHASE 1
N SMITHFIELD ROAD
KNIGHTDALE, NORTH CAROLINA

NORTH CAROLINA PROFESSIONAL SEAL 1851 MARK D. SHAW, PE

REVISIONS

NO.	DATE	
1	----	----
2	----	----
3	----	----
4	----	----
5	----	----
6	----	----

PLAN INFORMATION

PROJECT NO.	AGN-21002
FILENAME	AGN21002-LS1
CHECKED BY	XXX
DRAWN BY	XXX
SCALE	1" = 30'
DATE	02. 16. 2024

SHEET

LANDSCAPE PLAN - AREA "C"

L5.02

M:\Projects\AGN\AGN21002\04-Production\Engineering\Current Drawings\Construction Drawings Sets\Phase-1\AGN21002-LS1.dwg, 2/19/2024 4:48:39 PM, Mark Shawl

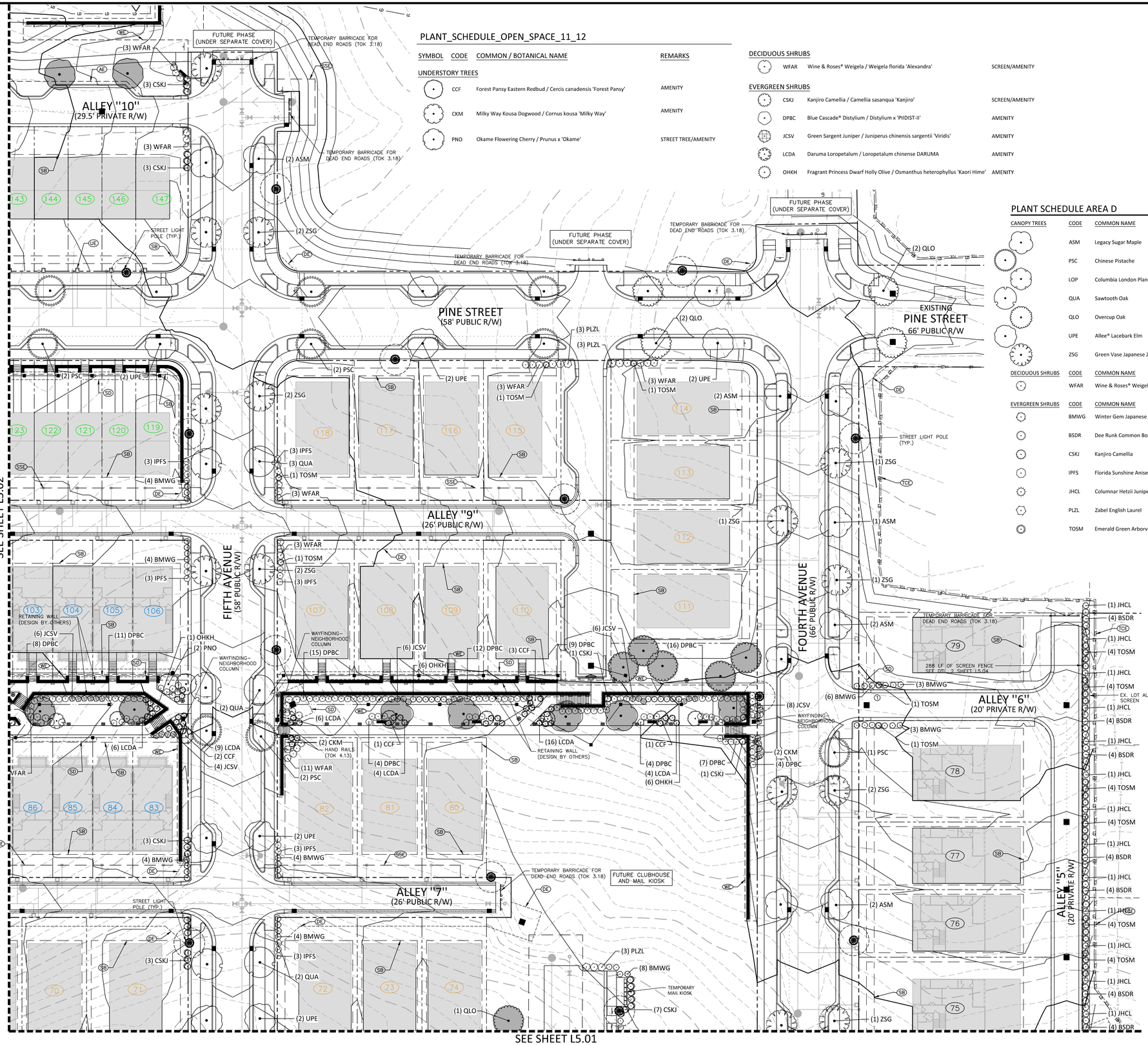

PLANT_SCHEDULE_OPEN_SPACE_11_12

SYMBOL	CODE	COMMON / BOTANICAL NAME	REMARKS
UNDERSTORY TREES			
	CCF	Forest Pansy Eastern Redbud / Cercis canadensis 'Forest Pansy'	AMENITY
	CKM	Milky Way Kousa Dogwood / Cornus kousa 'Milky Way'	AMENITY
	PNO	Okame Flowering Cherry / Prunus x 'Okame'	STREET TREE/AMENITY
DECIDUOUS SHRUBS			
	WFAR	Wine & Roses® Weigela / Weigela florida 'Alexandra'	SCREEN/AMENITY
EVERGREEN SHRUBS			
	CSKJ	Kanjiro Camellia / Camellia sasanqua 'Kanjiro'	SCREEN/AMENITY
	DPBC	Blue Cascade® Distylium / Distylium x 'PIIDIST-II'	AMENITY
	JCSV	Green Sargent Juniper / Juniperus chinensis sargentii 'Viridis'	AMENITY
	LCDA	Daruma Loropetalum / Loropetalum chinense DARUMA	AMENITY
	OHKH	Fragrant Princess Dwarf Holly Olive / Osmanthus heterophyllus 'Kaori Hime'	AMENITY

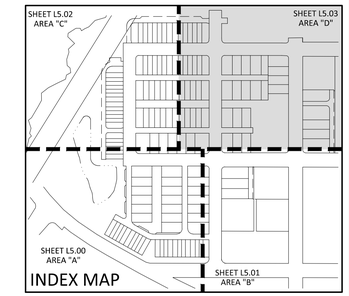

PLANT SCHEDULE AREA D

CANOPY TREES	CODE	COMMON NAME	BOTANICAL NAME	REMARKS
	ASM	Legacy Sugar Maple	Acer saccharum 'Legacy'	STREET TREE/REPLACEMENT
	PSC	Chinese Pistache	Pistacia chinensis	STREET TREE
	LOP	Columbia London Plane Tree	Platanus x acerifolia 'Columbia'	REPLACEMENT
	QUA	Sawtooth Oak	Quercus acutissima	STREET TREE
	QLO	Overcup Oak	Quercus lyrata	REPLACEMENT
	UPE	Allee® Lacebark Elm	Ulmus parvifolia `Emer II`	STREET TREE
	ZSG	Green Vase Japanese Zelkova	Zelkova serrata `Green Vase`	STREET TREE
DECIDUOUS SHRUBS	**CODE**	**COMMON NAME**	**BOTANICAL NAME**	**REMARKS**
	WFAR	Wine & Roses® Weigela	Weigela florida 'Alexandra'	SCREEN
EVERGREEN SHRUBS	**CODE**	**COMMON NAME**	**BOTANICAL NAME**	**REMARKS**
	BMWG	Winter Gem Japanese Boxwood	Buxus microphylla japonica 'Winter Gem'	SCREEN
	BSDR	Dee Runk Common Boxwood	Buxus sempervirens 'Dee Runk'	SCREEN
	CSKJ	Kanjiro Camellia	Camellia sasanqua 'Kanjiro'	SCREEN
	IPFS	Florida Sunshine Anise Tree	Illicium parviflorum 'Florida Sunshine'	SCREEN
	JHCL	Columnar Hetzii Juniper	Juniperus hetzii Columnaris	SCREEN
	PLZL	Zabel English Laurel	Prunus laurocerasus 'Zabeliana'	SCREEN
	TOSM	Emerald Green Arborvitae	Thuja occidentalis 'Smaragd'	SCREEN

TIER 3 TREE REPLACEMENT (SEE CALCULATIONS SHEET L5.04)

LIGHTING LEGEND

KEY	FIXTURE
	POLE MOUNTED PEDESTRIAN
	WALL MOUNTED PATHWAY
	GROUND MOUNTED PATHWAY

*FOR FIXTURE MODEL/TYPE (SEE DETAILS SHEET L5.06)

EASEMENT LEGEND

- DE STORM DRAINAGE EASEMENT
- UE CITY OF RALEIGH WATERLINE EASEMENT
- SSE CITY OF RALEIGH SANITARY SEWER EASEMENT
- AE PUBLIC ACCESS EASEMENT

GRAPHIC SCALE
0 20 40 80
1 inch = 40 ft.

Town Certification. This design has been reviewed by the Engineer for the Town of Knightdale, and to the best of my knowledge and belief, it conforms to the requirements established in the Standard Specifications of the Town of Knightdale.
By: _____ Date: _____
Town Engineer
These plans are approved by the Town of Knightdale and serve as construction plans for this project.
By: _____ Date: _____
Administrator

FINAL DRAWING - RELEASED FOR CONSTRUCTION

MCADAMS
The John R. McAdams Company, Inc.
2905 Meridian Parkway
Durham, NC 27713

phone 919. 361. 5000
fax 919. 361. 2269
license number: C-0293, C-187

www.mcadamsco.com

CLIENT

ALLIANCE GROUP OF NC, LLC
7208 FALLS OF NEUSE RD, SUITE 101
RALEIGH, NORTH CAROLINA 27615
JACOB ANDERSON
PHONE: 919. 239. 9486

AGNC

DOWNTOWN NORTH AT KNIGHTDALE STATION
CONSTRUCTION DRAWINGS - PHASE 1
N SMITHFIELD ROAD
KNIGHTDALE, NORTH CAROLINA

NORTH CAROLINA LICENSED LANDSCAPE ARCHITECT 1051 MARK D. SHAHL

REVISIONS

NO.	DATE	
1	----	----
2	----	----
3	----	----
4	----	----
5	----	----
6	----	----

PLAN INFORMATION

PROJECT NO.	AGN-21002
FILENAME	AGN21002-LS1
CHECKED BY	XXX
DRAWN BY	XXX
SCALE	1" = 30'
DATE	02. 16. 2024

SHEET

LANDSCAPE PLAN - AREA "D"

L5.03

M:\Projects\AGN\AGN21002\04-Production\Engineering\Current Drawings\Construction Drawings Sets\Phase-1\AGN21002-LS1.dwg, 2/19/2024 4:51:18 PM, Mark Shahl

GENERAL LANDSCAPE NOTES:

1. ALL MATERIALS AND METHODS OF CONSTRUCTION SHALL BE IN ACCORDANCE WITH THE TOWN OF KNIGHTDALE AND THE STATE OF NORTH CAROLINA STANDARDS AND SPECIFICATIONS.
2. CONTRACTOR IS RESPONSIBLE FOR THE SITE INSPECTION BEFORE LANDSCAPE CONSTRUCTION AND INSTALLATION IN ORDER TO BECOME FAMILIAR WITH THE EXISTING CONDITIONS.
3. LANDSCAPE CONTRACTOR IS RESPONSIBLE FOR LOCATING ALL UNDERGROUND UTILITIES BEFORE BEGINNING DEMOLITION OR INSTALLATION.
4. CONTRACTOR SHALL NOTIFY LANDSCAPE ARCHITECT OF ANY DISCREPANCIES BETWEEN THE NOTES, SPECIFICATIONS, DRAWINGS OR SITE CONDITIONS FOR RESOLUTION PRIOR TO INSTALLATION.
5. ANY DAMAGE TO UTILITIES SHALL BE REPAIRED AT THE CONTRACTOR'S EXPENSE.
6. VERIFICATION OF TOTAL PLANT QUANTITIES AS SHOWN IN THE PLANT SCHEDULE SHALL BE THE RESPONSIBILITY OF THE LANDSCAPE CONTRACTOR. ANY DISCRPANCIES SHALL BE BROUGHT TO THE ATTENTION OF THE LANDSCAPE ARCHITECT.
13. SUBSTITUTIONS OF SPECIFIC PLANTS CAN ONLY OCCUR WITH PRIOR WRITTEN PERMISSION OF BOTH OWNER AND LANDSCAPE ARCHITECT.
14. CONTRACTOR TO ENSURE PROPER STABILIZATION AND SEEDING OF THE SITE IN ACCORDANCE WITH APPLICABLE REGULATIONS.
15. LANDSCAPE MATERIAL SHALL BE WELL FORMED, VIGOROUS, GROWING SPECIMENS WITH GROWTH TYPICAL OF VARIETIES SPECIFIED AND SHALL BE FREE FROM DAMAGE, INSECTS AND DISEASES. MATERIAL SHALL EQUAL OR SURPASS #1 QUALITY AS DEFINED IN THE CURRENT ISSUE OF "AMERICAN STANDARD FOR NURSERY STOCK" AS PUBLISHED BY AMERICAN HORT - AMERICANHORT.ORG.
16. ALL PLANT MATERIAL IS TO BE CAREFULLY HANDLED BY THE ROOT BALL, NOT THE TRUNK, BRANCHES AND/OR FOLIAGE OF THE PLANT. MISHANDLED PLANT MATERIAL MAY BE REJECTED BY THE LANDSCAPE ARCHITECT.
17. ALL PLANT MATERIAL IS TO BE WELL ROOTED, NOT ROOT BOUND, SUCH THAT THE ROOT BALL REMAINS INTACT THROUGHOUT THE PLANTING PROCESS. DEFICIENT PLANT MATERIAL MAY BE REJECTED BY THE LANDSCAPE ARCHITECT OR OWNER.
18. ALL PLANTS TO BE A MINIMUM OF WHAT IS SPECIFIED IN THE PLANT SCHEDULE. ANY CHANGES OR SUBSTITUTIONS SHALL BE APPROVED BY THE LANDSCAPE ARCHITECT AND GOVERNING JURISDICTION PRIOR TO ANY HOLE BEING DUG.
19. ALL TREES MUST BE PLANTED AFTER OCTOBER 1 AND BEFORE MARCH 31.
20. CONTRACTOR TO COORDINATE WITH OWNER'S REPRESENTATIVE AND LANDSCAPE ARCHITECT TO ESTABLISH THE EXTENTS OF MULCH/SEED/SOD IF NOT SPECIFICALLY SHOWN ON PLANS.
21. CONTRACTOR SHALL PROVIDE POSITIVE DRAINAGE IN ALL PLANTING AREAS.
22. PROPOSED TREES TO BE PLANTED A MINIMUM 10 FEET FROM ANY LIGHT POLE AS MEASURED FROM TRUNK OF THE TREE TO THE POLE.
23. PROPOSED TREES TO BE PLANTED A MINIMUM 5 FEET FROM ANY FIRE HYDRANT AS MEASURED FROM TRUNK OF THE TREE TO THE HYDRANT.
24. ALL TREE PLANTINGS SHALL BE MULCHED WITH 3 INCHES OF SHREDDED BARK OR 4 INCHES OF PINE STRAW IN A 3 FOOT RADIUS AROUND THE TREE, OR TO THE DRIPLINE, WHICHEVER IS GREATER. THE MULCH SHALL BE FREE OF TRASH AND MAINTAINED WEED FREE THEREAFTER. MULCH SHALL NOT COVER THE ROOT COLLAR.

MAINTENANCE NOTES:

1. WARRANTY: INSTALLER SHALL REPAIR OR REPLACE ANY PLANTINGS THAT FAIL IN MATERIALS, WORKMANSHIP, OR GROWTH WITHIN ONE YEAR AFTER THE DATE OF SUBSTANTIAL COMPLETION. FAILURES INCLUDE, BUT ARE NOT LIMITED TO, THE FOLLOWING:
   - DEATH AND UNSATISFACTORY GROWTH, EXCEPT FOR DEFECTS RESULTING FROM LACK OF ADEQUATE MAINTENANCE, NEGLECT, ABUSE BY OWNER, OR INCIDENTS THAT ARE BEYOND CONTRACTOR'S CONTROL.
   - STRUCTURAL FAILURES INCLUDING PLANTINGS FALLING OR BLOWING OVER.
2. THE OWNERS OF PROPERTY SHALL BE RESPONSIBLE FOR ALL NATURAL AND PHYSICAL FEATURES REQUIRED BY CODE AND SHALL PRESERVE AND MAINTAIN THESE FEATURES IN HEALTHY GROWING CONDITIONS, REPLACE THEM WHEN NECESSARY, AND KEEP THE AREAS AROUND THEM FREE OF REFUSE AND DEBRIS IN A MANNER THAT PREVENTS REFUSE AND DEBRIS FROM WASHING ONTO PUBLIC RIGHTS-OF-WAY. FAILURE TO MAINTAIN ALL PLANTINGS IN ACCORDANCE WITH THIS PLAN MAY CONSTITUTE A VIOLATION OF THIS ORDINANCE AND MAY RESULT IN FINES. THE OWNER SHALL BE RESPONSIBLE FOR MAINTENANCE OF THE VEGETATION, INCLUDING BUT NOT LIMITED TO:
   - FERTILIZATION
   - PRUNING WITHIN LIMITS
   - PEST CONTROL
   - MULCHING
   - MOWING
   - PROTECTION OF THE ROOT ZONES FROM EQUIPMENT, CONSTRUCTION AND RELATED MATERIALS, ETC.
   - METHOD OF IRRIGATION
   - OTHER CONTINUING MAINTENANCE OPERATIONS

LANDSCAPE CALCULATIONS

STREET TREES (PHASE 1)

FOURTH AVENUE*	1,182 LF
CANOPY TREES REQUIRED:	30 (1/40 LF)
PROVIDED:	19
FIFTH AVENUE*	2,280 LF
CANOPY TREES REQUIRED:	57 (1/40 LF)
PROVIDED:	37
SIXTH AVENUE*	980 LF
CANOPY TREES REQUIRED:	25 (1/40 LF)
PROVIDED:	17
PINE STREET*	1,520 LF
CANOPY TREES REQUIRED:	38 (1/40 LF)
PROVIDED:	22
OAKWOOD STREET*	1,810 LF
CANOPY TREES REQUIRED:	46 (1/40 LF)
PROVIDED:	26
MAIN STREET	280 LF
UNDERSTORY TREES REQUIRED:	12 (1/25 LF)
PROVIDED:	12
N. SMITHFIELD ROAD**	538 LF OUTSIDE POWER R/W
CANOPY TREES REQUIRED:	13 (1/40 LF)
PROVIDED:	13
N. SMITHFIELD ROAD**	70 LF POWER R/W
UNDERSTORY TREES REQUIRED:	3 (1/25 LF)
PROVIDED:	3

(145) TREES TOTAL

*STREET TREES PROVIDED HAVE BEEN REDUCED TO PROVIDE ON-STREET PARKING AT RESIDENTIAL UNITS.

**CALCULATED LINEAR FOOTAGE FOR N. SMITHFIELD ROAD WAS DECREASED DUE TO UTILITY EASEMENTS AND ADJACENT WETLANDS.

TREE REPLACEMENT

ALL TREES GREATER THAN 24" DBH TO BE REPLACED AT A RATE OF 1 TREE PER 12" DBH AND SHOULD BE INCORPORATED INTO OPEN SPACE AMENITIES WHEREVER POSSIBLE (UDO SEC 7.4.H.1). SEE PLAN SHEETS FOR LOCATION OF REPLACEMENT TREES.

- EXISTING TREES GREATER THAN 24" DBH: 19 TREES (495" TOTAL DBH)
- REPLACEMENT TREES: 42 TREES (1 FOR EVERY 12" DBH)

RESIDENTIAL LANDSCAPING NOTES:

1. EACH SINGLE-FAMILY OR DUPLEX LOT SHALL CONTAIN A MINIMUM OF ONE CANOPY TREE FOR EVERY 2,000 SF OF LOT AREA OR FRACTION THEREOF UP TO 20,000 SF IN LOT AREA. ANY PORTION OF THE RESIDENTIAL LOT OCCUPIED BY A RECORDED UTILITY EASEMENT SHALL NOT BE INCLUDED AS PART OF THE TOTAL LOT AREA. THE LOCATION OF PLANTING TO ACCOUNT FOR PHYSICAL CONDITIONS MAY BE ADJUSTED BY THE ADMINISTRATOR.
2. THE USE OF EXISTING TREES MEETING THE FOLLOWING STANDARDS TO SATISFY THIS REQUIREMENT IS ENCOURAGED. EXISTING LARGE SHADE TREES MEASURING MORE THAN 6 INCHES IN DBH MAY BE COUNTED TOWARDS FULFILLING THIS REQUIREMENT.
3. REQUIRED STREET TREES MAY NOT BE COUNTED TOWARDS THE FULFILLMENT OF THE RESIDENTIAL LANDSCAPING REQUIREMENT. APART FROM REQUIRED STREET TREES, ALL OTHER TREES REQUIRED FOR RESIDENTIAL LANDSCAPING SHALL BE PLANTED WITHIN THE PRIVATE LOT.
4. FOUNDATION PLANTINGS CONSISTING OF EVERGREEN SHRUBS SHALL BE INSTALLED ALONG THE ENTIRE FOUNDATION WALL OF THE BUILDING. PLANT INSTALLATION SHALL BE A MINIMUM OF TWO FEET IN HEIGHT PLANTED AT FOUR FOOT INTERVALS.

EX. LOT ALLEY BUFFER DETAIL

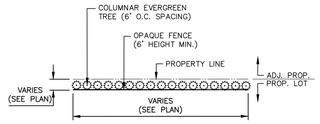

PLAN

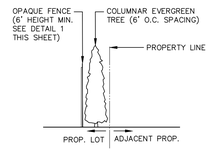

ELEVATION

ALLEY PARKING BUFFER DETAIL (TYP.)

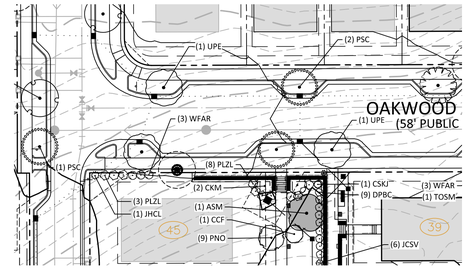

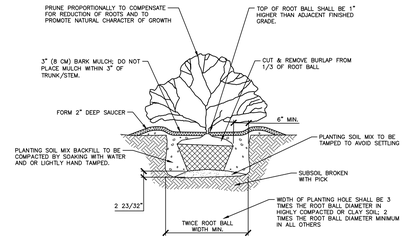

01 SHRUB INSTALLATION

SCALE: 3/8"=1'-0"

PLANT SCHEDULE OVERALL

CANOPY TREES	CODE	QTY	COMMON NAME	BOTANICAL NAME	CAL	HEIGHT	REMARKS
	ASM	36	Legacy Sugar Maple	Acer saccharum 'Legacy'	2" min	8` min	STREET TREE/REPLACEMENT
	PSC	32	Chinese Pistache	Pistacia chinensis	2" min	8` min	STREET TREE
	LOP	11	Columbia London Plane Tree	Platanus x acerifolia 'Columbia'	2" min	8` min	REPLACEMENT
	QUA	26	Sawtooth Oak	Quercus acutissima	2" min	8` min	STREET TREE
	QLO	17	Overcup Oak	Quercus lyrata	2" min	8` min	REPLACEMENT
	UPE	24	Allee® Lacebark Elm	Ulmus parvifolia `Emer II`	2" min	8` min	STREET TREE
	ZSG	31	Green Vase Japanese Zelkova	Zelkova serrata `Green Vase`	2" min	8` min	STREET TREE
UNDERSTORY TREES	**CODE**	**QTY**	**COMMON NAME**	**BOTANICAL NAME**	**CAL**	**HEIGHT**	**REMARKS**
	KAP	6	Golden Rain Tree	Koelreuteria paniculata	1.5" min	6` min	STREET TREE
	MSR	3	Royal Star Magnolia	Magnolia stellata `Royal Star`	Multi	6` min	STREET TREE
	PNO	6	Okame Flowering Cherry	Prunus x 'Okame'	1.5" min	6` min	STREET TREE
DECIDUOUS SHRUBS	**CODE**	**QTY**	**COMMON NAME**	**BOTANICAL NAME**	**CONT**	**HEIGHT**	**REMARKS**
	WFAR	66	Wine & Roses® Weigela	Weigela florida 'Alexandra'	3 gal	15" min	SCREEN
EVERGREEN SHRUBS	**CODE**	**QTY**	**COMMON NAME**	**BOTANICAL NAME**	**CONT**	**HEIGHT**	**REMARKS**
	BMWG	49	Winter Gem Japanese Boxwood	Buxus microphylla japonica 'Winter Gem'	3 gal	12" min	SCREEN
	BSDR	43	Dee Runk Common Boxwood	Buxus sempervirens 'Dee Runk'	7 gal	36" min.	SCREEN
	CSKJ	37	Kanjiro Camellia	Camellia sasanqua 'Kanjiro'	5 gal	18" min	SCREEN
	IPFS	29	Florida Sunshine Anise Tree	Illicium parviflorum 'Florida Sunshine'	3 gal	12" min	SCREEN
	JHCL	29	Columnar Hetzii Juniper	Juniperus hetzii Columnaris	7 gal	60" min	SCREEN
	PLZL	66	Zabel English Laurel	Prunus laurocerasus 'Zabeliana'	3 gal	15" min	SCREEN
	TOSM	45	Emerald Green Arborvitae	Thuja occidentalis 'Smaragd'	7 gal	36" min.	SCREEN

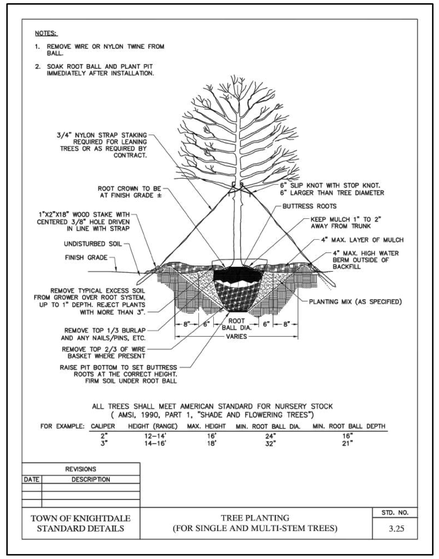

PLANT SCHEDULE OPEN SPACE 11

SYMBOL	CODE	QTY	COMMON / BOTANICAL NAME	CAL	HEIGHT	REMARKS
UNDERSTORY TREES						
	CCF	5	Forest Pansy Eastern Redbud / Cercis canadensis 'Forest Pansy'	1.5" min	6` min	AMENITY
	CKM	4	Milky Way Kousa Dogwood / Cornus kousa 'Milky Way'	1.5" min	6` min	AMENITY
	PNO	2	Okame Flowering Cherry / Prunus x 'Okame'	1.5" min	6` min	STREET TREE/AMENITY
SYMBOL	**CODE**	**QTY**	**COMMON / BOTANICAL NAME**	**CONT**	**HEIGHT**	**REMARKS**
DECIDUOUS SHRUBS						
	WFAR	15	Wine & Roses® Weigela / Weigela florida 'Alexandra'	3 gal	15" min	SCREEN
EVERGREEN SHRUBS						
	CSKJ	2	Kanjiro Camellia / Camellia sasanqua 'Kanjiro'	5 gal	18" min	SCREEN/AMENITY
	DPBC	63	Blue Cascade® Distylium / Distylium x 'PIIDIST-II'	3 gal	18" min	AMENITY
	JCSV	16	Green Sargent Juniper / Juniperus chinensis sargentii 'Viridis'	3 gal	6" - 12"	AMENITY
	LCDA	45	Daruma Loropetalum / Loropetalum chinense DARUMA	3 gal	15" min	AMENITY
	OHKH	3	Fragrant Princess Dwarf Holly Olive / Osmanthus heterophyllus 'Kaori Hime'	5 gal	24" min	AMENITY

PLANT SCHEDULE OPEN SPACE 12

SYMBOL	CODE	QTY	COMMON / BOTANICAL NAME	CAL	HEIGHT	REMARKS
UNDERSTORY TREES						
	CCF	6	Forest Pansy Eastern Redbud / Cercis canadensis 'Forest Pansy'	1.5" min	6` min	
	CKM	4	Milky Way Kousa Dogwood / Cornus kousa 'Milky Way'	1.5" min	6` min	
SYMBOL	**CODE**	**QTY**	**COMMON / BOTANICAL NAME**	**CONT**	**HEIGHT**	**REMARKS**
DECIDUOUS SHRUBS						
	WFAR	9	Wine & Roses® Weigela / Weigela florida 'Alexandra'	3 gal	15" min	SCREEN
EVERGREEN SHRUBS						
	CSKJ	3	Kanjiro Camellia / Camellia sasanqua 'Kanjiro'	5 gal	18" min	SCREEN/AMENITY
	DPBC	78	Blue Cascade® Distylium / Distylium x 'PIIDIST-II'	3 gal	18" min	AMENITY
	JCSV	19	Green Sargent Juniper / Juniperus chinensis sargentii 'Viridis'	3 gal	6" - 12"	AMENITY
	LCDA	30	Daruma Loropetalum / Loropetalum chinense DARUMA	3 gal	15" min	AMENITY
	OHKH	12	Fragrant Princess Dwarf Holly Olive / Osmanthus heterophyllus 'Kaori Hime'	5 gal	24" min	AMENITY

PLANT SCHEDULE OPEN SPACE 13

SYMBOL	CODE	QTY	COMMON / BOTANICAL NAME	CAL	HEIGHT	REMARKS
UNDERSTORY TREES						
	CCF	7	Forest Pansy Eastern Redbud / Cercis canadensis 'Forest Pansy'	1.5" min	6` min	
	CKM	4	Milky Way Kousa Dogwood / Cornus kousa 'Milky Way'	1.5" min	6` min	
	PNO	9	Okame Flowering Cherry / Prunus x 'Okame'	1.5" min	6` min	STREET TREE
SYMBOL	**CODE**	**QTY**	**COMMON / BOTANICAL NAME**	**CONT**	**HEIGHT**	**REMARKS**
DECIDUOUS SHRUBS						
	WFAR	8	Wine & Roses® Weigela / Weigela florida 'Alexandra'	3 gal	15" min	SCREEN
EVERGREEN SHRUBS						
	CSKJ	3	Kanjiro Camellia / Camellia sasanqua 'Kanjiro'	5 gal	18" min	SCREEN/AMENITY
	DPBC	47	Blue Cascade® Distylium / Distylium x 'PIIDIST-II'	3 gal	18" min	AMENITY
	JCSV	12	Green Sargent Juniper / Juniperus chinensis sargentii 'Viridis'	3 gal	6" - 12"	AMENITY
	LCDA	20	Daruma Loropetalum / Loropetalum chinense DARUMA	3 gal	15" min	AMENITY
	OHKH	19	Fragrant Princess Dwarf Holly Olive / Osmanthus heterophyllus 'Kaori Hime'	5 gal	24" min	AMENITY
	PLZL	8	Zabel English Laurel / Prunus laurocerasus 'Zabeliana'	3 gal	15" min	SCREEN

SEE SHEET C0.01 FOR ALL PROJECT, SITE, GRADING, STORM DRAINAGE AND UTILITY NOTES

ALL CONSTRUCTION SHALL BE IN ACCORDANCE WITH THE CURRENT TOWN OF KNIGHTDALE, CITY OF RALEIGH PUBLIC UTILITIES, AND NCDOT (WHERE APPLICABLE) ENGINEERING DESIGN AND CONSTRUCTION STANDARDS

Town Certification. This design has been reviewed by the Engineer for the Town of Knightdale, and to the best of my knowledge and belief, it conforms to the requirements established in the Standard Specifications of the Town of Knightdale.
By: _____ Date: _____
Town Engineer
These plans are approved by the Town of Knightdale and serve as construction plans for this project.
By: _____ Date: _____
Administrator

FINAL DRAWING - RELEASED FOR CONSTRUCTION

MCADAMS
The John R. McAdams Company, Inc.
2905 Meridian Parkway
Durham, NC 27713

phone 919. 361. 5000
fax 919. 361. 2269
license number: C-0293, C-187

www.mcadamsco.com

CLIENT

ALLIANCE GROUP OF NC, LLC
7208 FALLS OF NEUSE RD, SUITE 101
RALEIGH, NORTH CAROLINA 27615
JACOB ANDERSON
PHONE: 919. 239. 9486

AGNC ARCHITECTURE | CONSULTING | PLANNING

DOWNTOWN NORTH AT KNIGHTDALE STATION
CONSTRUCTION DRAWINGS - PHASE 1
N SMITHFIELD ROAD
KNIGHTDALE, NORTH CAROLINA

REVISIONS

NO.	DATE	
1	----	----
2	----	----
3	----	----
4	----	----
5	----	----
6	----	----

PLAN INFORMATION

PROJECT NO.	AGN-21002
FILENAME	AGN21002-LS1
CHECKED BY	XXX
DRAWN BY	XXX
SCALE	N.T.S.
DATE	02. 16. 2024

SHEET

LANDSCAPE DETAILS

L5.04

M:\Project\AGN\AGN21002\04-Production\Engineering\Current Drawings\Construction Drawings Set\Phase-1\AGN21002-LS1.dwg, 7/19/2024 4:52:01 PM, Mark Shawl

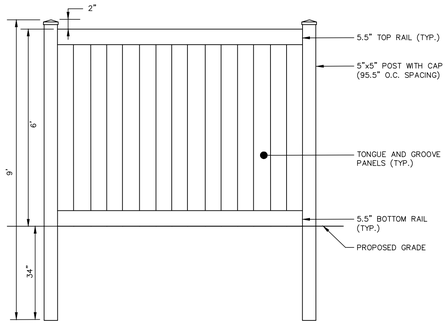

NOTES:
1. FENCE PRODUCT TO BE INSTALLED PER MANUFACTURER'S INSTRUCTIONS AND RECOMMENDATIONS.

PRODUCT INFORMATION:

SUPPLIER: ILLUSIONS VINYL FENCE
MODEL: PRIVACY TOMGUE AND GROOVE (V300-6)

https://www.https://illusionsfence.com/fence_styles/privacy-tongue-groove/

1.800.339.3362

01 SCREEN FENCE
SCALE: NTS

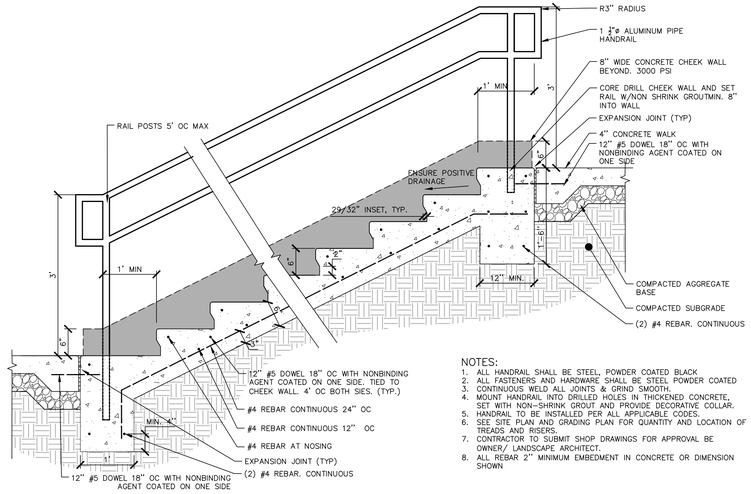

NOTES:
1. ALL HANDRAIL SHALL BE STEEL, POWDER COATED BLACK
2. ALL FASTENERS AND HARDWARE SHALL BE STEEL POWDER COATED
3. CONTINUOUS WELD ALL JOINTS & GRIND SMOOTH.
4. MOUNT HANDRAIL INTO DRILLED HOLES IN THICKENED CONCRETE, SET WITH NON-SHRINK GROUT AND PROVIDE DECORATIVE COLLAR.
5. HANDRAIL TO BE INSTALLED PER ALL APPLICABLE CODES.
6. SEE SITE PLAN AND GRADING PLAN FOR QUANTITY AND LOCATION OF TREADS AND RISERS.
7. CONTRACTOR TO SUBMIT SHOP DRAWINGS FOR APPROVAL BE OWNER/ LANDSCAPE ARCHITECT.
8. ALL REBAR 2" MINIMUM EMBEDMENT IN CONCRETE OR DIMENSION SHOWN

02 STAIR WITH HANDRAIL
SCALE: NTS

PRODUCT INFORMATION:

SUPPLIER: ANOVA
MODEL: EXPOSITION 33 GALLON TRASH RECEPTACLE
FINISH: TEXTURED BRONZE

HTTPS://WWW.ANOVAFURNISHINGS.COM/CATEGORIES/COMMERCIAL-OUTDOOR-RECEPTACLES/EXPOSITION-33-GALLON-TRASH-RECEPTACLE-RECYCLER-SIDE-DOOR

03 TRASH RECEPTACLE
SCALE: NTS

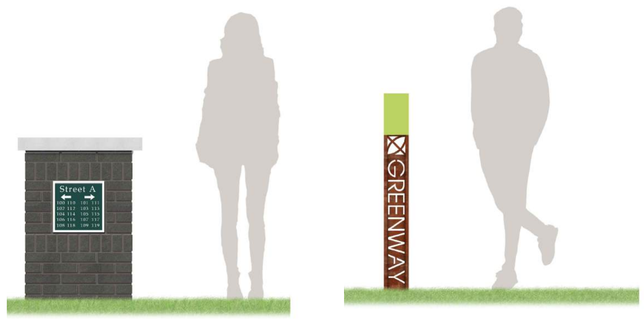

NEIGHBORHOOD COLUMN

GREENWAY SIGN

IMAGES CONVEY DESIGN INTENT ONLY

04 WAYFINDING
SCALE: NTS

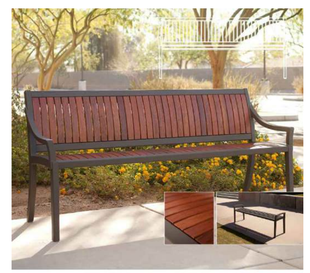

PRODUCT INFORMATION:

MANUFACTURER: FORMS + SURFACES
MODEL: CORDIA 6' BENCH
COLOR: DARK CORTEN POWDERCOAT WITH CUMARU SLATS

PRODUCT INFORMATION:

MANUFACTURER: ANOVA FURNISHINGS
MODEL: CORONADO SERIES 6' CONTOUR BENCH
COLOR: BRONZE POWDERCOAT WITH MAHOGANY RECYCLED SLATS

NOTE: IMAGES SHOW DESIGN INTENT AND OPTIONAL PRODUCT SELECTIONS. ITEMS SUBJECT TO CHANGE BASED ON AVAILABILITY AT TIME OF PURCHASE.

05 BENCH
SCALE: NTS

PRODUCT INFORMATION:

SUPPLIER: MADRAX
MODEL: ORION SQUARE RACK
FINISH: BRONZE POWDER COATED

HTTPS://WWW.MADRAX.COM/ORION-SQUARE-BIKE-RACK

06 BIKE RACK
SCALE: NTS

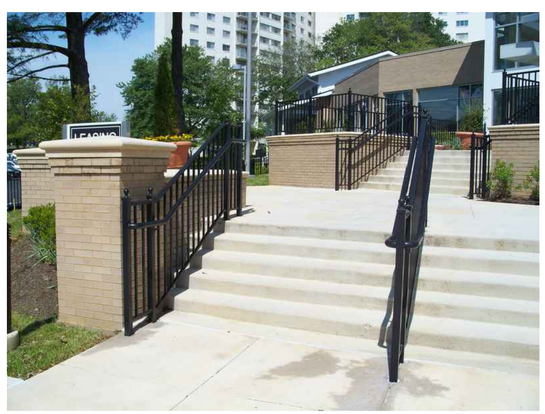

07 GUARDRAIL / HANDRAIL
SCALE: NTS

NOTE:

CURRENT DETAILS SHOW DESIGN INTENT AND PRODUCT SELECTIONS.
ITEMS SUBJECT TO CHANGE BASED ON AVAILABILITY.

SEE SHEET C0.01 FOR ALL PROJECT, SITE, GRADING, STORM DRAINAGE AND UTILITY NOTES

ALL CONSTRUCTION SHALL BE IN ACCORDANCE WITH THE CURRENT TOWN OF KNIGHTDALE, CITY OF RALEIGH PUBLIC UTILITIES, AND NCDOT (WHERE APPLICABLE) ENGINEERING DESIGN AND CONSTRUCTION STANDARDS

Town Certification. This design has been reviewed by the Engineer for the Town of Knightdale, and to the best of my knowledge and belief, it conforms to the requirements established in the Standard Specifications of the Town of Knightdale.
By: _____ Date: _____
Town Engineer
These plans are approved by the Town of Knightdale and serve as construction plans for this project.
By: _____ Date: _____
Administrator

FINAL DRAWING - RELEASED FOR CONSTRUCTION

MCADAMS
The John R. McAdams Company, Inc.
2905 Meridian Parkway
Durham, NC 27713

phone 919. 361. 5000
fax 919. 361. 2269
license number: C-0293, C-187

www.mcadamsco.com

CLIENT

ALLIANCE GROUP OF NC, LLC
7208 FALLS OF NEUSE RD, SUITE 101
RALEIGH, NORTH CAROLINA 27615
JACOB ANDERSON
PHONE: 919. 239. 9486

AGNC

DOWNTOWN NORTH AT KNIGHTDALE STATION
CONSTRUCTION DRAWINGS - PHASE 1
N SMITHFIELD ROAD
KNIGHTDALE, NORTH CAROLINA

NORTH CAROLINA PROFESSIONAL SEAL 1951 MARK D. SHAW

REVISIONS

NO.	DATE	
1	----	----
2	----	----
3	----	----
4	----	----
5	----	----
6	----	----

PLAN INFORMATION

PROJECT NO.	AGN-21002
FILENAME	AGN21002-LS1
CHECKED BY	XXX
DRAWN BY	XXX
SCALE	N.T.S.
DATE	02. 16. 2024

SHEET

LANDSCAPE DETAILS

L5.05

M:\Projects\AGN\AGN21002\04-Production\Engineering\Current Drawings\Construction Drawings Sets\Phase-1\AGN21002-LS1.dwg, 2/16/2024 4:52:48 PM, Mark Shawl

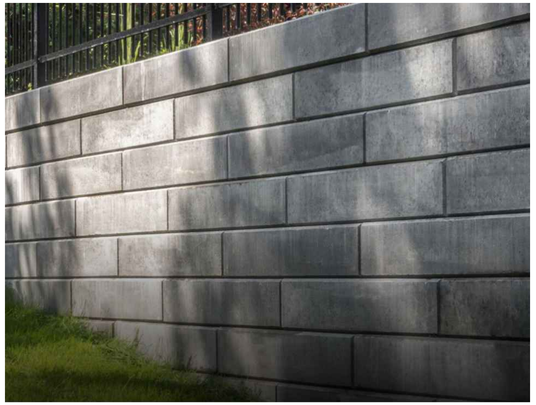

IMAGE CONVEYS DESIGN INTENT ONLY

01 SEGMENTAL REATINING WALL (TYPE A)

SCALE: NTS

IMAGE CONVEYS DESIGN INTENT ONLY

02 SEGMENTAL RETAINING WALL (TYPE B)

SCALE: NTS

IMAGE CONVEYS DESIGN INTENT ONLY

03 SEGMENTAL RETAINING WALL (TYPE C)

SCALE: NTS

IMAGE CONVEYS DESIGN INTENT ONLY

04 MASONRY RETAINING WALL (TYPE D)

SCALE: NTS

PRODUCT INFORMATION:

MANUFACTURER: FORMS + SURFACES
MODEL: CORDIA PEDESTRIAN LIGHT
COLOR: BRONZE

PRODUCT INFORMATION:

MANUFACTURER: SELUX
MODEL: QUATRO PEDESTRIAN LIGHT
COLOR: BRONZE

PRODUCT INFORMATION:

MANUFACTURER: SELUX
MODEL: MISTELLA PEDESTRIAN LIGHT
COLOR: BRONZE

NOTE: IMAGES SHOW DESIGN INTENT AND OPTIONAL PRODUCT SELECTIONS. ITEMS SUBJECT TO CHANGE BASED ON AVAILABILITY AT TIME OF PURCHASE.

05 POST MOUNTED LIGHT FIXTURE 12-14' HT

SCALE: NTS

PRODUCT INFORMATION:

MANUFACTURER: FX LUMINAIRE
MODEL: WALL LIGHT HS
COLOR: BRONZE

06 WALL MOUNTED LIGHT

SCALE: NTS

PRODUCT INFORMATION:

MANUFACTURER: WAC LIGHTING
MODEL: LED LINEAR PATH LIGHT
COLOR: BRONZE
HEIGHT: 23.5"

PRODUCT INFORMATION:

MANUFACTURER: KICHLER
MODEL: RIGHT ANGLE PATH LIGHT
COLOR: BRONZE
HEIGHT: 22"

PRODUCT INFORMATION:

MANUFACTURER: ALCON LIGHTING
MODEL: BIRCH ARCHITECTURAL LED
COLOR: BRONZE
HEIGHT: 24"

NOTE: IMAGES SHOW DESIGN INTENT AND OPTIONAL PRODUCT SELECTIONS. ITEMS SUBJECT TO CHANGE BASED ON AVAILABILITY AT TIME OF PURCHASE.

07 GROUND MOUNTED PATHWAY LIGHT

SCALE: NTS

NOTE:

CURRENT DETAILS SHOW DESIGN INTENT AND PRODUCT SELECTIONS. ITEMS SUBJECT TO CHANGE BASED ON AVAILABILITY.

SEE SHEET C0.01 FOR ALL PROJECT, SITE, GRADING, STORM DRAINAGE AND UTILITY NOTES

ALL CONSTRUCTION SHALL BE IN ACCORDANCE WITH THE CURRENT TOWN OF KNIGHTDALE, CITY OF RALEIGH PUBLIC UTILITIES, AND NCDOT (WHERE APPLICABLE) ENGINEERING DESIGN AND CONSTRUCTION STANDARDS

Town Certification. This design has been reviewed by the Engineer for the Town of Knightdale, and to the best of my knowledge and belief, it conforms to the requirements established in the Standard Specifications of the Town of Knightdale.
By: _____ Date: _____
Town Engineer
These plans are approved by the Town of Knightdale and serve as construction plans for this project.
By: _____ Date: _____
Administrator

FINAL DRAWING - RELEASED FOR CONSTRUCTION

MCADAMS
The John R. McAdams Company, Inc.
2905 Meridian Parkway
Durham, NC 27713

phone 919. 361. 5000
fax 919. 361. 2269
license number: C-0293, C-187

www.mcadamsco.com

CLIENT

ALLIANCE GROUP OF NC, LLC
7208 FALLS OF NEUSE RD, SUITE 101
RALEIGH, NORTH CAROLINA 27615
JACOB ANDERSON
PHONE: 919. 239. 9486

AGNC

DOWNTOWN NORTH AT KNIGHTDALE STATION
CONSTRUCTION DRAWINGS - PHASE 1
N SMITHFIELD ROAD
KNIGHTDALE, NORTH CAROLINA

REVISIONS

NO.	DATE	
1	----	----
2	----	----
3	----	----
4	----	----
5	----	----
6	----	----

PLAN INFORMATION

PROJECT NO.	AGN-21002
FILENAME	AGN21002-LS1
CHECKED BY	XXX
DRAWN BY	XXX
SCALE	N.T.S.
DATE	02. 16. 2024

SHEET

LANDSCAPE DETAILS

L5.06

M:\Projects\AGN\AGN21002\04-Production\Engineering\Current Drawings\Construction Drawings Sets\Phase-1\AGN21002-LS1.dwg, 2/19/2024 4:53:33 PM, Mark Shawl

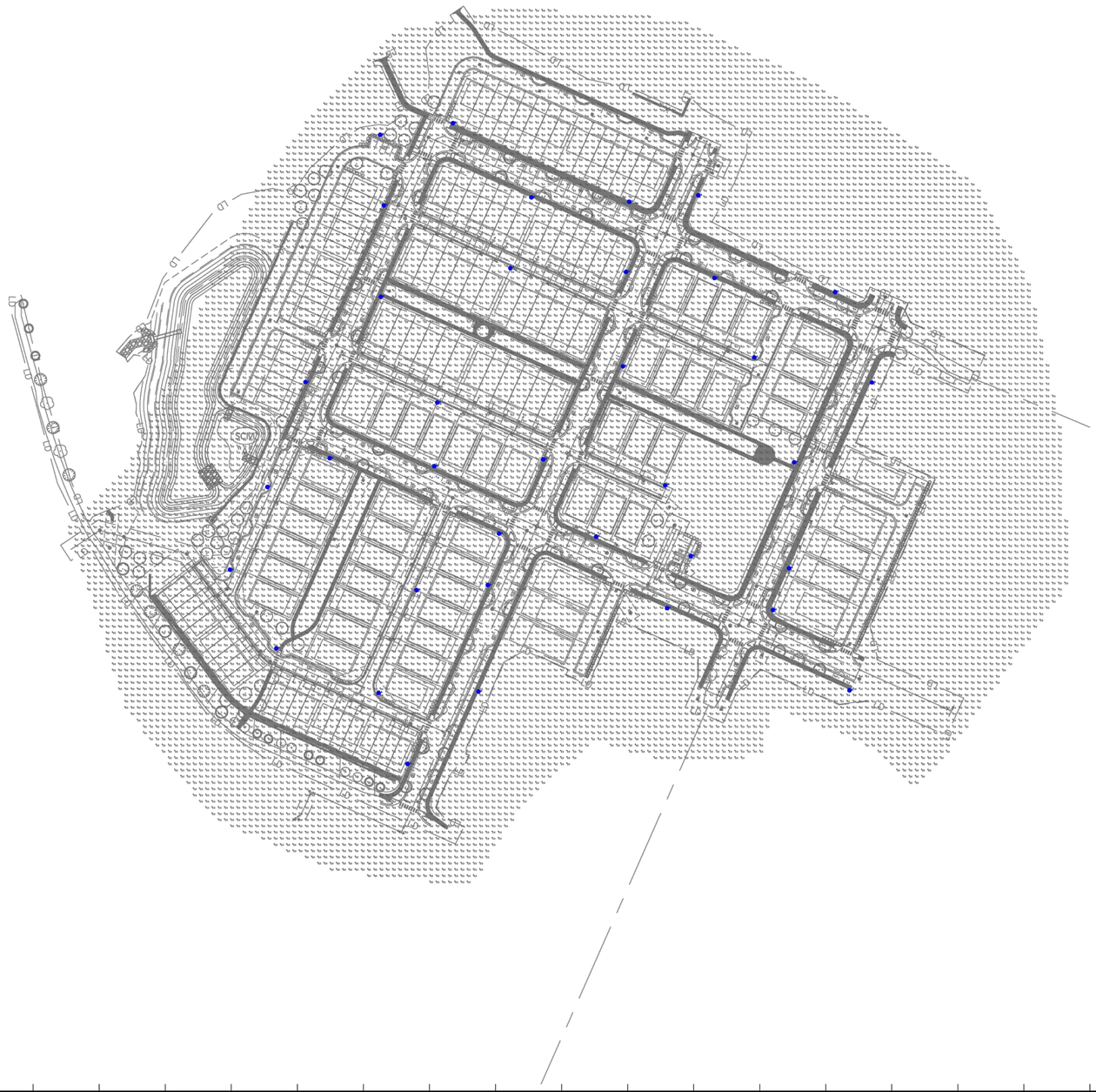

Outdoor Lighting

ENTERPRISE LED
(Meets Dark Sky Criteria)

LED (Light-emitting diode)	50 | 150 | 220 watts
Mounting height	12' – 30'
Color	Black
Pole	Smooth round concrete Fluted concrete Fiberglass Decorative aluminum
Applications	Neighborhoods Parks Pathways/walkways Shopping centers Streets

Light source: LED (white)
Wattage: 50 | 150 | 220 watts
Lumens: 4,525 (50W) | 15,090 (150W) | 21,500 (220W)
Light pattern: Type III (50W) / Type IV (150W | 220W),
Type V (150W | 220W)
IESNA cutoff classification: Full-cutoff
BUG rating:
50W Type III = B1U0G1 / B1U0G2
150WType III = B2U0G3 / Type IV = B3U0G3 / Type V = B4U0G2 / B5U0G3
220W Type III = B3U0G4 / Type IV = B3U0G4 / Type V = B5U0G3
Color temperature: 3,000K | 4,000K

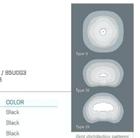

light distribution patterns

POLE AVAILABLE	MOUNTING HEIGHT	COLOR
Smooth round concrete	12', 16'	Black
Fluted concrete	13'	Black
Fiberglass	16'	Black
Decorative aluminum	12', 16'	Black

FEATURES	BENEFITS
Turnkey operation	Provides hassle-free installation and service
Little or no installation cost	Frees up capital for other projects
Design services by lighting professionals included	Meets industry standards and lighting ordinances
Maintenance, electricity & warranty included	Eliminates high and unexpected repair bills
One low monthly cost on your electric bill	Convenience and savings for you

For additional information, contact
us at GOELiteUnion@duke-energy.com.

DUKE ENERGY. PROGRESS

EXCELLENCE + DELIVERED. EVERYDAY PURPOSE™

©2022-2023 Duke Energy Corporation 2020R06-DEP 02/22

ISOFOOTCANDLE CURVES

FIXTURE: LED 50w ENTERPRISE
MOUNTING HEIGHT: 16 FT
LIGHT SOURCE: LED, 3000K
LUMENS = 4540
PATTERN: TYPE III, B2-U0-G2(zero light at or above 90 degrees)

POLE ASSY # LPOLE-DB-FG-20FT-BLK-___-P
ASSY # LFIX-ENTP-LED-50-BLK-III-3000K-___-P

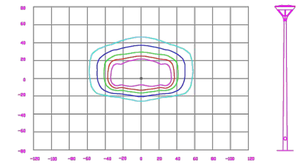

LEGEND (OUTER to INNER): 0.10 , 0.25 , 0.50 , .75 , 1.00

Town Certification. This design has been reviewed by the Engineer for the Town of Knightdale, and to the best of my knowledge and belief, it conforms to the requirements established in the Standard Specifications of the Town of Knightdale.
By: _____ Date: _____
Town Engineer
These plans are approved by the Town of Knightdale and serve as construction plans for this project.
By: _____ Date: _____
Administrator

Schedule

Symbol	Label	Quantity	Description	Number Lamps	Lumens Per Lamp	Light Loss Factor
	A	34	LED 50w Enterprise - Type III - 3000K - - Street	16	283	0.85
	B	2	LED 50w Enterprise - Type III - 3000K - - Parking	16	283	0.85

NO.	DATE	REVISION	BY
Rev B	01/31/24	TOWN REQUESTED LIGHTING IN "ALLEYS"	

L6.00

DISTANCE CALIBRATION (INCHES)
0 0.5 1.0 2.0 3.0 4.0

LIGHTING DESIGN TOLERANCE

The calculated footcandle light levels in this lighting design are predicted values and are based on specific information that has been supplied to Duke Energy. Any inaccuracies in the supplied information, differences in luminaire installation, lighted area geometry including elevation differences, reflective properties of surrounding surfaces, obstructions (foliage or otherwise) in the lighted area, or lighting from sources other than listed in this design may produce different results from the predicted values. Normal tolerances of voltage, lamp output, and ballast and luminaire manufacture will also affect results.

DUKE ENERGY® PROGRESS

PROPRIETARY & CONFIDENTIAL

This document together with the concepts and designs presented herein, presented as an instrument of service, is the sole property of Duke Energy, and is intended only for the specific purpose and prospective client as stated in the title block of this drawing. Any use, copying, reproduction or disclosure of the drawing, design or any information contained herein by the prospective customer or other entities, including without limitation, architects, engineers, or equipment manufacturers is hereby expressly prohibited and shall not be permitted absent prior written consent from, and payment of compensation to Duke Energy. Duke Energy disclaims any liability or responsibility for any unauthorized use of or reliance on this document.

DOWNTOWN NORTH
Knightdale, NC
SITE LIGHTING ARRANGEMENT

Designed by DUKE ENERGY PROGRESS LIGHTING SOLUTIONS
Reviewed by N. Johnson Scale 1" = 100'
Date 01/31/2024 Size Drawing size "D"
Description LED Enterprise
Drawing No. 23-0419B Sht. 1 OF 1