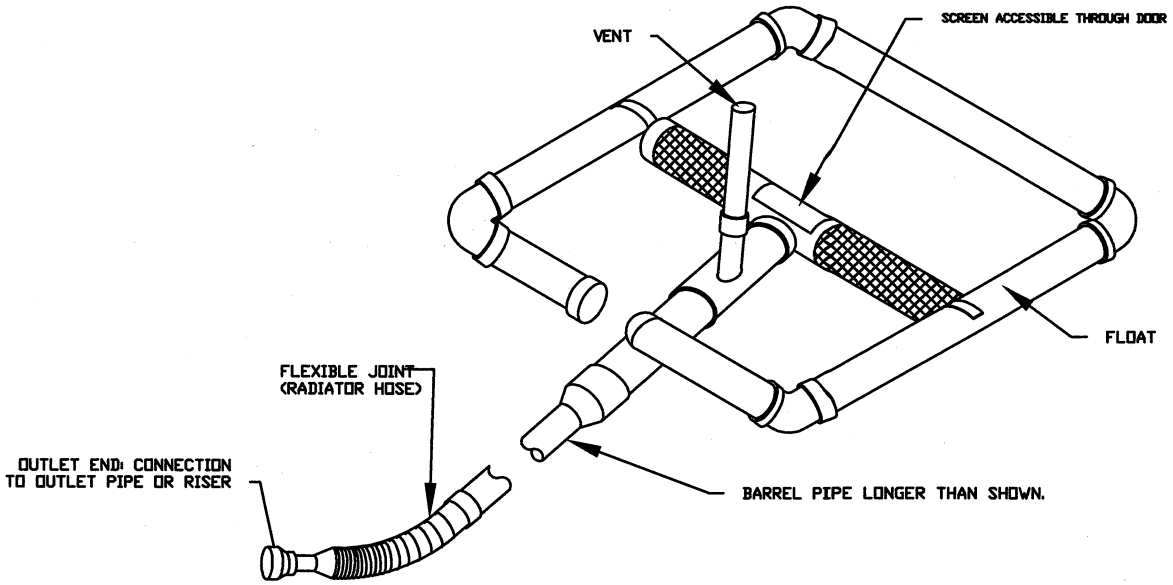

WAKE COUNTY
NORTH CAROLINA

EFFECTIVE: 01/31/08

STANDARD SKIMMER DETAIL